Installation Manual

Installation and Appliance Setup

INSTALLER: Leave this manual with party responsible for use and operation.
OWNER: Retain this manual for future reference.

***NOTICE: DO NOT** discard this manual!*

HEARTH & HOME technologies®

Models:

LCOR-DV36IN
RCOR-DV36IN

GAS-FIRED
C UL US
LISTED

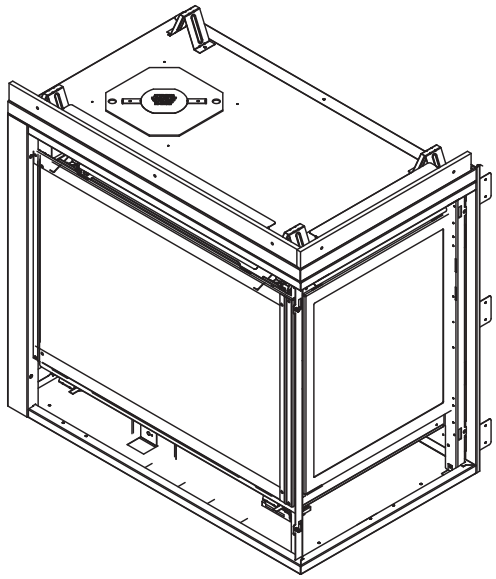

This appliance may be installed as an OEM installation in manufactured home (USA only) or mobile home and must be installed in accordance with the manufacturer's instructions and the *Manufactured Home Construction and Safety Standard, Title 24 CFR, Part 3280* in the United States, or the *Standard for Installation in Mobile Homes, CAN/CSA Z240 MH Series,* in Canada.

This appliance is only for use with the type(s) of gas indicated on the rating plate. This appliance is not convertible for use with other gases, unless a certified kit is used.

⚠ WARNING:
FIRE OR EXPLOSION HAZARD
Failure to follow safety warnings exactly could result in serious injury, death, or property damage.

- **DO NOT** store or use gasoline or other flammable vapors and liquids in the vicinity of this or any other appliance.
- **What to do if you smell gas**
  - **DO NOT** try to light any appliance.
  - **DO NOT** touch any electrical switch. **DO NOT** use any phone in your building.
  - Leave the building immediately.
  - Immediately call your gas supplier from a neighbor's phone. Follow the gas supplier's instructions.
  - If you cannot reach your gas supplier, call the fire department.
- Installation and service must be performed by a qualified installer, service agency, or the gas supplier.

⚠ DANGER

HOT GLASS WILL CAUSE BURNS.

DO NOT TOUCH GLASS UNTIL COOLED.

NEVER ALLOW CHILDREN TO TOUCH GLASS.

A barrier designed to reduce the risk of burns from the hot viewing glass is provided with this appliance and must be installed for the protection of children and other at-risk individuals.

In the Commonwealth of Massachusetts installation must be performed by a licensed plumber or gas fitter.

See Table of Contents for location of additional Commonwealth of Massachusetts requirements.

Pour demander un exemplaire en français de ce Manuel du propriétaire, visitez www.heatnglo.com/translations.

Safety Alert Key:

- ***DANGER!*** *Indicates a hazardous situation which, if not avoided will result in death or serious injury.*
- ***WARNING!*** *Indicates a hazardous situation which, if not avoided could result in death or serious injury.*
- ***CAUTION!*** *Indicates a hazardous situation which, if not avoided, could result in minor or moderate injury.*
- ***NOTICE:*** *Used to address practices not related to personal injury.*

Note: *The term "recommend" or "recommended" does not indicate a requirement. It is a best practice suggested by Hearth & Home Technologies®.*

Table of Contents

Installation Standard Work Checklist 3

1 Product Specific and Important Safety Information

A. Appliance Certification 4
B. Glass Specifications 4
C. BTU Specifications 4
D. High Altitude Installations 4
E. Non-Combustible Materials Specification 4
F. Combustible Materials Specification 4
G. Electrical Codes 4
H. California 4
I. Requirements for the Commonwealth of Massachusetts . . 5

2 Getting Started

A. Design and Installation Considerations 6
B. Good Faith Wall Surface/TV Guidelines 6
C. Tools and Supplies Needed 6
D. Inspect Appliance and Components 7

3 Framing and Clearances

A. Appliance/Decorative Front Dimension Diagrams 8
B. Clearances to Combustibles 10
C. Constructing the Appliance Chase 12
D. Floor Protection 12

4 Termination Location and Vent Information

A. Vent Termination Minimum Clearances 13
B. Chimney Diagram 14
C. Approved Pipe 15
D. Use of Elbows 16
E. Measuring Standards 17
F. Vent Diagrams 17

5 Vent Clearances and Framing

A. Pipe Clearances to Combustibles 30
B. Wall Penetration Framing 30
C. Ceiling Firestop/Floor Penetration Framing 31
D. Install Attic Insulation Shield 31

6 Appliance Preparation

A. Vent Collar Preparation 32
B. Securing and Leveling the Appliance 34
C. Non-Combustible Material Installation 35

7 Venting and Chimneys

A. Assemble Vent Sections 36
B. Assemble Vent Sections 37
C. Assemble Slip Sections (SLP & DVP) 38
D. Secure the Vent Sections 38
E. Disassemble Vent Sections 39
F. Vertical Termination Requirements 40
G. Horizontal Termination Requirements 41

8 Electrical Information

A. General Information 43
B. IntelliFire Touch® Ignition System Wiring 44

9 Gas Information ➔

A. Fuel Conversion 47
B. Gas Pressure 47
C. Gas Connection and Gas Line Purging 47
D. High Altitude Installations 48
E. Air Shutter Setting 48

10 Finishing

A. Facing Material 49
B. Mantel and Wall Projections 50
C. Decorative Front Finishing 50

11 Appliance Setup

A. Remove Fixed Glass Assembly 51
B. Remove the Shipping Materials 51
C. Clean the Appliance 53
D. Glowing Ember Placement 54
E. Install the Log Assembly 55
F. Install Fixed Glass Assembly 57

12 Reference Materials

A. Vent Components Diagrams 58
B. Accessories 70

➔ = Contains updated information.

ATTENTION INSTALLER:
Follow this Standard Work Checklist

This standard work checklist is to be used by the installer in conjunction with, not instead of, the instructions contained in this installation manual.

Customer: _____
Lot/Address: _____
_____

Model (circle one): **LCOR-DV36IN**
RCOR-DV36IN

Date Installed: _____
Location of Fireplace: _____
Installer: _____
Dealer/Distributor Phone # _____
Serial #: _____

WARNING! Risk of Fire or Explosion! *Failure to install appliance according to these instructions could lead to a fire or explosion.*

Appliance Install	**YES**	**IF NO, WHY?**
Verified that the chase is insulated and sealed. (Pg. 12)	☐	_____
Required non-combustible board is installed. (Pg. 35)	☐	_____
Verified clearances to combustibles. (Pg. 10-12)	☐	_____
Fireplace is leveled and secured. (Pg. 34)	☐	_____
Venting/Chimney Section 7 (Pg 36-42)		
Venting configuration complies to vent diagrams.	☐	_____
Venting installed, locked and secured in place with proper clearance.	☐	_____
Firestops installed.	☐	_____
Attic insulation shield installed.	☐	_____
Exterior wall/Roof flashing installed and sealed.	☐	_____
Terminations installed and sealed.	☐	_____
Electrical Section 8 (Pg 43-46)		
Unswitched power (110-120 VAC) provided to the appliance.	☐	_____
Switch wires properly installed.	☐	_____
Gas Section 9 (Pg 47-48)		
Proper appliance for fuel type.	☐	_____
Was a conversion performed?	☐	_____
Leak check performed and inlet pressure verified.	☐	_____
Verified proper air shutter setting for installation type.	☐	_____
Finishing Section 10 (Pg 49-50)		
Combustible materials not installed in non-combustible areas.	☐	_____
Verified all clearances meet installation manual requirements.	☐	_____
Mantels and wall projections comply with installation manual requirements.	☐	_____
Appliance Setup Section 11 (Pg 51-57)		
All packaging and protective materials removed (inside & outside of appliance).	☐	_____
Refractories, logs, media and embers installed correctly.	☐	_____
Glass assembly installed and secured.	☐	_____
Accessories installed properly.	☐	_____
Mesh, doors, or decorative front properly installed.	☐	_____
Manual bag and all of its contents are removed from inside/under the appliance and given to party responsible for use and operation.	☐	_____
Started appliance and verified no gas leaks exist.	☐	_____

Hearth & Home Technologies recommends the following:
- Photographing the installation and copying this checklist for your file.
- That this checklist remain visible at all times on the appliance until the installation is complete.

Comments: Further description of the issues, who is responsible (Installer/ Builder/ Other Trades, etc) and corrective action needed _____
_____
_____

Comments Communicated to party responsible _____ by _____on _____
(Builder / Gen. Contractor/) (Installer) (Date)

➔ = Contains updated information.

2486-982B 12/24

1 Product Specific and Important Safety Information

A. Appliance Certification

MODELS: **LCOR-DV36IN, RCOR-DV36IN**

LABORATORY: **Underwriters Laboratories, Inc. (UL)**

TYPE: **Direct Vent Heater**

STANDARD: **CSA / ANSI Z21.88-2019 • CSA 2.33-2019**

This product is listed to ANSI standards for "Vented Gas Fireplace Heaters" and applicable sections of "Gas Burning Heating Appliances for Manufactured Homes and Recreational Vehicles", and "Gas Fired Appliances for Use at High Altitudes". Also Certified for Installation in a Bedroom or a Bedsitting Room.

NOTICE: *This installation must conform with local codes. In the absence of local codes you must comply with the National Fuel Gas Code, ANSI Z223.1-latest edition in the U.S.A. and the CAN/CGA B149 Installation Codes in Canada.*

NOT INTENDED FOR USE AS A PRIMARY HEAT SOURCE. This appliance is tested and approved as either supplemental room heat or as a decorative appliance. It should not be factored as primary heat in residential heating calculations.

B. Glass Specifications

Hearth & Home Technologies appliances manufactured with tempered glass may be installed in hazardous locations such as bathtub enclosures as defined by the Consumer Product Safety Commission (CPSC). The tempered glass has been tested and certified to the requirements of **ANSI Z97.1** and **CPSC 16 CFR 1202** (Safety Glazing Certification Council **SGCC# 1595** and **1597**. Architectural Testing, Inc. Reports **02-31919.01** and **02-31917.01**).

This statement is in compliance with **CPSC 16 CFR Section 1201.5** "Certification and labeling requirements" which refers to **15** U.S. Code **(USC) 2063** stating "…Such certificate shall accompany the product or shall otherwise be furnished to any distributor or retailer to whom the product is delivered."

Some local building codes require the use of tempered glass with permanent marking in such locations. Glass meeting this requirement is available from the factory. Please contact your dealer or distributor to order.

C. BTU Specifications

Models *(U.S. or Canada)*		Maximum Input BTU/h	Minimum Input BTU/h	Orifice Size (DMS)
LCOR-DV36IN (NG)	*(0-2000 FT)*	38,000	21,000	32
LCOR-DV36IN (Propane)	*(0-2000 FT)*	35,500	20,000	50
RCOR-DV36IN (NG)	*(0-2000 FT)*	38,000	21,000	32
RCOR-DV36IN (Propane)	*(0-2000 FT)*	35,500	20,000	50

D. High Altitude Installations

NOTICE: *If the heating value of the gas has been reduced, these rules do not apply. Check with your local gas utility or authorities having jurisdiction.*

When installing above 2000 feet elevation:

- In the USA: Reduce input rate 4% for each 1000 feet above 2000 feet.
- In CANADA: Input ratings are certified without a reduction of input rate for elevations up to 4500 feet (1370 m) above sea level. Please consult provincial and/or local authorities having jurisdiction for installations at elevations above 4500 feet (1370 m).

Check with your local gas utility to determine proper orifice size.

E. Non-Combustible Materials Specification

Material which will not ignite and burn. Such materials are those consisting entirely of steel, iron, brick, tile, concrete, slate, glass or plasters, or any combination thereof.

Materials that are reported as passing **ASTM E 136, Standard Test Method for Behavior of Materials in a Vertical Tube Furnace at 750 ºC** shall be considered non-combustible materials.

F. Combustible Materials Specification

Materials made of or surfaced with wood, compressed paper, plant fibers, plastics, or other material that can ignite and burn, whether flame proofed or not, or plastered or unplastered shall be considered combustible materials.

G. Electrical Codes

NOTICE: *This appliance must be electrically wired and grounded in accordance with local codes or, in the absence of local codes, with* **National Electric Code ANSI/NFPA 70-latest edition** *or the* **Canadian Electric Code CSA C22.1.**

- A 110-120 VAC circuit for this product must be protected with ground-fault circuit-interrupter protection, in compliance with the applicable electrical codes, when it is installed in locations such as in bathrooms or near sinks.

H. California

WARNING: This product and the fuels used to operate this product (liquid propane or natural gas), and the products of combustion of such fuels, can expose you to chemicals including benzene, which is known to the State of California to cause cancer and reproductive harm. For more information go to: www.P65Warnings.ca.gov.

Note: The following requirements reference various Massachusetts and national codes not contained in this document.

I. Requirements for the Commonwealth of Massachusetts

For all side wall horizontally vented gas fueled equipment installed in every dwelling, building or structure used in whole or in part for residential purposes, including those owned or operated by the Commonwealth and where the side wall exhaust vent termination is less than seven (7) feet above finished grade in the area of the venting, including but not limited to decks and porches, the following requirements shall be satisfied:

Installation of Carbon Monoxide Detectors

At the time of installation of the side wall horizontal vented gas fueled equipment, the installing plumber or gas fitter shall observe that a hard wired carbon monoxide detector with an alarm and battery back-up is installed on the floor level where the gas equipment is to be installed. In addition, the installing plumber or gas fitter shall observe that a battery operated or hard wired carbon monoxide detector with an alarm is installed on each additional level of the dwelling, building or structure served by the side wall horizontal vented gas fueled equipment. It shall be the responsibility of the property owner to secure the services of qualified licensed professionals for the installation of hard wired carbon monoxide detectors.

In the event that the side wall horizontally vented gas fueled equipment is installed in a crawl space or an attic, the hard wired carbon monoxide detector with alarm and battery back-up may be installed on the next adjacent floor level.
In the event that the requirements of this subdivision can not be met at the time of completion of installation, the owner shall have a period of thirty (30) days to comply with the above requirements; provided, however, that during said thirty (30) day period, a battery operated carbon monoxide detector with an alarm shall be installed.

Approved Carbon Monoxide Detectors

Each carbon monoxide detector as required in accordance with the above provisions shall comply with NFPA 720 and be ANSI/UL 2034 listed and IAS certified.

Signage

A metal or plastic identification plate shall be permanently mounted to the exterior of the building at a minimum height of eight (8) feet above grade directly in line with the exhaust vent terminal for the horizontally vented gas fueled heating appliance or equipment. The sign shall read, in print size no less than one-half (1/2) in. in size, **"GAS VENT DIRECTLY BELOW. KEEP CLEAR OF ALL OBSTRUCTIONS".**

Inspection

The state or local gas inspector of the side wall horizontally vented gas fueled equipment shall not approve the installation unless, upon inspection, the inspector observes carbon monoxide detectors and signage installed in accordance with the provisions of 248 CMR 5.08(2)(a)1 through 4.

Exemptions

The following equipment is exempt from 248 CMR 5.08(2)(a)1 through 4:

- The equipment listed in Chapter 10 entitled "Equipment Not Required To Be Vented" in the most current edition of NFPA 54 as adopted by the Board; and
- Product Approved side wall horizontally vented gas fueled equipment installed in a room or structure separate from the dwelling, building or structure used in whole or in part for residential purposes.

MANUFACTURER REQUIREMENTS

Gas Equipment Venting System Provided

When the manufacturer of Product Approved side wall horizontally vented gas equipment provides a venting system design or venting system components with the equipment, the instructions provided by the manufacturer for installation of the equipment and the venting system shall include:

- Detailed instructions for the installation of the venting system design or the venting system components; and
- A complete parts list for the venting system design or venting system.

Gas Equipment Venting System NOT Provided

When the manufacturer of a Product Approved side wall horizontally vented gas fueled equipment does not provide the parts for venting the flue gases, but identifies "special venting systems", the following requirements shall be satisfied by the manufacturer:

- The referenced "special venting system" instructions shall be included with the appliance or equipment installation instructions; and
- The "special venting systems" shall be Product Approved by the Board, and the instructions for that system shall include a parts list and detailed installation instructions.

A copy of all installation instructions for all Product Approved side wall horizontally vented gas fueled equipment, all venting instructions, all parts lists for venting instructions, and/or all venting design instructions shall remain with the appliance or equipment at the completion of the installation.

See Gas Connection section for additional Commonwealth of Massachusetts requirements.

2 Getting Started

A. Design and Installation Considerations

Hearth & Home Technologies direct vent gas appliances are designed to operate with all combustion air siphoned from outside of the building and all exhaust gases expelled to the outside. No additional outside air source is required.

Installation MUST comply with local, regional, state and national codes and regulations. Consult insurance carrier, local building inspector, fire officials or authorities having jurisdiction over restrictions, installation inspection and permits.

Before installing, determine the following:

- Where the appliance is to be installed.
- The vent system configuration to be used.
- Gas supply piping requirements.
- Electrical wiring requirements.
- Framing and finishing details.
- Whether optional accessories—devices such as a fan, wall switch, or remote control—are desired.

Installation and service of this appliance should be performed by qualified personnel. Hearth & Home Technologies recommends HHT Factory Trained or NFI certified professionals.

hearthED FACTORY TRAINING Fuel Your Fire

NFI NATIONAL FIREPLACE INSTITUTE® A CERTIFICATION AGENCY

Improper installation, adjustment, alteration, service or maintenance can cause injury or property damage. For assistance or additional information, consult a qualified service technician, service agency or your dealer.

B. Good Faith Wall Surface/TV Guidelines

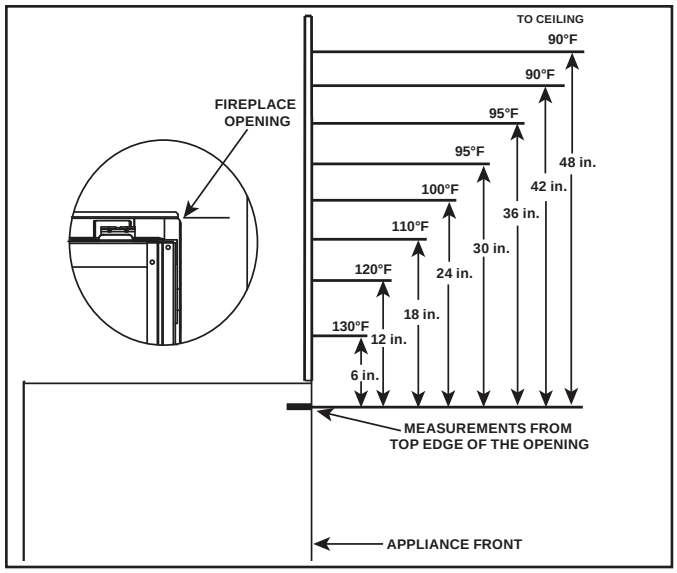

Figure 2.1 Good Faith Wall Surface Temperatures Above Appliance

NOTICE: *Temperatures listed above are taken with a temperature measuring probe as prescribed by the test standard used for appliance certification. Temperatures on walls or mantels taken with an infrared thermometer may yield increased temperatures of up to 30 degrees or more depending on the thermometer settings and material characteristics being measured.*

C. Tools and Supplies Needed

Before beginning the installation be sure that the following tools and building supplies are available.

Tape measure	Framing material
Pliers	Hammer
Phillips screwdriver	Manometer
Gloves	Framing square
Voltmeter	Electric drill and bits (1/4 in.)
Plumb line	Safety glasses
Level	Reciprocating saw

Flat blade screwdriver

Non-corrosive leak check solution

1/2 - 3/4 in. length, #6 or #8 Self-drilling screws

Caulking material (300 ºF minimum continuous exposure rating)

One 1/4 in. female connection (for optional fan).

D. Inspect Appliance and Components

- Carefully remove the appliance and components from the packaging.
- The vent system components and decorative doors and fronts may be shipped in separate packages.
- If packaged separately, the log set and appliance grate must be installed.
- Report to your dealer any parts damaged in shipment, particularly the condition of the glass.
- **Read all of the instructions before starting the installation. Follow these instructions carefully during the installation to ensure maximum safety and benefit.**

WARNING! Risk of Fire or Explosion! *Damaged parts could impair safe operation.* ***DO NOT i****nstall damaged, incomplete or substitute components. Keep appliance dry.*

Hearth & Home Technologies disclaims any responsibility for, and the warranty will be voided by, the following actions:

- Installation and use of any damaged appliance or vent system component.
- Modification of the appliance or vent system.
- Installation other than as instructed by Hearth & Home Technologies.
- Improper positioning of the gas logs or the glass door.
- Installation and/or use of any component part not approved by Hearth & Home Technologies.

Any such action may cause a fire hazard.

WARNING! Risk of Fire, Explosion or Electric Shock! ***DO NOT*** *use this appliance if any part has been under water. Call a qualified service technician to inspect the appliance and to replace any part of the control system and/or gas control which has been under water.*

WARNING! Risk of Fire! *DO NOT remove refractory. Appliance could overheat!*

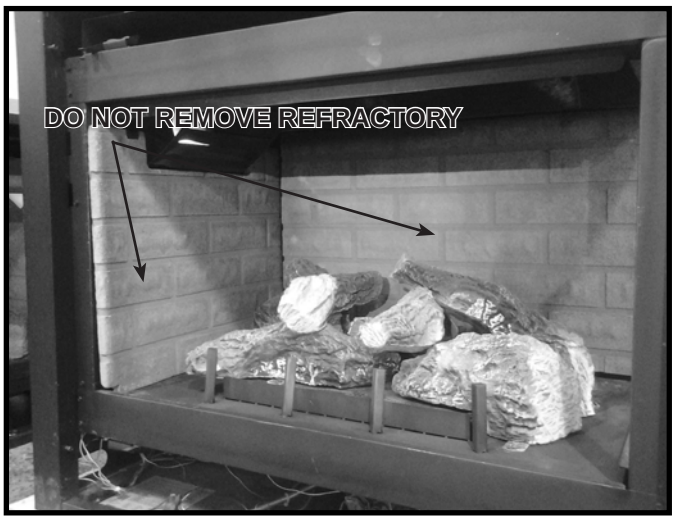

Figure 2.2 Do Not Remove Refractory

WARNING! Risk of Fire! *DO NOT remove standoff. Appliance could overheat!*

Figure 2.3 Do Not Remove Standoff

3 Framing and Clearances

A. Appliance/Decorative Front Dimension Diagrams

Dimensions are actual appliance dimensions. Use for reference only. For framing dimensions and clearances refer to Section 5.

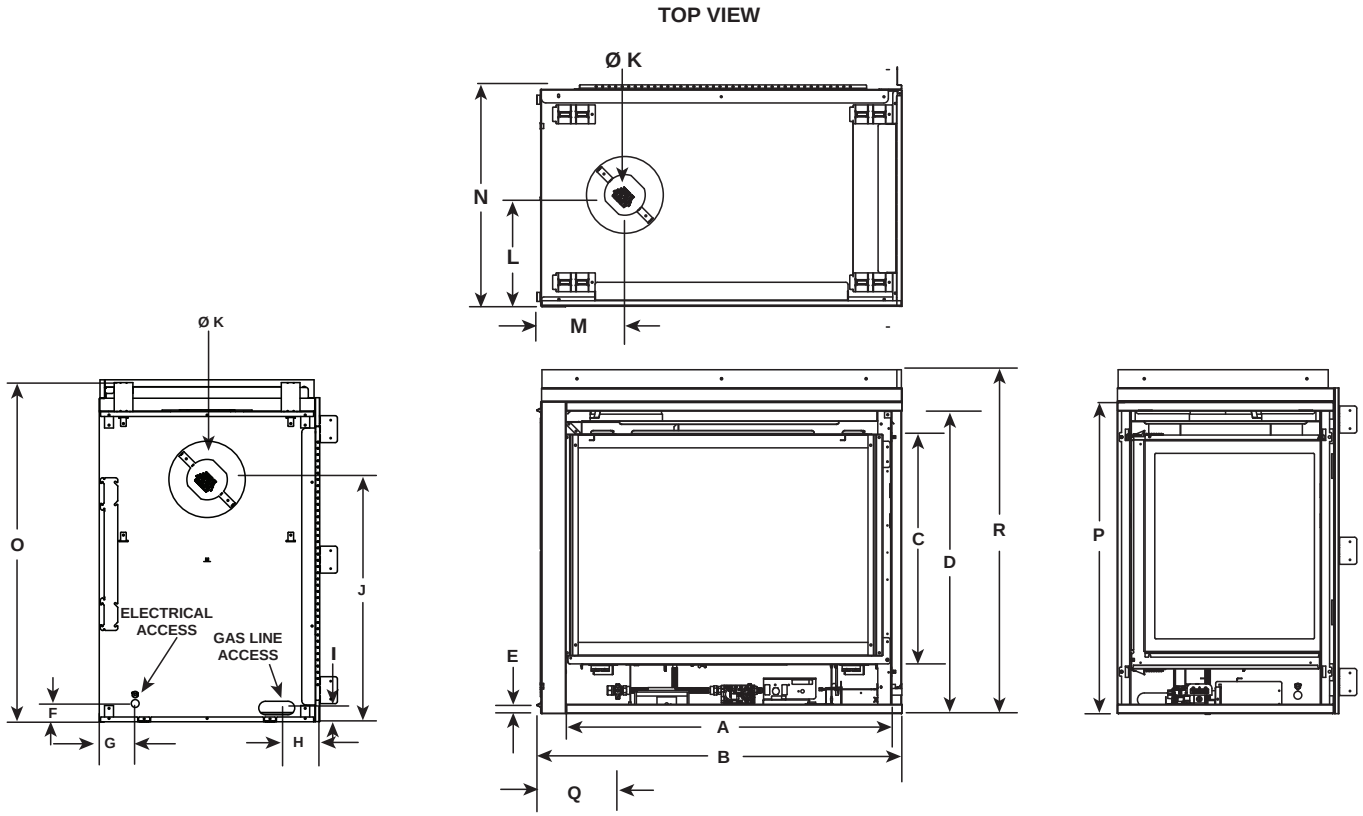

Location	Inches	Millimeters
A	36	914
B	40-1/2	1029
C	24-1/2	622
D	33-1/2	851
E	1	25
F	2-1/8	54
G	4-1/8	105
H	4-1/4	108
I	1-1/2	38

Location	Inches	Millimeters
J	27	686
K	8	203
L	12	305
M	9-1/2	241
N	24-1/2	622
O	38	965
P	34-5/8	880
Q	6	152
R	38-1/8	968

Figure 3.1 Appliance Dimensions - LCOR-DV36IN / RCOR-DV36IN (RCOR-DV36IN Shown)

DECORATIVE FRONT - COR-36BK
(Model: LCOR-DV36IN/RCOR-DV36IN)

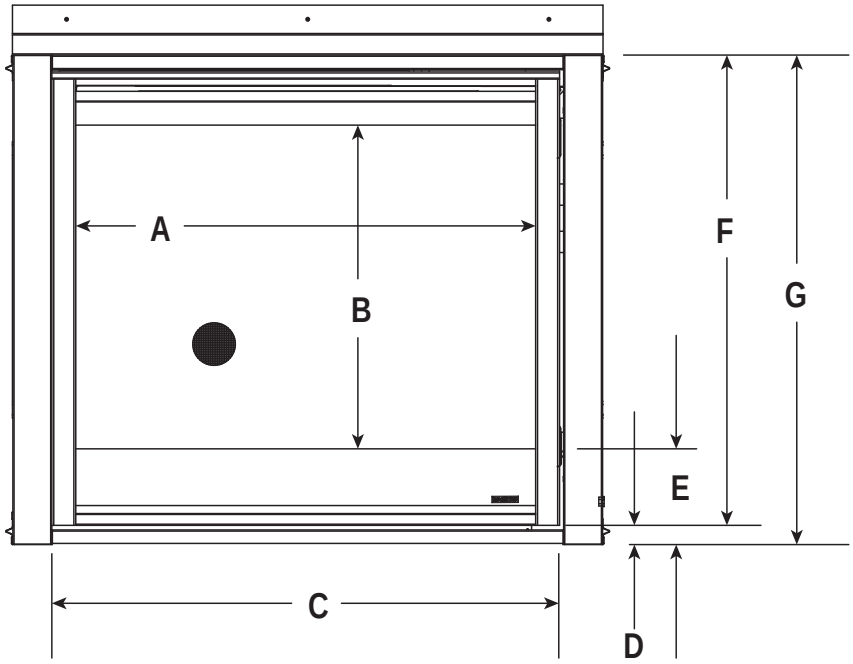

Location	COR-36BK	
	Inches	Millimeters
A	32-3/8	822
B	22-9/16	573
C	36-1/16	916
D	1-3/8	35
E	6-7/8	175
F	32-1/16	814
G	33-7/16	849

DECORATIVE FRONT - COREP-36BK
(Model: LCOR-DV36IN/RCOR-DV36IN)

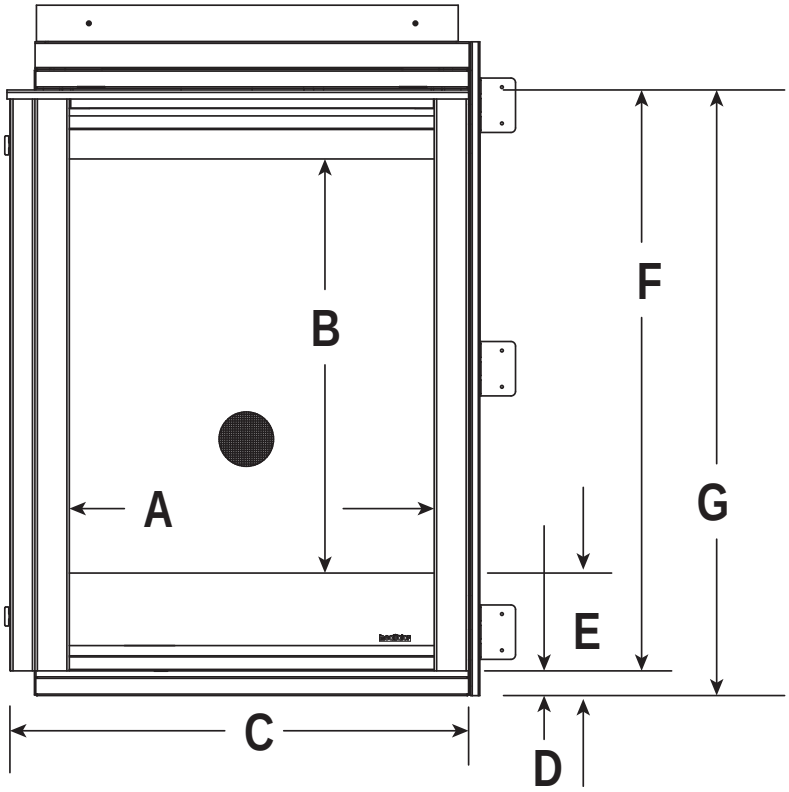

Location	COREP-36BK	
	Inches	Millimeters
A	20-1/8	511
B	22-1/16	560
C	25-5/16	643
D	1-3/8	35
E	6-7/8	175
F	32-1/16	814
G	33-7/16	849

Figure 3.2 Decorative Front Dimensions - COR-36BK and COREP-36BK

B. Clearances to Combustibles

When selecting a location for the appliance it is important to consider the required clearances to walls (see Figure 3.3).

WARNING! Risk of Fire or Burns! *Provide adequate clearance around air openings and for service access. Due to high temperatures, the appliance should be located out of traffic and away from furniture and draperies.*

NOTICE: *Illustrations reflect typical installations and are FOR DESIGN PURPOSES ONLY. Illustrations/diagrams are not drawn to scale. Actual installation may vary due to individual design preference.*

NOTICE: *This See-Through appliance is NOT designed or approved for an indoor/outdoor application.*

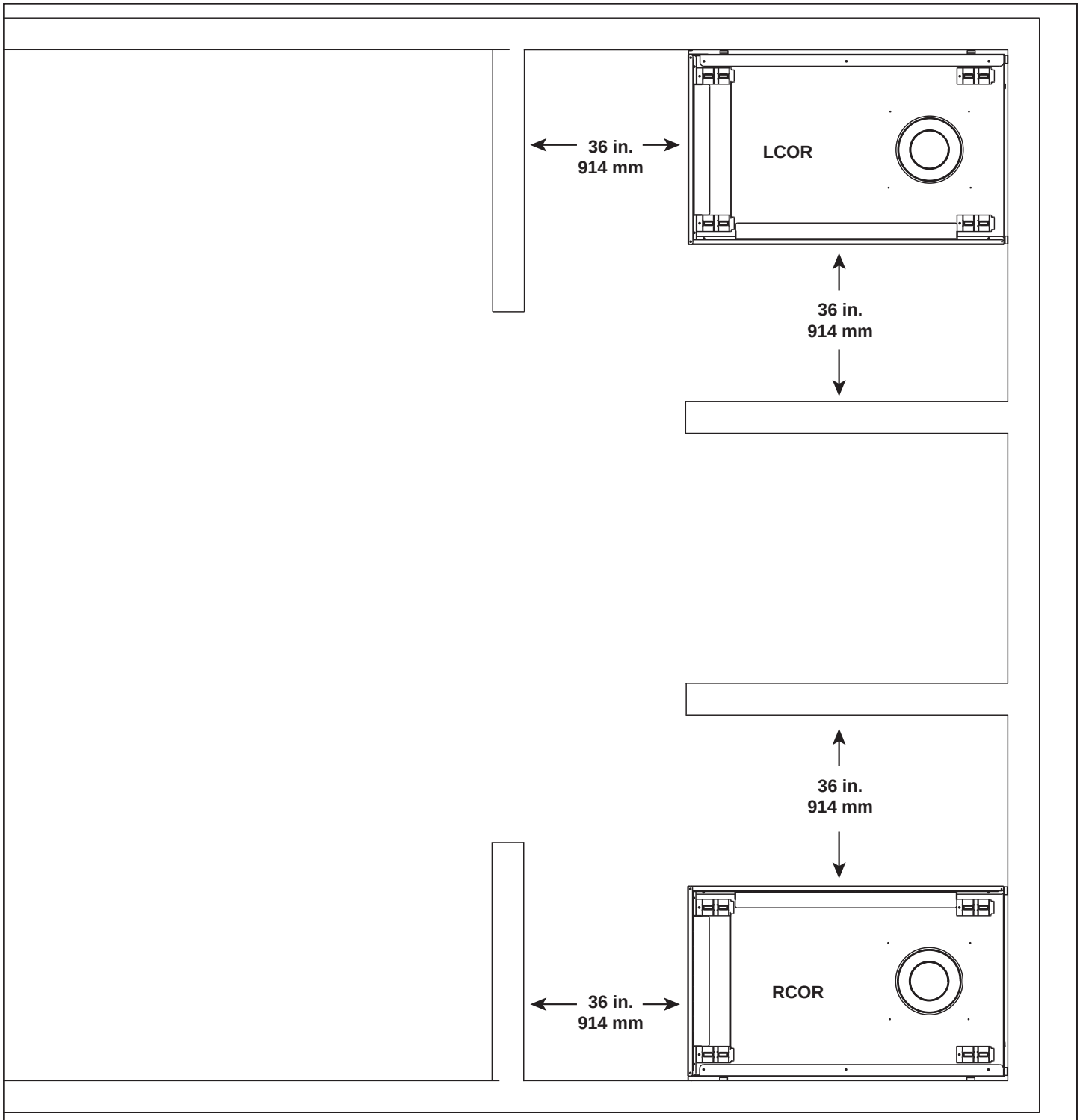

Figure 3.3 Appliance Locations

NOTICE: *Install appliance on hard metal or wood surfaces extending full width and depth.* ***DO NOT*** *install directly on carpeting, vinyl, tile or any combustible material other than wood.*

WARNING! Risk of Fire! *Maintain specified air space clearances to appliance and vent pipe:*

- Insulation and other materials must be secured to prevent accidental contact.
- The chase must be properly blocked to prevent blown insulation or other combustibles from entering and making contact with fireplace or chimney.
- Failure to maintain airspace may cause overheating and a fire.

NOTICE: *Illustrations reflect typical installations and are FOR DESIGN PURPOSES ONLY. Illustrations/diagrams are not drawn to scale. Actual installation may vary due to individual design preference.*

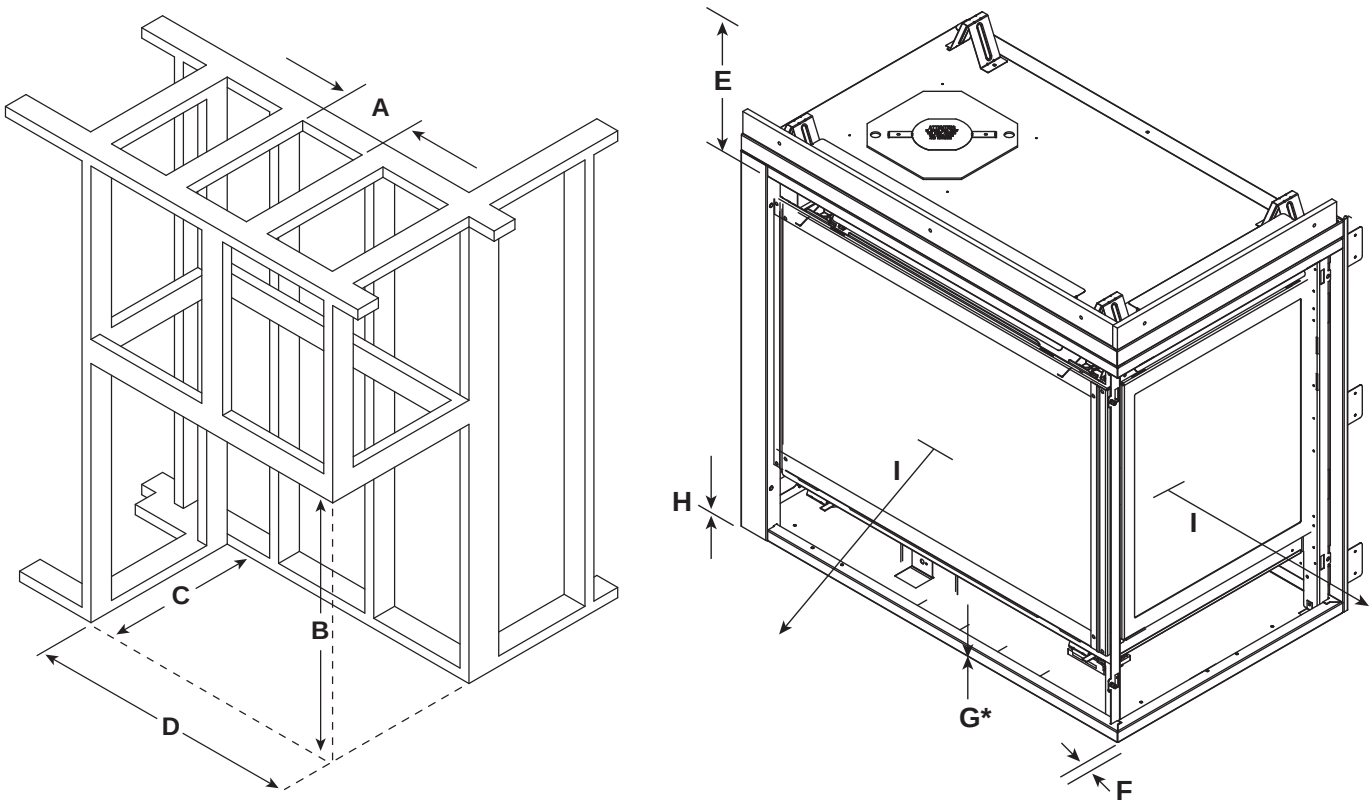

LCOR-DV36IN RCOR-DV36IN	A		B	C	D	E	F	G*	H	I
	DVP Pipe	SLP Pipe	Rough Opening (Height)	DVP Pipe*	Rough Opening (Width)	Clearance to Ceiling	Combustible Floor	Combustible Flooring	Ends of Appliance	Sides of Appliance
	Rough Opening (Width)	Rough Opening (Width)		Rough Opening (Depth)						
Inches	10	9	38-1/8	24	40	34-1/8	0	0	1/2	36
Millimeters	254	229	968	610	1016	867	0	0	13	914

Adjust framing dimensions for interior sheathing (such as sheetrock).
G* For installations with vinyl flooring, see Section 3.D.

Figure 3.4 Clearances to Combustibles - LCOR-DV36IN, RCOR-DV36IN

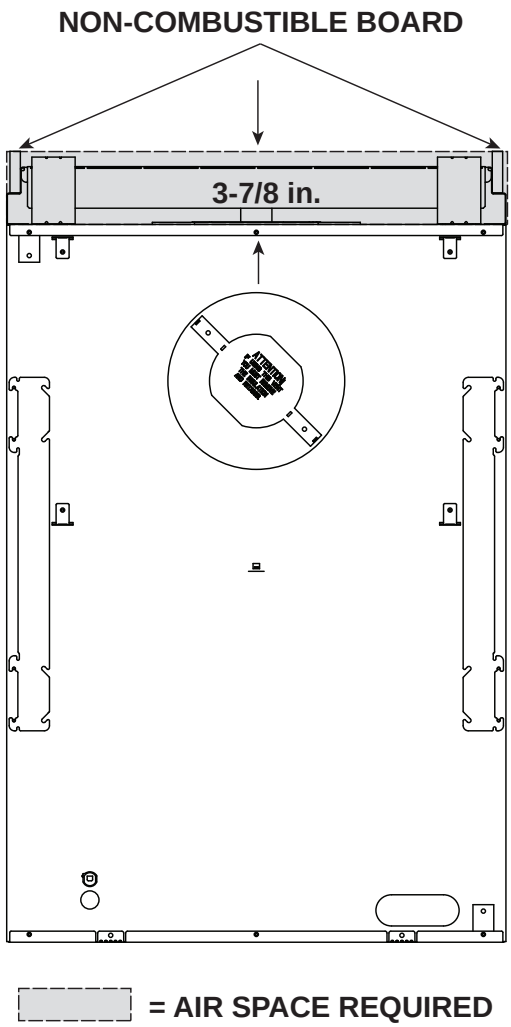

Figure 3.5 Non-Combustible Zone

C. Constructing the Appliance Chase

A chase is a vertical box-like structure built to enclose the gas appliance and/or its vent system. In cooler climates the vent should be enclosed inside the chase.

NOTICE: *Treatment of ceiling firestops and wall shield firestops and construction of the chase may vary with the type of building. These instructions are not substitutes for the requirements of local building codes. Therefore, you MUST check local building codes to determine the requirements to these steps.*

NOTICE: *When installing a sprinkler head in a fireplace chase, it is recommended to use a sprinkler head with a sprinkler activation temperature classified as Extra High. Keep sprinkler head away from vent and chimney.*

Chases should be constructed in the manner of all outside walls of the home to prevent cold air drafting problems. The chase should not break the outside building envelope in any manner.

Walls, ceiling, base plate and cantilever floor of the chase should be insulated. Vapor and air infiltration barriers should be installed in the chase as per regional codes for the rest of the home. Additionally, in regions where cold air infiltration may be an issue, the inside surfaces may be sheetrocked and taped (or an equivalent method may be used) to achieve maximum air tightness.

To further prevent drafts, the wall shield and ceiling firestops should be caulked with caulk with a minimum of 300 ºF continuous exposure rating to seal gaps. Gas line holes and other openings should be caulked with caulk with a minimum of 300 ºF continuous exposure rating or stuffed with unfaced insulation. If the appliance is being installed on a cement surface, a layer of plywood may be placed underneath to prevent conducting cold up into the room.

NOTICE: *Install appliance on hard metal or wood surfaces extending full width and depth.* ***DO NOT*** *install directly on carpeting, vinyl, tile or any combustible material other than wood.*

WARNING! Risk of Fire! *Maintain specified air space clearances to appliance and vent pipe:*

- Insulation and other materials must be secured to prevent accidental contact.
- The chase must be properly blocked to prevent blown insulation or other combustibles from entering and making contact with fireplace or chimney.
- Failure to maintain airspace may cause overheating and a fire.

D. Floor Protection

Vinyl Flooring

Vinyl flooring is sensitive to heat. Hearth and Home Technologies does not recommend adhesive based vinyl flooring due to thermal expansion. Floating-style flooring can be used, but will reach temperatures up to 110 °F in a room with ambient temperature of 70 °F. Consult flooring specifications to ensure compatibility.

4 Termination Location and Vent Information

A. Vent Termination Minimum Clearances

⚠ WARNING

Fire Risk.

Maintain vent clearance to combustibles as specified.

- **DO NOT** pack air space with insulation or other materials.

Failure to keep insulation or other materials away from vent pipe could cause overheating and fire.

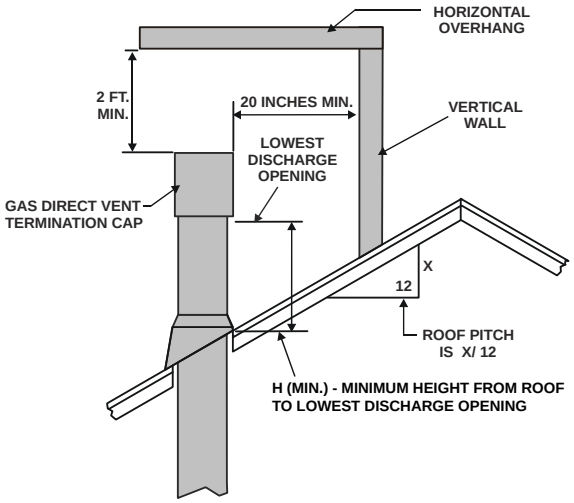

Roof Pitch	H (Min.) Ft.
Flat to 6/12	1.0*
Over 6/12 to 7/12	1.25*
Over 7/12 to 8/12	1.5*
Over 8/12 to 9/12	2.0*
Over 9/12 to 10/12	2.5*
Over 10/12 to 11/12	3.25
Over 11/12 to 12/12	4.0
Over 12/12 to 14/12	5.0
Over 14/12 to 16/12	6.0
Over 16/12 to 18/12	7.0
Over 18/12 to 20/12	7.5
Over 20/12 to 21/12	8.0

* H minimum may vary depending on regional snowfall. Refer to local codes.

Figure 4.1 Minimum Height From Roof to Lowest Discharge Opening

A	B
6 in. (minimum) up to 20 in. *152 mm/508 mm*	18 in. minimum *457 mm*
20 in. and over	0 in. minimum

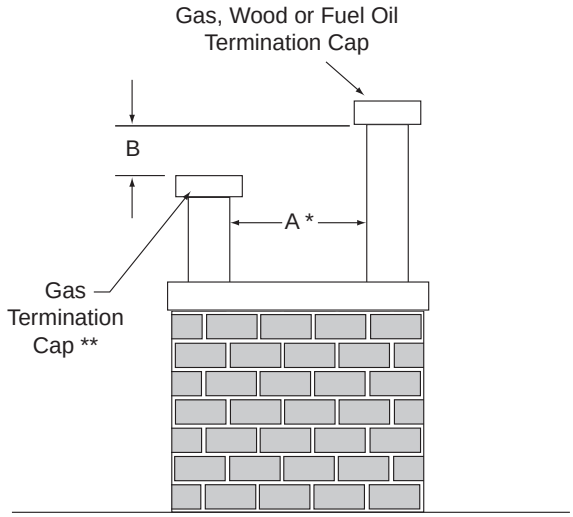

* If using decorative cap cover(s), this distance may need to be increased. Refer to the installation instructions supplied with the decorative cap cover.

** In a staggered installation with both gas and wood or fuel oil terminations, the wood or fuel oil termination cap must be higher than the gas termination cap.

Figure 4.2 Staggered Termination Caps

B. Chimney Diagram

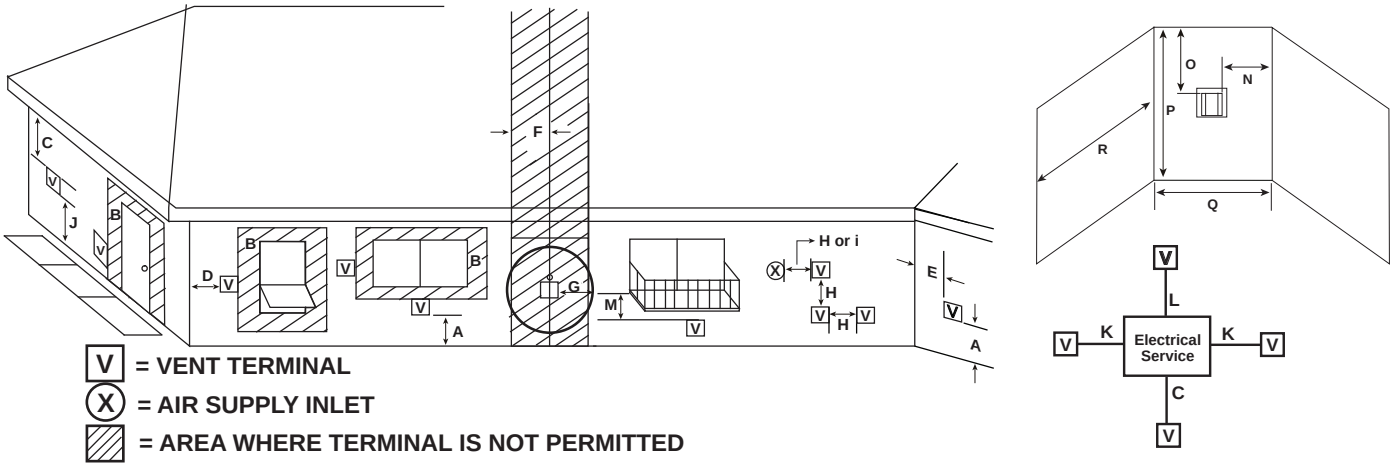

V = VENT TERMINAL

X = AIR SUPPLY INLET

= AREA WHERE TERMINAL IS NOT PERMITTED

A = 12 inches.....clearances above grade, veranda, porch, deck or balcony

B = 12 inches.....clearance to window or door that may be opened, or to permanently closed window

C = 18 inches.....clearance below unventilated soffit

18 inches.....clearance below ventilated soffit

30 inches.....clearance below vinyl soffits and electrical service

D = 6 inches.....clearance to outside corner

E = 6 inches.....clearance to inside corner

F = 3 ft. (Canada).....not to be installed above a gas meter/regulator assembly within 3 feet horizontally from the center-line of the regulator

G = 3 ft.....clearance to gas service regulator vent outlet

H = 12 inches.....clearance to non-mechanical (unpowered) air supply inlet, combustion air inlet or direct-vent termination

i = 3 ft. (U.S.A.)
6 ft. (Canada).....clearance to a mechanical (powered) air supply inlet

All mechanical air intakes within 10 feet of a termination cap must be a minimum of 3 feet below termination.

J = 7 ft. ..... On **public** property: clearance above paved sidewalk or a paved driveway.

A vent shall not terminate directly above a sidewalk or paved driveway which is located between two single family dwellings and serves both dwellings.

K = 6 inches.....clearance from sides of electrical service

L = 12 inches.....clearance above electrical service

Location of the vent termination must not interfere with access to the electrical service.

M = 18 inches ..... clearance under veranda, porch, deck, balcony or overhang

42 inches .....vinyl or composite overhang

Permitted when veranda, porch, deck or balcony is fully open on a minimum of 2 sides beneath the floor.

Figure 4.3 Minimum Clearances for Termination

Covered Alcove Applications

(Spaces open only on one side and with an overhang)

N = 6 inches ..... non-vinyl sidewalls

12 inches ..... vinyl sidewalls

O = 18 inches ..... non-vinyl soffit and overhang

42 inches ..... vinyl soffit and overhang

P = 8 ft.

	Q_{MIN}	R_{MAX}
1 cap	3 feet	2 x Q_{ACTUAL}
2 caps	6 feet	1 x Q_{ACTUAL}
3 caps	9 feet	2/3 x Q_{ACTUAL}
4 caps	12 feet	1/2 x Q_{ACTUAL}
Q_{MIN} = # termination caps x 3	R_{MAX} = (2 / # termination caps) x Q_{ACTUAL}	

H=Measure Horizontal Distances from H
V=Measure Vertical Distances from V

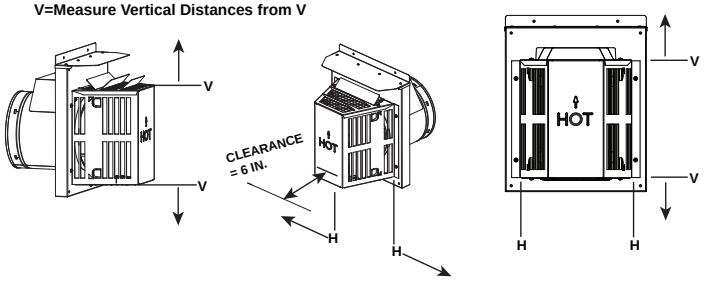

CAUTION! Risk of Burns! *Termination caps are HOT, consider proximity to doors, traffic areas or where people may pass or gather (sidewalk, deck, patio, etc.). Listed cap shields available. Contact your dealer.*

- Local codes or regulations may require different clearances.
- Vent system termination is **NOT** permitted in screened porches.
- Vent system termination is permitted in porch areas with two or more sides open.
- Hearth & Home Technologies assumes no responsibility for the improper performance of the appliance when the venting system does not meet these requirements.
- Vinyl protection kits are suggested for use with vinyl siding.

C. Approved Pipe

This appliance is approved for use with Hearth & Home Technologies DVP or SLP venting systems. Refer to Section 12.A for vent component information and dimensions.

Only use listed decorative termination caps/shrouds with Hearth & Home Technologies approved venting systems.

DO NOT mix pipe, fittings or joining methods from different manufacturers.

The pipe is tested to be run inside an enclosed wall. There is no requirement for inspection openings at each joint within the wall.

WARNING! Risk of Fire or Asphyxiation. *This appliance requires a separate vent.* ***DO NOT*** *vent to a pipe serving a separate solid fuel burning appliance.*

D. Use of Elbows

Diagonal runs have both vertical and horizontal vent aspects when calculating the effects. Use the rise for the vertical aspect and the run for the horizontal aspect. See Figure 4.4.

Two 45º elbows may be used in place of one 90º elbow. On 45º runs, one foot of diagonal is equal to 8-1/2 in. (216 mm) horizontal run and 8-1/2 in. (216 mm) vertical run. A length of straight pipe is allowed between two 45º elbows. See Figure 4.4.

Figure 4.5 shows the vertical and horizontal offsets for DVP or SLP elbows.

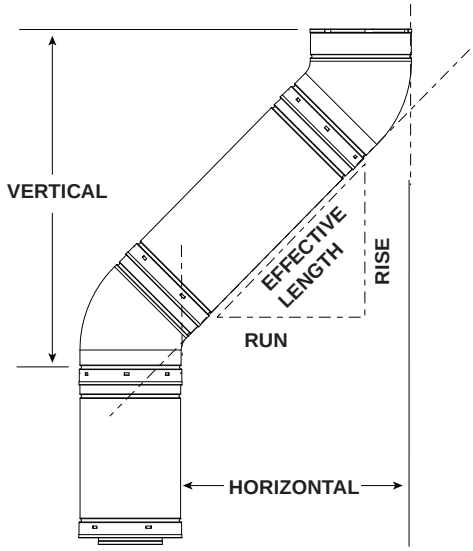

SLP Pipe	Effective Length		Rise/Run	
	Inches	Millimeters	Inches	Millimeters
SLP4	4	102	2-3/4	70
SLP6	6	152	4-1/4	108
SLP12	12	305	8-1/2	216
SLP24	24	610	17	432
SLP36	36	914	25-1/2	648
SLP48	48	1219	34	864
SLP6A	3 to 6	76 to 152	2-1/8-4-1/4	54-108
SLP12A	3 to 12	76 to 305	2-1/8-8-1/2	54-216

DVP Pipe	Effective Length		Rise/Run	
	Inches	Millimeters	Inches	Millimeters
DVP4	4	102	2-3/4	70
DVP6	6	152	4-1/4	108
DVP12	12	305	8-1/2	216
DVP24	24	610	17	432
DVP36	36	914	25-1/2	648
DVP48	48	1219	34	864
DVP6A	3 to 6	76 to 152	2-1/8-4-1/4	54-108
DVP12A	3 to 12	76 to 305	2-1/8-8-1/2	54-216

Figure 4.4

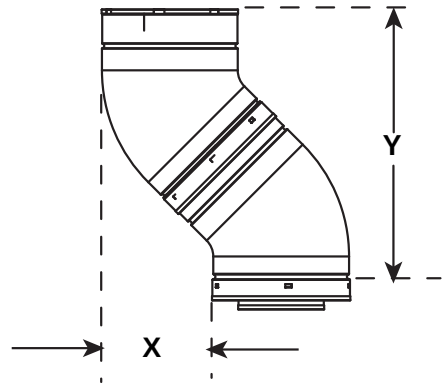

Vent Type	X		Y	
	Inches	Millimeters	Inches	Millimeters
DVP	6-5/8	168	16-1/2	419
SLP	5-1/4	133	11-3/8	289

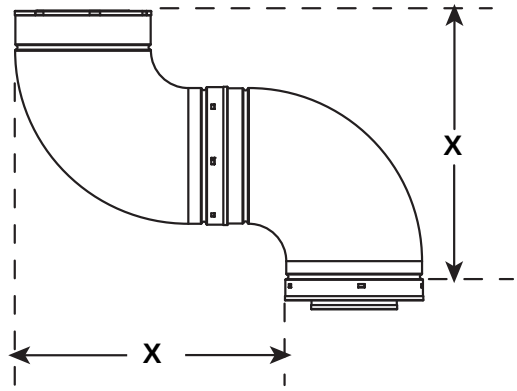

Vent Type	X	
	Inches	Millimeters
DVP	16-1/4	413
SLP	11-1/4	286

Figure 4.5 Vertical and Horizontal Offset for DVP and SLP Elbows

E. Measuring Standards

Vertical and horizontal measurements listed in the vent diagrams were made using the following standards:

- Pipe measurements are shown using the effective length of pipe. See Section 12.A (Figure 12.1 for DVP, Figure 12.8 for SLP) for information on effective length of pipe components.
- Horizontal terminations are measured to the outside mounting surface (flange of termination cap) (see Figure 4.6).
- Vertical terminations are measured to top of last section of pipe. See Figure 4.7.
- Horizontal pipe installed level with no rise.

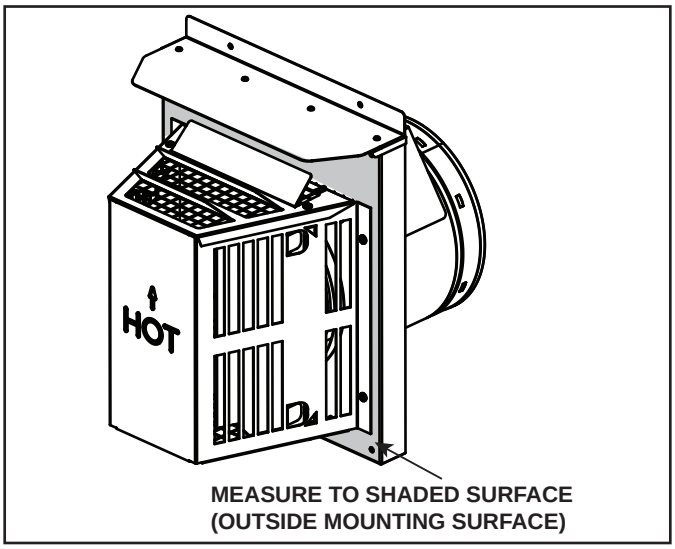

Figure 4.6 Measure to Outside Mounting Surface

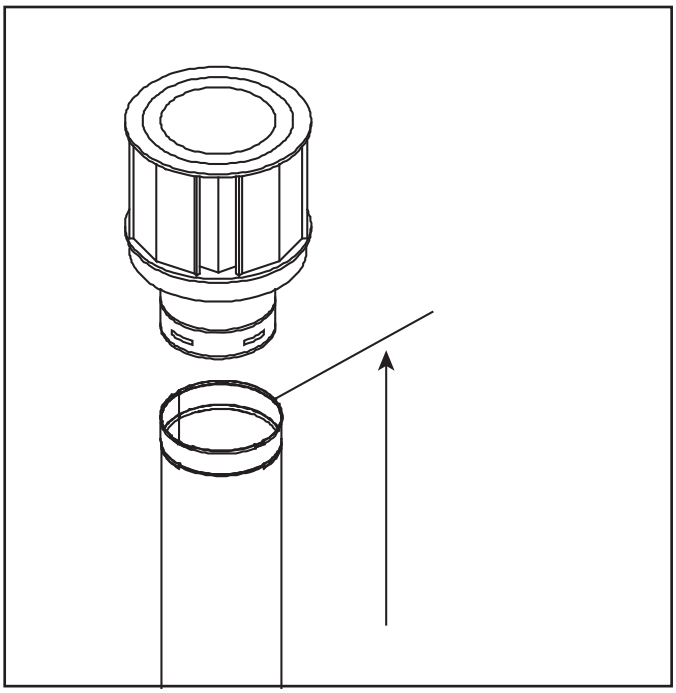

Figure 4.7. Measure to Top of Last Section of Pipe

F. Vent Diagrams

To replace the first starter elbow with two 45° elbows, refer to Figure 4.8. All other 90° elbows can be replaced with two 45° elbows.

General Rules:

- SUBTRACT 3 ft. from the total H measurement for each 90º elbow installed horizontally.
- SUBTRACT 1-1/2 ft. from the total H measurement for each 45º elbow installed horizontally.
- A maximum of three 90º elbows (or six 45º elbows) may be used in any vent configuration. Some elbows may be installed horizontally.
- Elbows may be placed back to back anywhere in the system.
- Any 90º elbow may be replaced with two back to back 45º elbows.
- When penetrating a combustible wall, a wall shield firestop must be installed.
- When penetrating a combustible ceiling, a ceiling firestop must be installed.
- Horizontal runs of vent do not require vertical rise; horizontal runs may be level.
- Horizontal termination cap should have a 1/4 inch downward slant to allow any moisture in cap to be released. See Figure 4.8.

Top Vent Horizontal Termination

Two 45° Elbows

Installation requirements to replace the first 90° elbow with two 45° elbows:

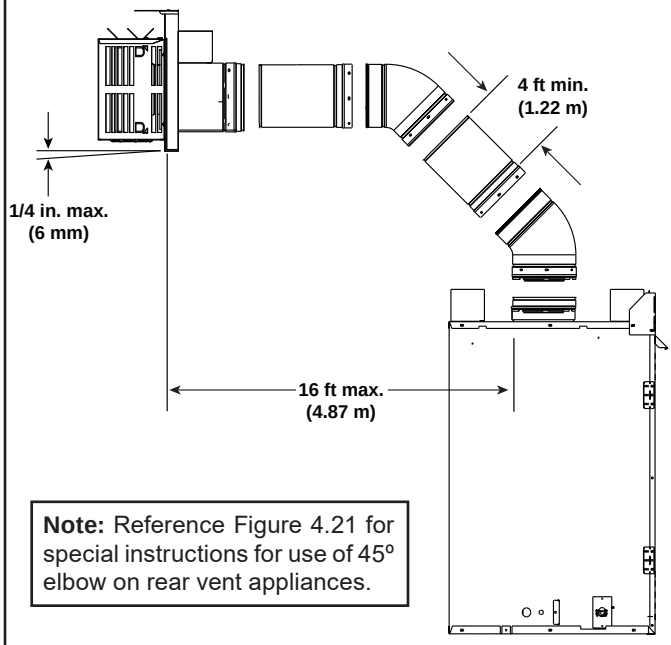

Note: Reference Figure 4.21 for special instructions for use of 45º elbow on rear vent appliances.

Figure 4.8

Note: The LCOR-DV36IN/RCOR-DV36IN can adapt to SLP series vent pipe, if desired.

When venting off the top of the unit, use a DVP-2SL adapter and a minimum 48 inch vertical section of SLP series vent pipe.

A DVP-SLP24 adapter may also be used with a 24 inch vertical section of SLP series vent pipe.

After the 48 inch vertical section, the venting table rules must be followed. The first 48 inch **vertical** section is NOT counted as part of the vertical components in the table. It is still counted as part of the overall maximum run. All venting table rules for the vent run must still be followed.

Example: DVP pipe 1 ft. min. vertical = 3 ft. max. horizontal
SLP pipe 5 ft. min. vertical = 3 ft. max. horizontal

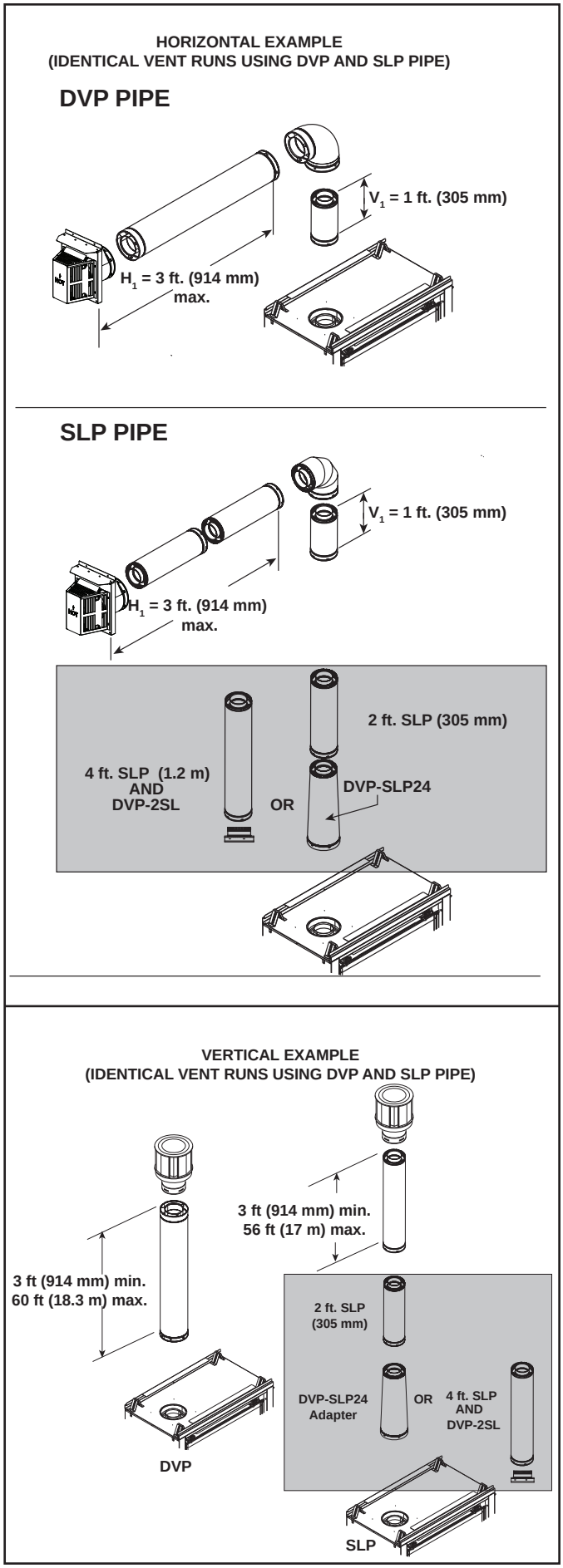

Figure 4.9 Adapt DVP Pipe to SLP Using DVP-SLP24 & DVP-2SL

One Elbow

V_1 Minimum		H_1 Maximum	
Elbow only		1-1/2 ft.	457 mm
6 in.	152 mm	2-1/2 ft.	610 mm
1 ft.	305 mm	3 ft.	914 mm
2 ft.	610 mm	6 ft	1.8 m
3 ft.	914 mm	9 ft.	2.7 m
4 ft.	1.2 m	12 ft.	3.7 m
5 ft.	1.5 m	15 ft.	4.6 m
6 ft.	1.8 m	18 ft.	5.5 m
$V_1 + H_1$ = 50 ft. (15.2 m) Maximum H_1 = 18 ft. (5.5 m) Maximum			

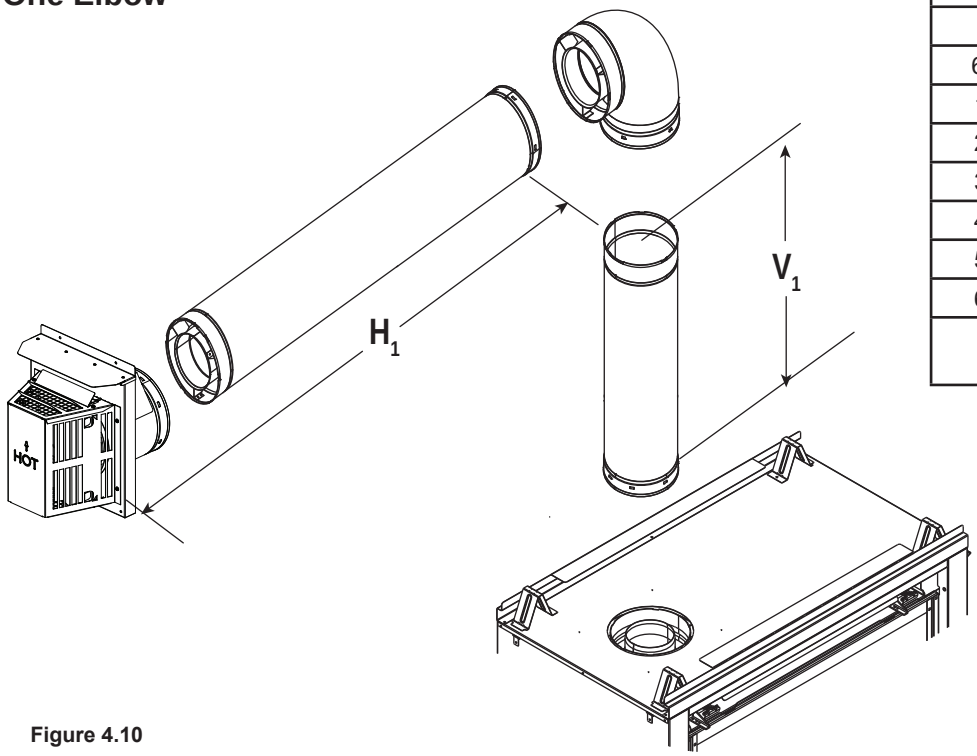

Figure 4.10

Two Elbows

V_1 Minimum		$H_1 + H_2$ Maximum	
Elbow only		6 in.	152 mm
1 ft.	305 mm	2 ft.	610 mm
2 ft.	610 mm	4 ft.	1.2 m
3 ft.	914 mm	9 ft.	2.7 m
4 ft	1.2 m	12 ft.	3.7 m
5 ft.	1.5 m	15 ft.	4.6 m
6 ft.	1.8 m	18 ft.	5.5 m
$V_1 + H_1 + H_2$ = 50 ft. (15.2 m) Maximum $H_1 + H_2$ = 18 ft. (5.5 m) Maximum			

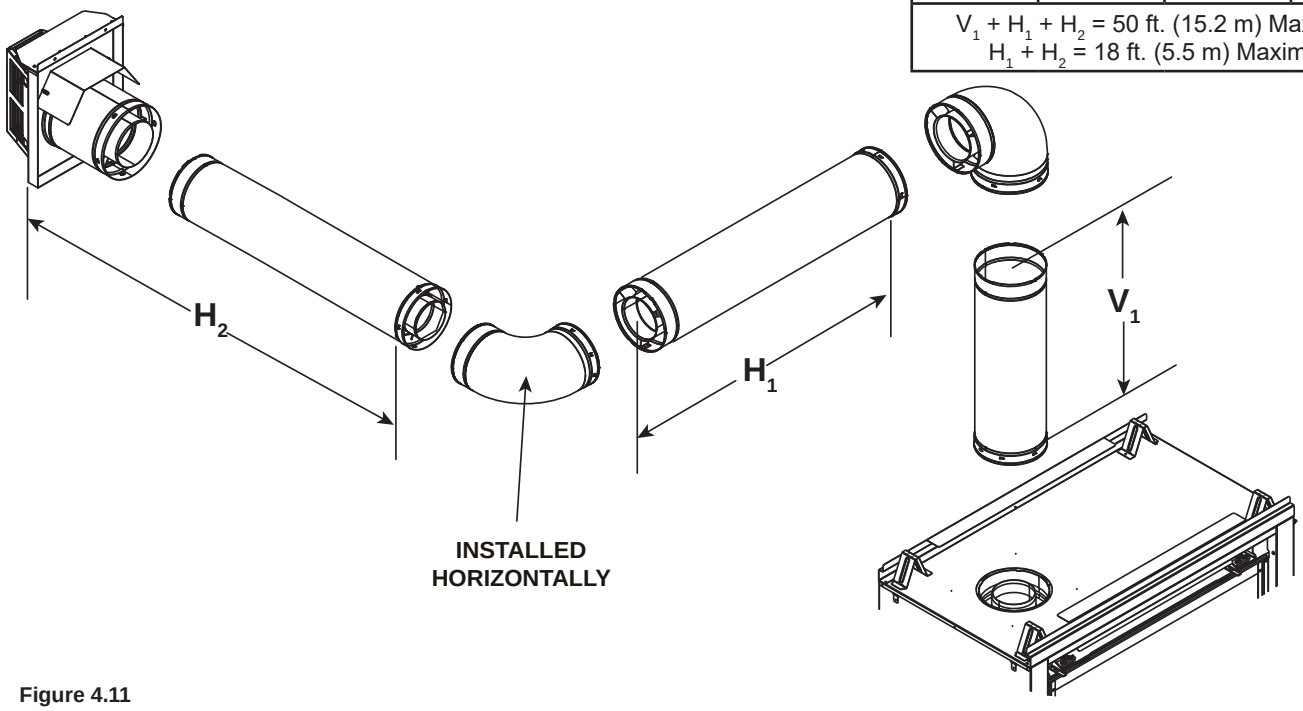

Figure 4.11

Top Vent - Horizontal Termination - (continued)

Three Elbows

V_1 Minimum		H_1 Maximum		V_2 Minimum		H_2 Maximum		$V_1 + V_2$ Minimum		$H_1 + H_2$ Maximum	
Elbow only		1 ft.	305 mm	6 in.	152 mm	1 ft.	305 mm	6 in.	152 mm	1 ft.	305 mm
6 in.	152 mm	3 ft.	914 mm	6 in.	152 mm	2 ft.	610 mm	1 ft.	305 mm	3 ft.	914 mm
1 ft.	305 mm	6 ft	1.8 m	1 ft.	305 mm	6 ft	1.8 m	2 ft.	610 mm	12 ft.	3.7 m
2 ft.	610 mm	10 ft.*	3 m	2 ft.	610 mm	10 ft.*	3 m	4 ft	1.2 m	18 ft.	5.5 m
3 ft.	914 mm	12 ft.*	3.7 m	3 ft.	914 mm	12 ft.*	3.7 m	6 ft	1.8 m	18 ft	5.5 m
*$H_1 + H_2$ = 18 ft. (5.5 m) Maximum $V_1 + V_2 + H_1 + H_2$ = 50 ft. (15.2 m) Maximum											

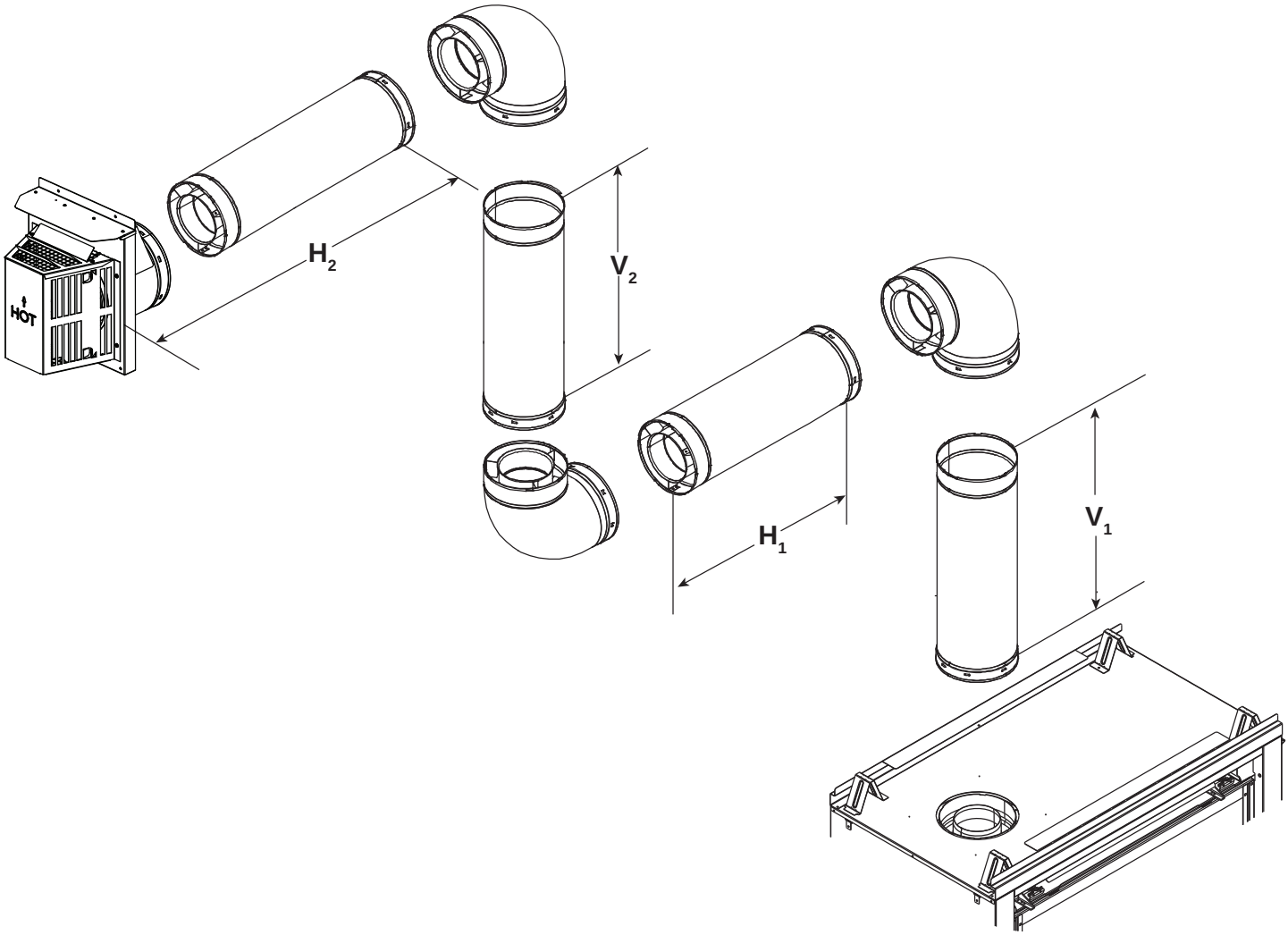

Figure 4.12

Top Vent - Horizontal Termination - (continued)

Three Elbows

V_1 Minimum		$H_1 + H_2 + H_3$ Maximum	
Elbow		not allowed	
6 in.	152 mm	not allowed	
1 ft.	305 mm	1 ft.	305 mm
2 ft.	610 mm	2 ft.	610 mm
3 ft.	914 mm	3 ft.	914 mm
4 ft.	1.2 m	4 ft.	1.2 m
5 ft.	1.5 m	5 ft.	1.5 m
6 ft.	1.8 m	6 ft.	1.8 m
$V_1 + H_1 + H_2 + H_3$ = 50 ft. (15.2 m) Maximum $H_1 + H_2 + H_3$ = 18 ft. (5.5 m) Maximum			

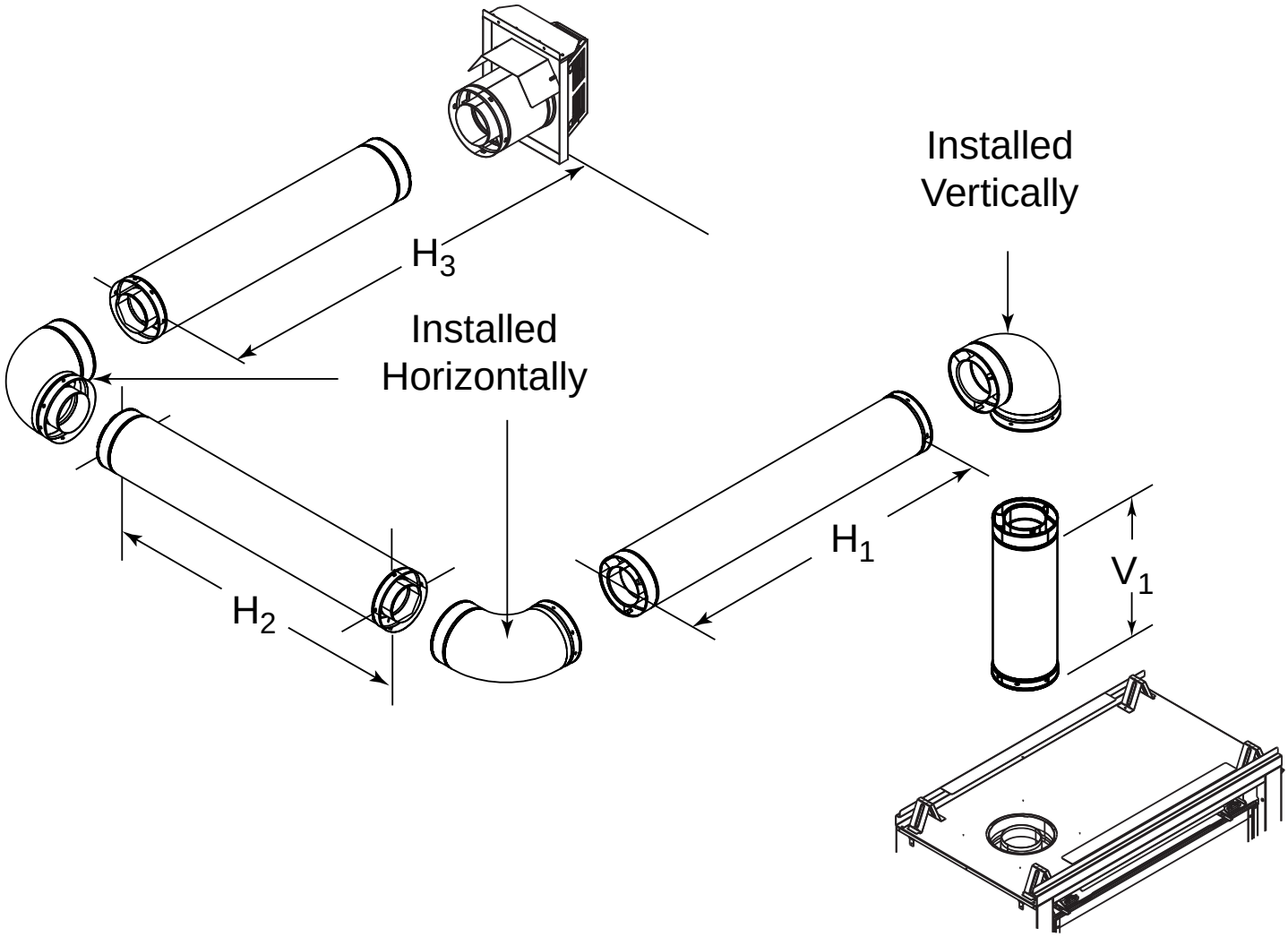

Figure 4.13

Top Vent - Vertical Termination

No Elbow

V_1 = 60 ft. Max. (18.3 m)
V_1 = 3 ft. Min. (914 mm)

NOTE: If installing a vertical vent/ termination off the top of the appliance, the optional vertical termination baffle should be used.

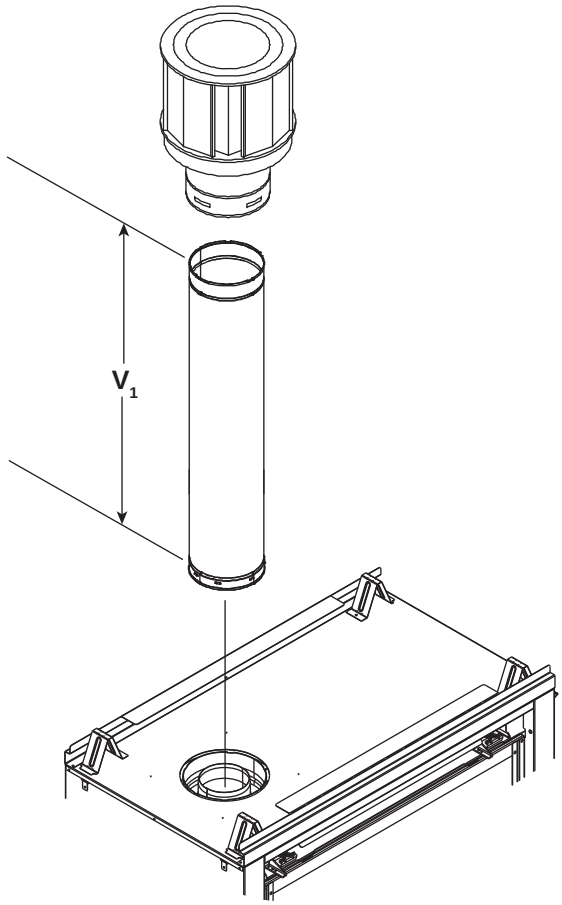

Figure 4.14

Exhaust restrictors are recommended for these vertically terminated products which have excessive draft. Exhaust restrictors will compensate for high draft, and restore visual flame height. If the vent configuration has a total vertical of 10-60 feet, an exhaust restrictor may be needed. The exhaust restrictor can be located in the appliance manual bag.

Exhaust restrictor Instructions

1. Remove fiber refractory panel and exhaust baffle from pilot side of appliance. To remove the exhaust baffle, remove the three screws securing it in place. See Figure 4.15.

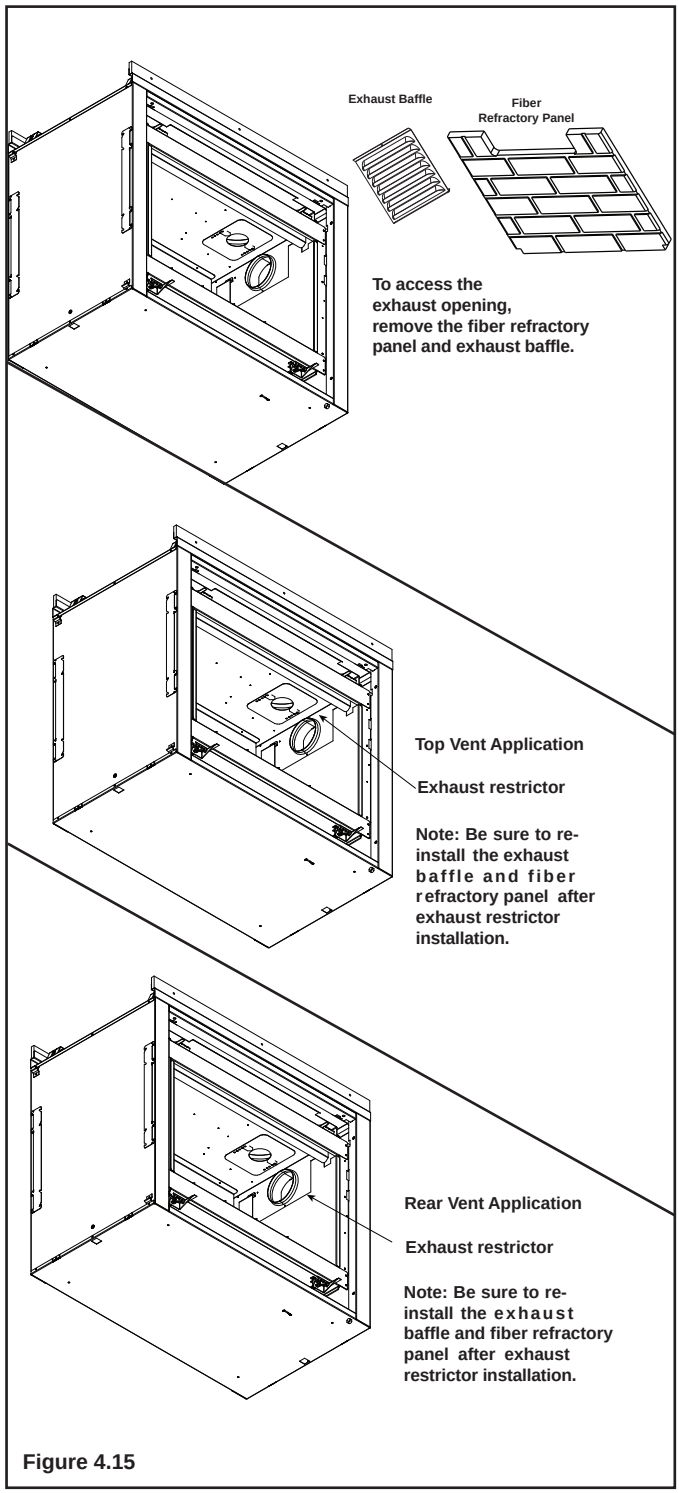

Figure 4.15

2. Break the exhaust restrictor into two pieces. Do this by bending the part back and forth until it breaks (see Figure 4.16).

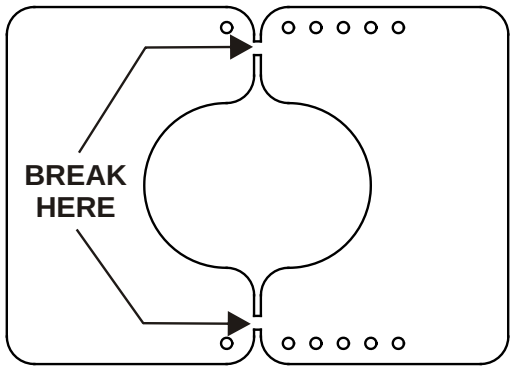

Figure 4.16 Exhaust Restrictor

3. Use Table 4.1 to match the amount of vertical you have in the system to find the appropriate position to set the exhaust restrictor. See Figure 4.17.

Vertical	TOP VENT		REAR VENT	
	NG	PROPANE	NG	PROPANE
10 ft.	1-1	1-1	1-1	1-1
20 ft.	2-2	2-2	2-2	2-2
30 ft.	2-2	2-2	2-2	2-2
40 ft.	3-3	3-3	3-3	3-3
50 ft.	3-3	3-3	3-3	3-3
60 ft.	3-3	3-3	3-3	3-3

Table 4.1

Note: If the DVP-2SL and DVP-SLP24 adapter and SLP pipe is used, you MUST subtract one number from the table above.

Example: Top vent 60 ft vertical with DVP pipe = 3-3
Top vent 60 ft vertical with SLP pipe = 2-2

4. Center the exhaust restrictor in the open end of the exhaust outlet and secure through the slots on the exhaust restrictor with the 2-1/4 in. self-tapping screws provided in the appliance manual bag.
5. Reinstall the exhaust baffle and the refractory panel.

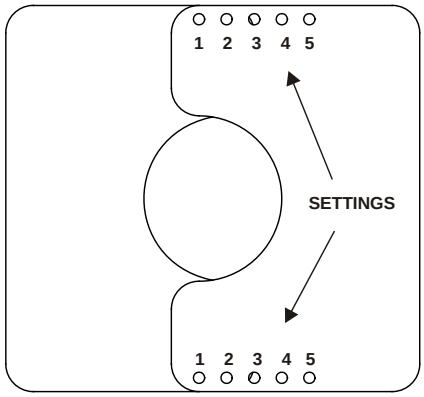

Figure 4.17

Top Vent - Vertical Termination - (continued)

Two Elbows

V_1		H_1 Maximum		V_2	$V_1 + V_2$ Minimum	
Elbow Only		2-1/2 ft.	762 mm	*	*	*
2 ft.	607 mm	6 ft.	1.8 m	*	*	*
4 ft.	1.2 m	12 ft.	3.7 m	*	*	*
6 ft.	1.8 m	18 ft.	5.5 m	*	*	*
$V_1 + V_2 + H_1$ = 50 ft (15.2 m) Maximum *No specific restrictions on this value EXCEPT $V_1 + V_2 + H_1$ cannot exceed 50 ft (15.2 m)						

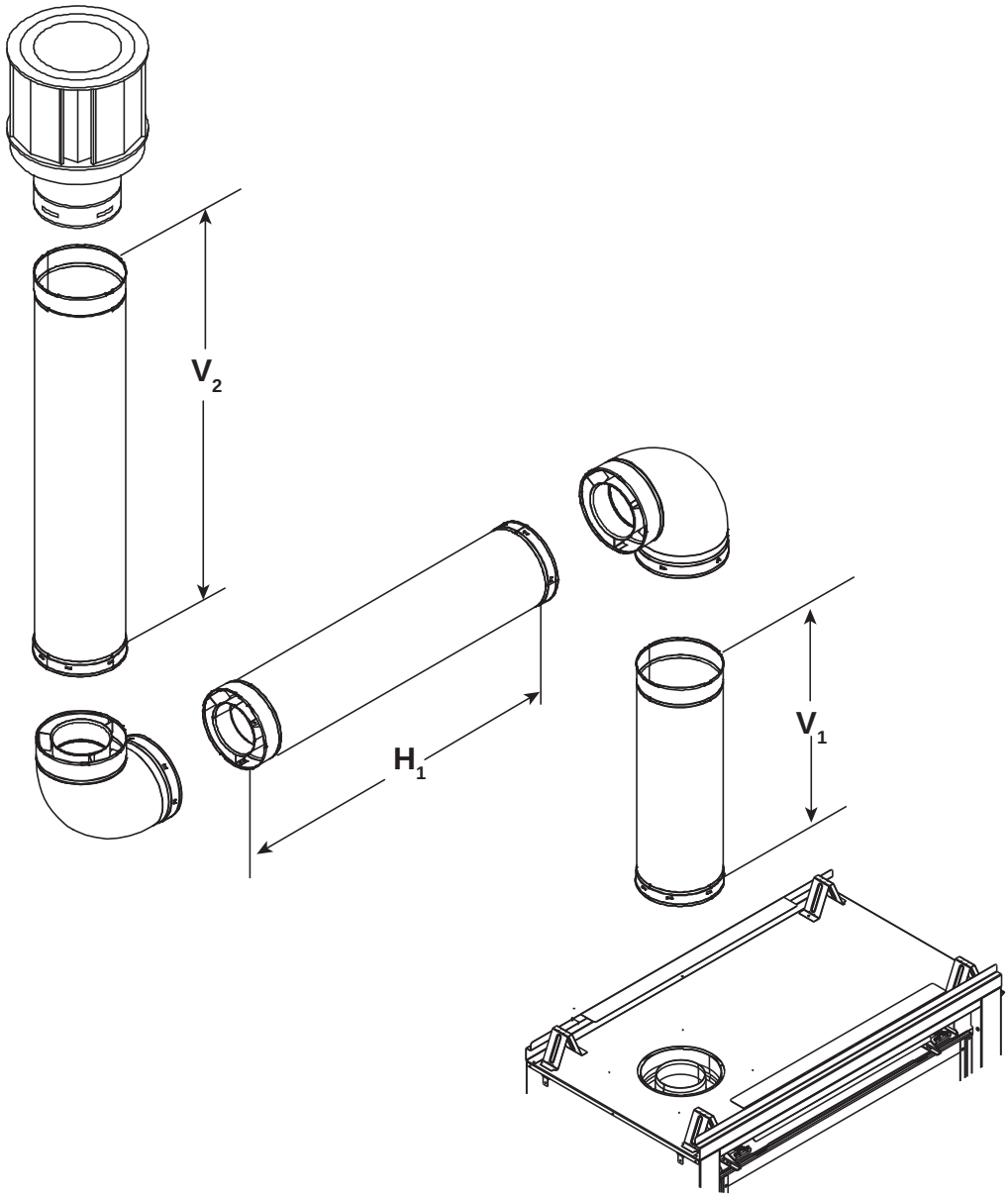

Figure 4.18

Three Elbows

V_1		H_1+ H_2		V_2	V_1 + V_2 Minimum		H_1+ H_2 Maximum	
ELBOW ONLY		1 ft.	305 mm	*	*	*	1 ft.	305 mm
1 ft.	305 mm	2 ft.	610 mm	*	*	*	2 ft.	610 mm
2 ft.	610 mm	4 ft	1.2 m	*	*	*	4 ft	1.2 m
3 ft.	914 mm	9 ft.	2.7 m	*	*	*	9 ft.	2.7 m
4 ft	1.2 m	12 ft.	3.7 m	*	*	*	12 ft.	3.7 m
6 ft.	1.8 m	18 ft.	5.5 m	*	*	*	18 ft.	5.5 m
H_1+ H_2 = 18 ft (5.5 m) Maximum *No specific restrictions on this value EXCEPT V_1+ V_2 + H_1+ H_2 cannot exceed 50 ft (15.2 m)								

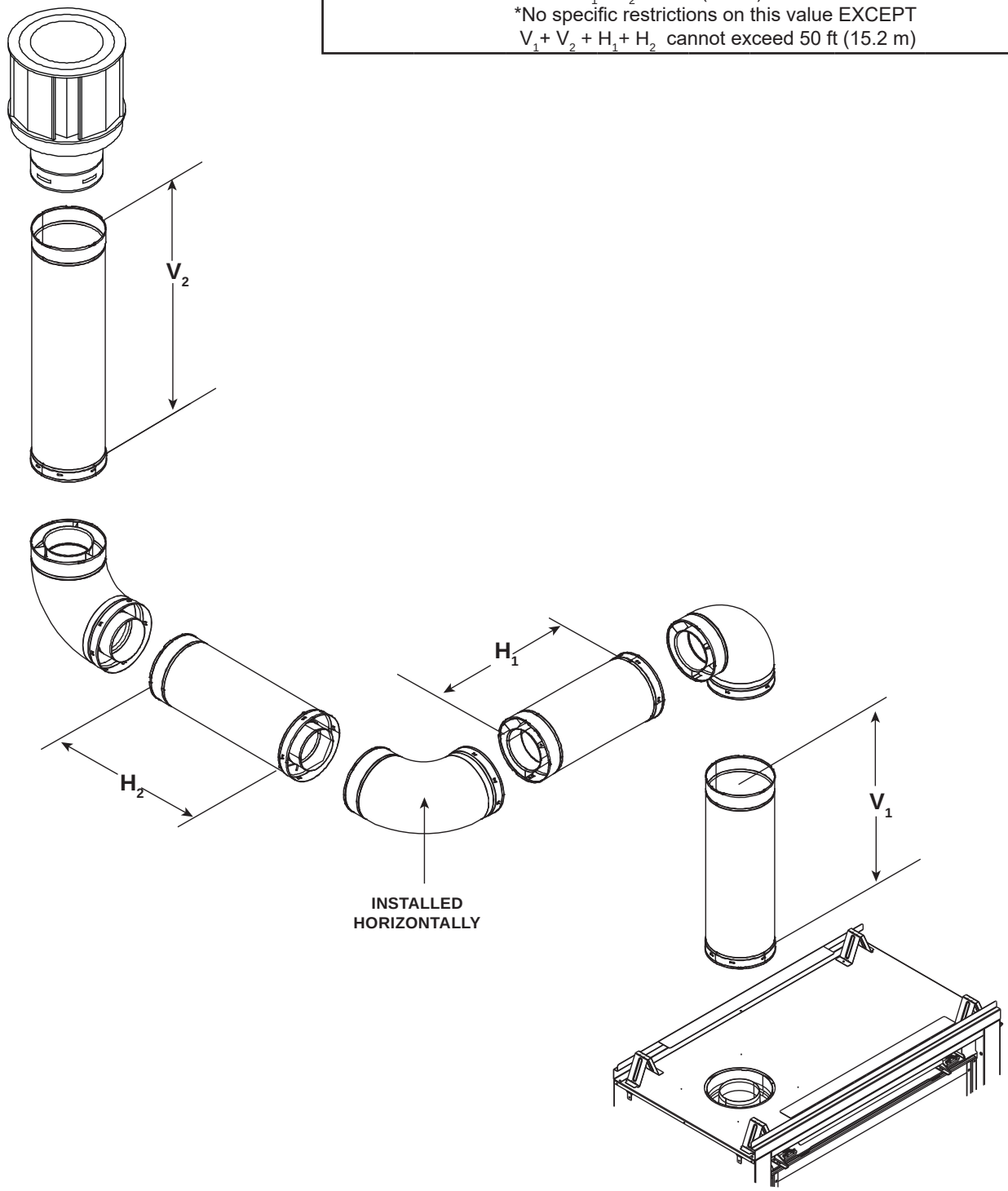

Figure 4.19

Rear Vent - Horizontal Termination

No Elbow

H_1 = 16 in. (406 mm) Maximum

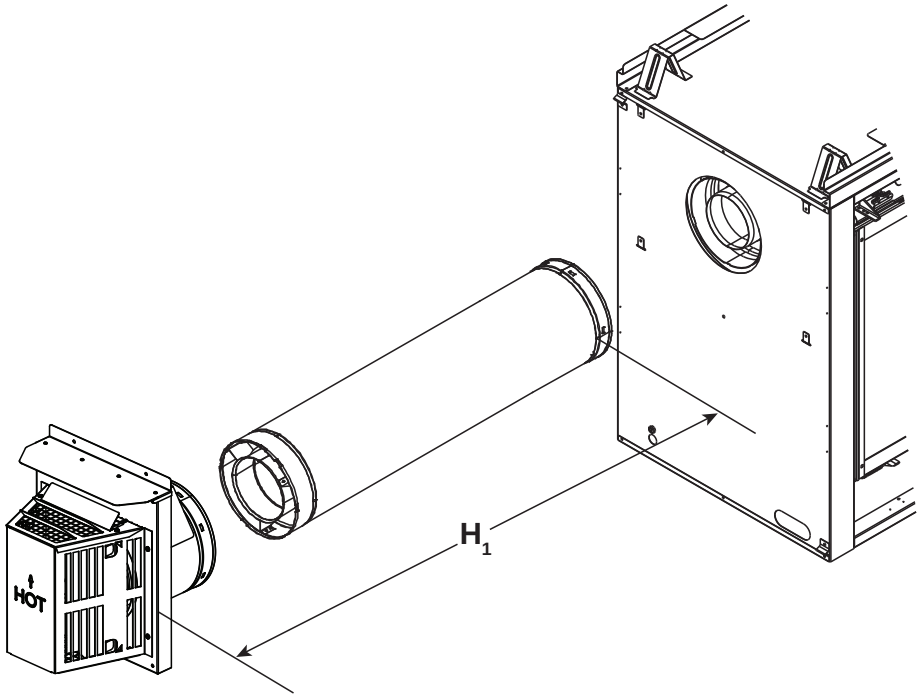

Figure 4.20

One 45º Elbow

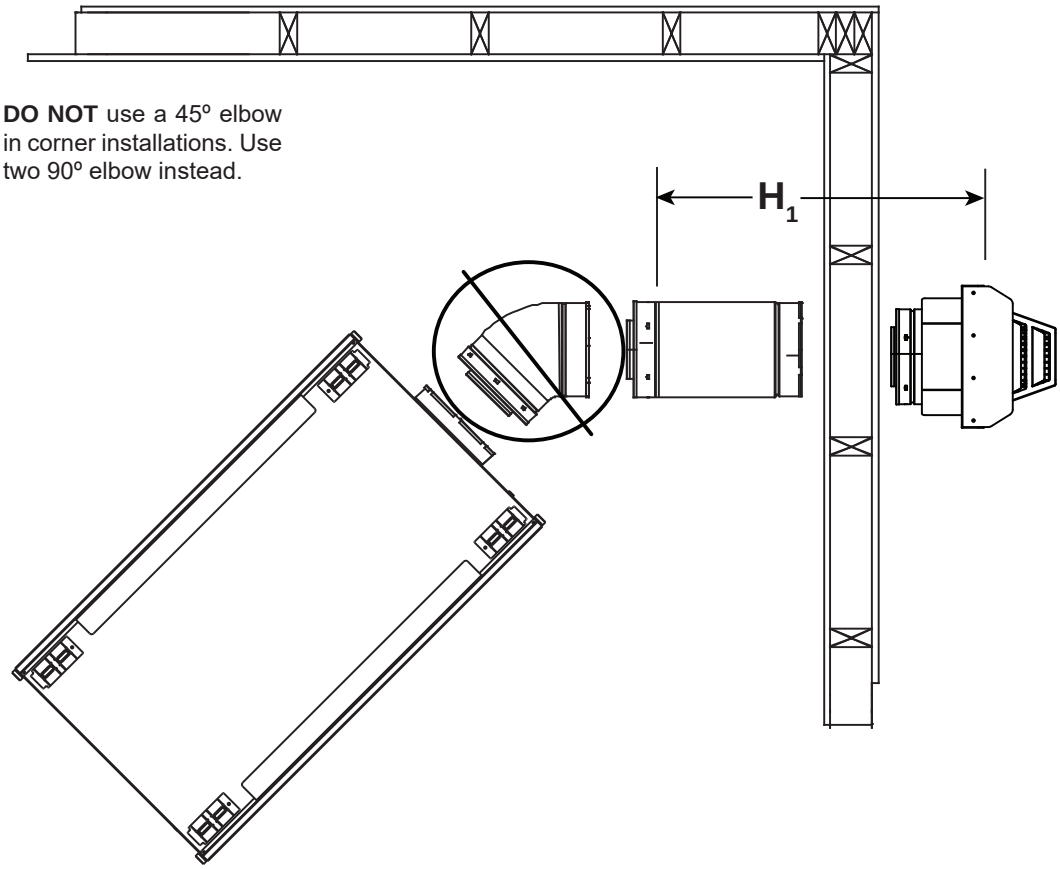

Figure 4.21

Two Elbows

H_1 Maximum		V_1 Minimum		H_2 Maximum		H_1+ H_2 Maximum	
1 ft.	305 mm	6 in.	152 mm	1 ft.	305 mm	1 ft	305 mm
2 ft.	610 mm	1 ft.	305 mm	2 ft.	610 mm	3 ft.	914 mm
3 ft.	914 mm	2 ft.	610 mm	4 ft	1.2 m	6 ft.	1.8 m
3 ft.	914 mm	3 ft.	914 mm	7 ft.	2.1 m	9 ft.	2.7 m
3 ft.	914 mm	4 ft.	1.2 m	10 ft.	3 m	12 ft.	3.7 m
3 ft.	914 mm	5 ft.	1.5 m	12 ft.	3.7 m	15 ft.	4.6 m
3 ft.	914 mm	6 ft.	1.8 m	15 ft.	4.6 m	18 ft.	5.5 m
V_1+ H_1+ H_2= 50 ft (15.2 m) Maximum H_1= 3 ft (914 mm) Maximum *H_1+ H_2= 18 ft (5.5 m) Maximum							

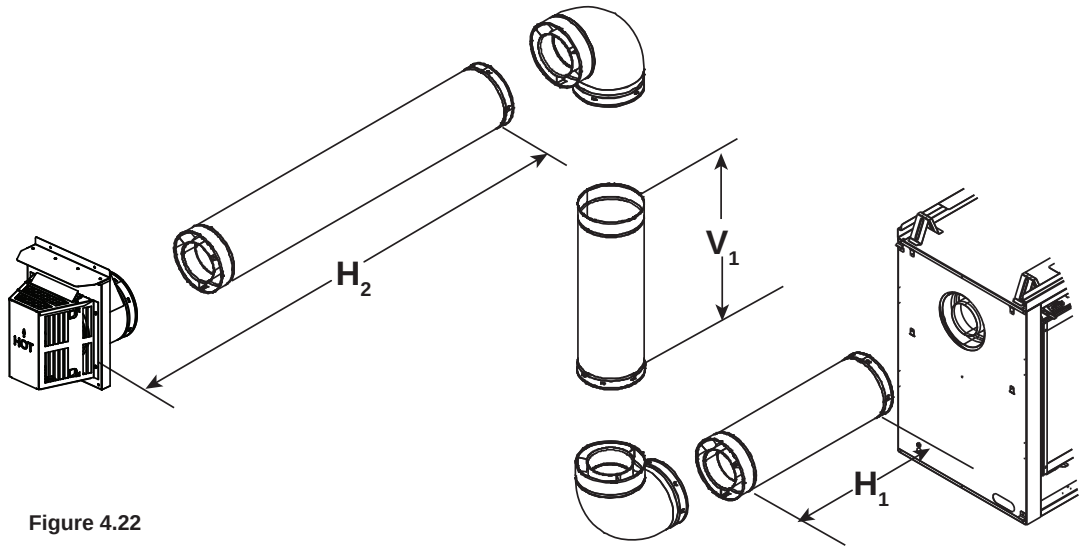

Figure 4.22

Three Elbows

H_1 Maximum		V_1 Minimum		H_1+ H_2+ H_3 Maximum	
6 in.	152 mm	6 in.	152 mm	1 ft.	305 mm
1 ft.	305 mm	1 ft.	305 mm	2 ft.	610mm
3 ft.	914 mm	2 ft.	610 mm	4 ft.	1.2 m
3 ft.	914 mm	3 ft.	914 mm	6 ft.	1.8 m
3 ft.	914 mm	4 ft.	1.2 m	8 ft.	2.4 m
V_1+ H_1+ H_2+ H_3= 40 ft (12.2 m) Maximum H_1= 3 ft (94 mm) Maximum H_1+ H_2+ H_3= 12 ft (3.7 m) Maximum					

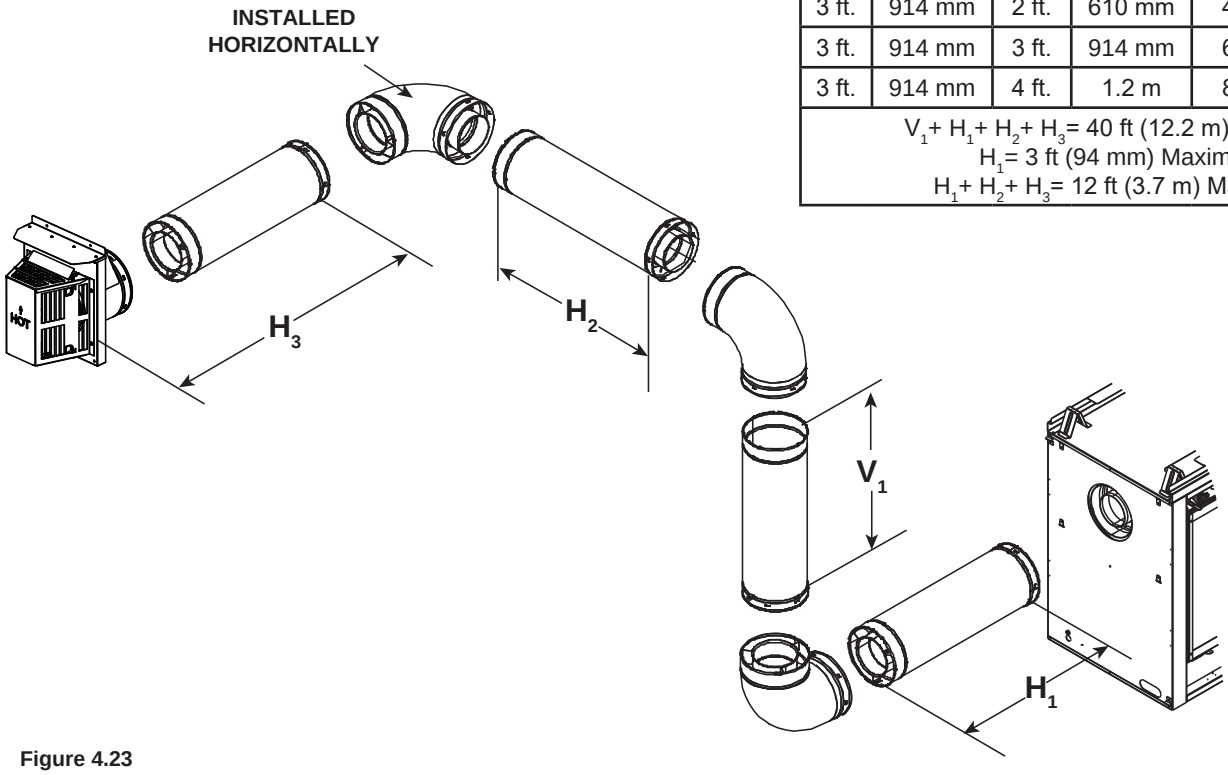

Figure 4.23

Rear Vent - Vertical Termination

One Elbow

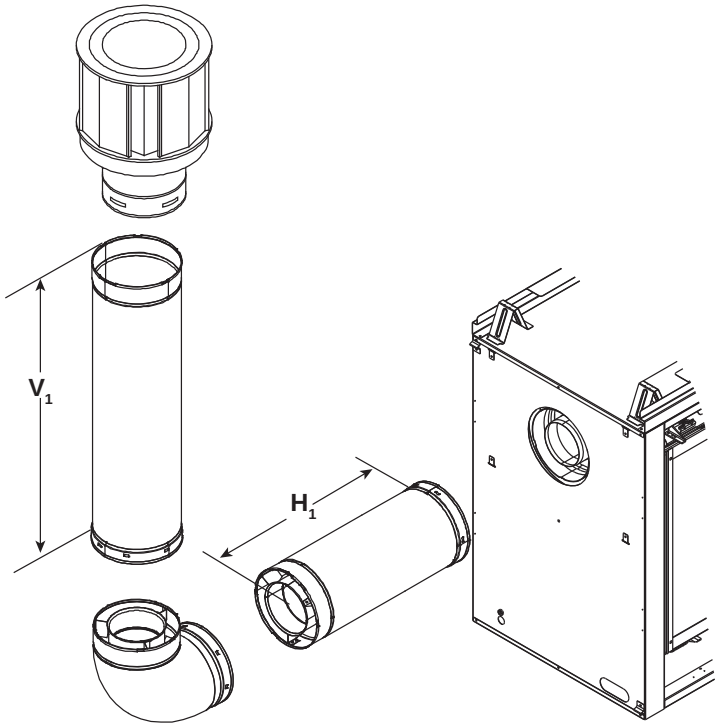

V_1 Minimum		H_1 Maximum	
1 ft.	305 mm	3 ft.	914 mm
2 ft.	610 mm	5 ft.	1.5 m
3 ft.	914 mm	7 ft.	2.1 m
4 ft.	1.2 m	8 ft	2.4 m
5 ft.	1.5 m	8 ft	2.4 m
$V_1 + H_1 =$ 40 ft (12.2 m) Maximum			

Figure 4.24

Two Elbows

V_1 Minimum		$H_1 + H_2$ Maximum	
Back to Back 90° Elbows		3 ft.	914 mm
2 ft	610 mm	6 ft.	1.8 m
4 ft.	1.2 m	9 ft.	2.7 m
5 ft.	1.5 m	10 ft.	3 m
6 ft.	1.8 m	12 ft.	3.7 m
$V_1 + H_1 + H_2 =$ 50 ft (15.2 m) Maximum $H_1 + H_2 =$ 16 ft (4.9 m) Maximum			

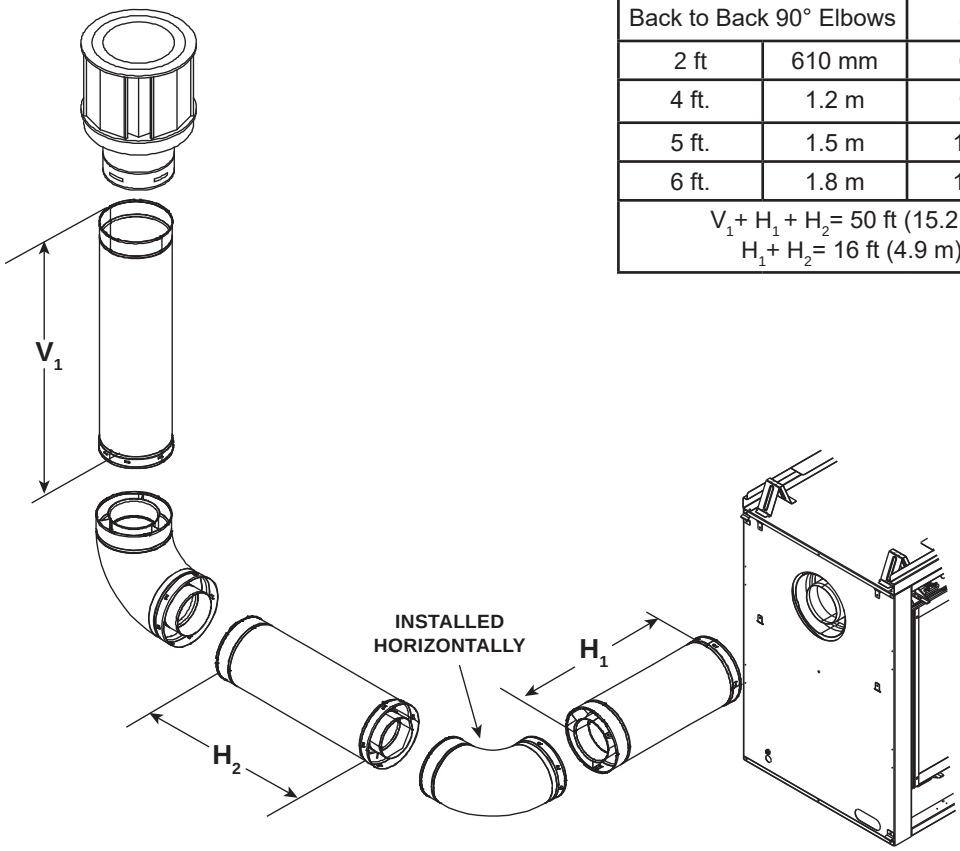

Figure 4.25

Three Elbows

H_1 Maximum		V_1 Minimum		H_2		H_1+ H_2 Maximum	
1 ft.	305 mm	1 ft.	305 mm	1 ft.	305 mm	2 ft.	610 mm
2 ft.	610 mm	2 ft.	610 mm	3 ft.	914 mm	5 ft.	1.5 m
4 ft.	1.2 m	3 ft.	914 mm	4 ft.	1.2 m	8 ft.	4.6 m
5 ft.	1.5 m	4 ft.	1.2 m	6 ft.	1.8 m	11 ft.	3.4 m
6 ft.	1.8 m	5 ft.	1.5 m	8 ft.	2.4 m	14 ft.	4.3 m
8 ft.	2.4 m	6 ft.	1.8 m	9 ft.	2.7 m	17 ft.	5.2 m
H_1 = 8 ft (2.4 m) Max. V_1+ V_2+ H_1+ H_2= 50 ft (15.2 m) Max. H_1+ H_2= 17 ft (5.2 m) Max.							

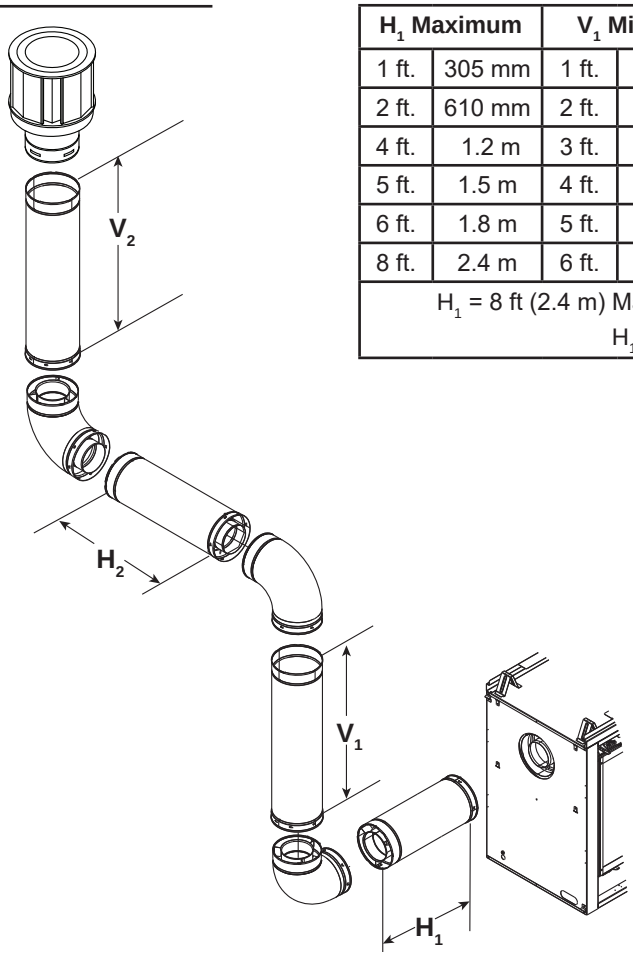

Figure 4.26

Three Elbows

H_1	H_2	H_3	V_1 Minimum		H_1+ H_2+ H_3 Maximum	
*	*	*	8 ft.	2.4 m	4 ft.	1.2 m
*	*	*	9 ft.	2.7 m	5 ft.	1.5 m
*	*	*	10 ft.	3.1 m	6 ft.	1.8 m
*No specific restrictions on this value EXCEPT V_1+ H_1+ H_2+ H_3 cannot exceed 50 ft. (15.2 m) Maximum H_1+ H_2+ H_3 = 6 ft. (1.8 m) Maximum						

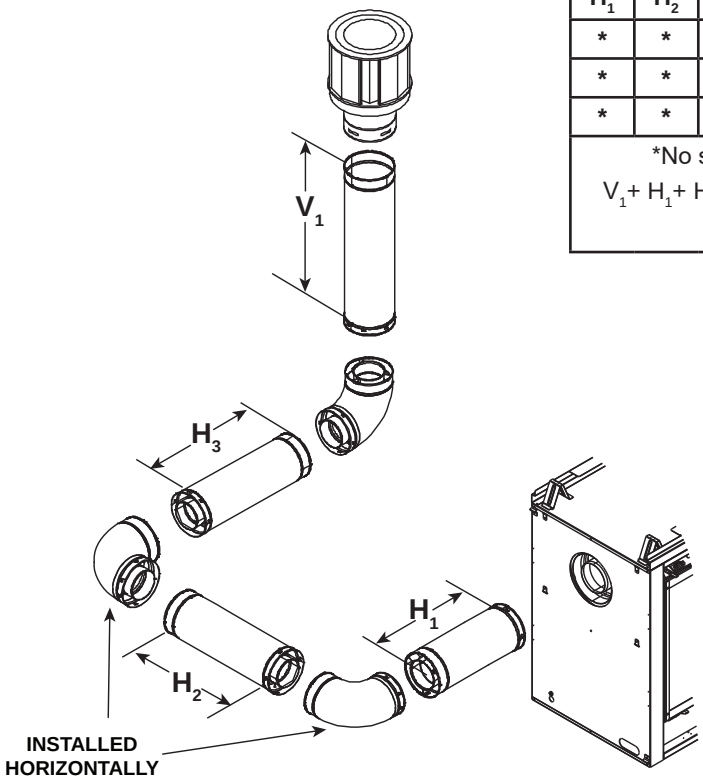

Figure 4.27

5 Vent Clearances and Framing

A. Pipe Clearances to Combustibles

WARNING! Risk of Fire! *Maintain air space clearance to vent.* ***DO NOT*** *pack insulation or other combustibles:*

- *Between ceiling firestops*
- *Between wall shield firestops*
- *Around vent system*

Failure to keep insulation or other material away from vent pipe could cause overheating and fire.

Note: Heat shields MUST overlap by a minimum of 1-1/2 in. (38 mm).
- **DVP heat shield** - designed to be used on a wall 4 in. to 7-1/4 in. (102 mm to 184 mm) thick.
- If wall thickness is less than 4 in. the existing heat shields must be field trimmed. If wall thickness is greater than 7-1/4 in. a DVP-HSM-B will be required.
- **SLP heat shield** - designed to be used on a wall 4-3/8 in. to 7-5/8 in. (111 mm to 194 mm thick).
- If wall thickness is less than 4-3/8 the existing heat shields must be field trimmed. If wall thickness is greater than 7-5/8 in. a DVP-HSM-B will be required.

(DVP-SLP Pipe Shown)

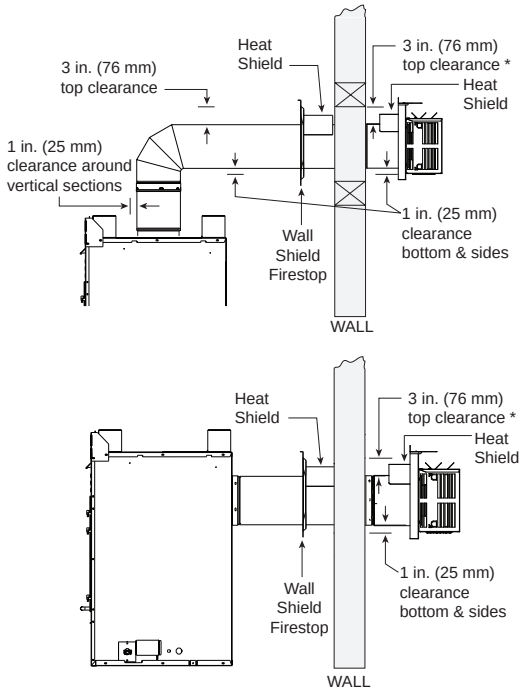

* When using SLP pipe, minimum clearances from the vent pipe to combustible materials at inside wall firestops are: Top: 2-1/2 in. (64 mm)
Bottom: 1/2 in. (13 mm)
Sides: 1 in. (25 mm)

Figure 5.1 Horizontal Venting Clearances To Combustible Materials

B. Wall Penetration Framing

Combustible Wall Penetration

Whenever a combustible wall is penetrated, you must frame a hole for the wall shield firestop(s). The wall shield firestop maintains minimum clearances and prevents cold air infiltration.

- The opening must be framed on all four sides using the same size framing materials as those used in the wall construction.
- SLP pipe - A wall shield firestop must be placed on each side of an interior wall. A minimum 1-1/2 in. (38 mm) overlap of attached heat shields must be maintained.
- DVP pipe - A wall shield firestop is required on one side only on interior walls. If your local inspector requires a wall shield firestop on both sides, then both wall shield firestops must have a heat shield (refer to Section 12.A.) attached to them.
- See Section 7.G. for information for regarding the installation of a horizontal termination cap.

Non-Combustible Wall Penetration

If the hole being penetrated is surrounded by noncombustible materials such as concrete, a hole with diameter one inch greater than the pipe is acceptable.

Whenever a non-combustible wall is penetrated, the wall shield firestop is only required on one side and no heat shield is necessary.

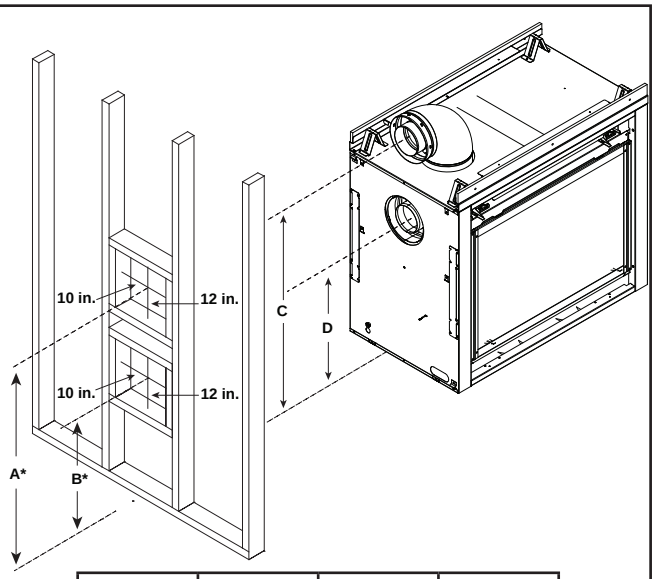

A*	B*	C	D
43-3/4 in.	28 in.	42-3/4 in.	27 in.

* Shows center of vent framing hole for top or rear venting. The center of the hole is one (1) inch (25.4 mm) above the center of the horizontal vent pipe.

Figure 5.2 Wall Penetration

C. Ceiling Firestop/Floor Penetration Framing

A ceiling firestop **MUST** be used between floors and attics.

- **DVP pipe only** - Frame an opening 10 in. by 10 in. (254 mm by 254 mm) whenever the vent penetrates a ceiling/floor. See Figure 5.3.
- **SLP pipe only** - Frame opening 9 in. x 9 in. (229 mm x 229 mm) whenever the vent penetrates a ceiling/floor. See Figure 5.3.
- Frame the area with the same sized lumber as used in ceiling/floor joist.
- The ceiling firestop may be installed above or below the ceiling joists when installed with an attic insulation shield. It must be under joists between floors that are not insulated. Refer to Figure 5.4.
- Secure in place with nails or screws.

WARNING! Risk of Fire! DO NOT pack insulation around the vent. Insulation must be kept back from the pipe to prevent overheating.

D. Install Attic Insulation Shield

***WARNING! Fire Risk. DO NOT** allow loose materials or insulation to touch vent. Hearth & Home Technologies requires the use of an attic shield.*

The International Fuel Gas Code requires an attic shield constructed of 26 gauge minimum steel that extends at least 2 in. (51 mm) above insulation.

- Attic insulation shields must meet specified clearances to combustible materials and be secured in place.
- An attic insulation shield kit is available from Hearth & Home Technologies. Contact your dealer to order. Install attic insulation shield according to instructions included with kit.

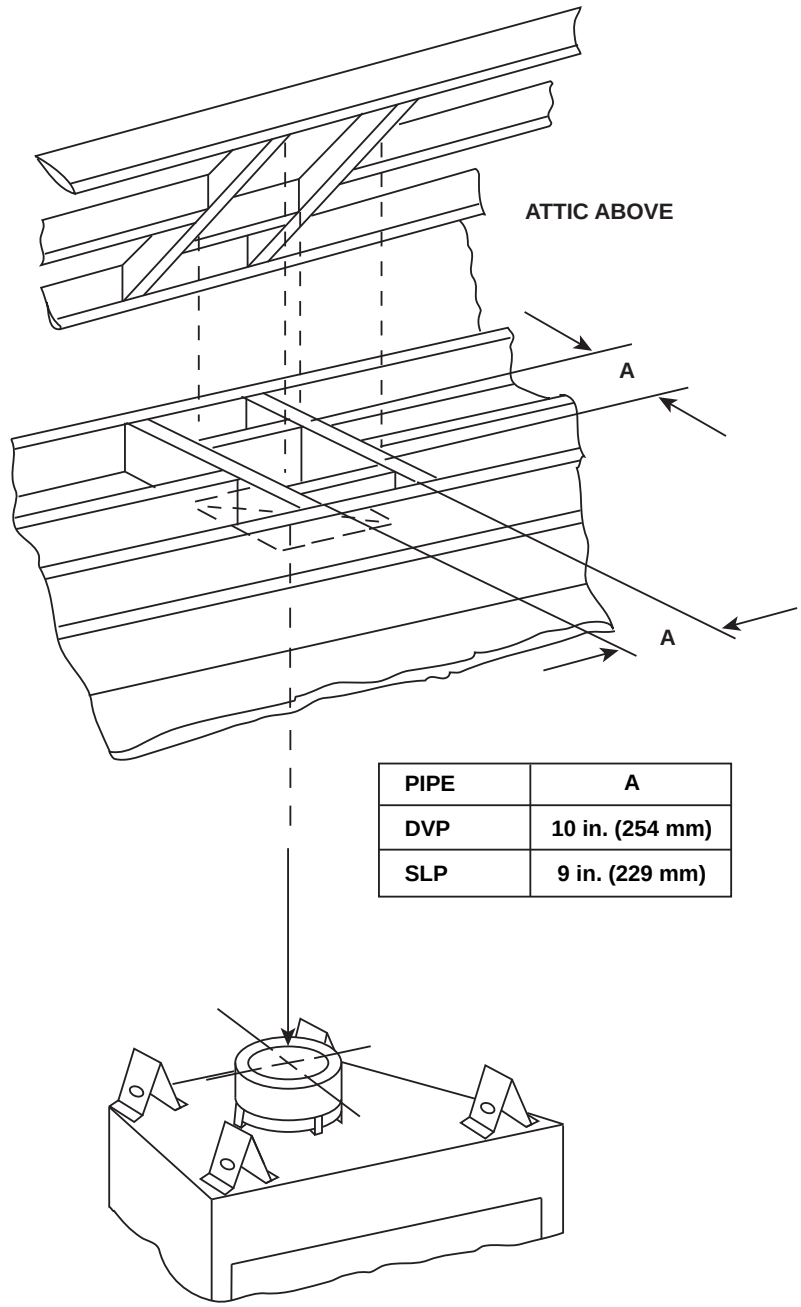

PIPE	A
DVP	10 in. (254 mm)
SLP	9 in. (229 mm)

Figure 5.3 Installing Ceiling Firestop

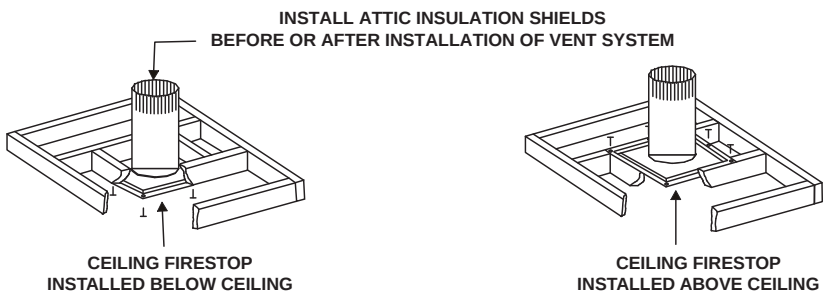

Figure 5.4 Installing the Attic Shield

6 Appliance Preparation

A. Vent Collar Preparation

CAUTION! Risk of Cuts, Abrasions or Flying Debris. *Wear protective gloves and safety glasses during installation. Sheet metal edges are sharp.*

NOTICE: *Once appliance is set up for top or rear venting, it CANNOT be changed at a later time.*

Top Vent

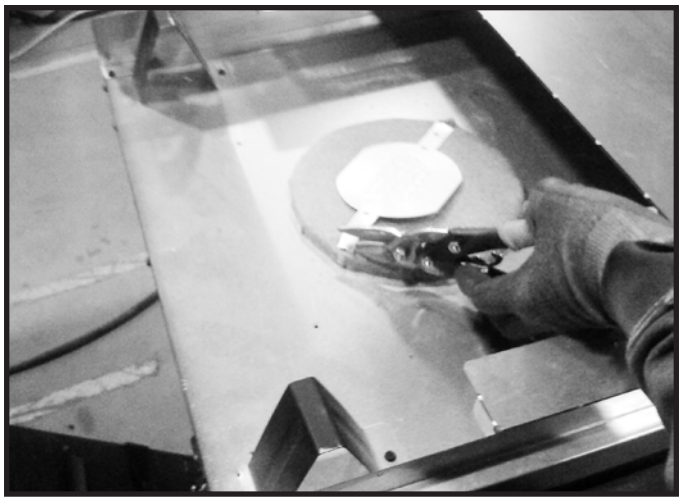

Figure 6.1 Cut the metal retaining band and fold the sides out.

Figure 6.2 Fold the center parts of the retaining band up and use to remove the vent cap.

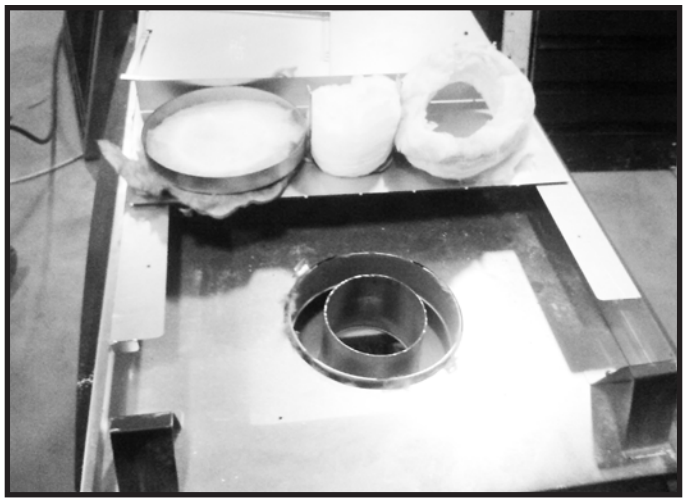

Figure 6.3 Remove and discard the seal cap, insulation donut, insulation plug, and the insulation basket. Attach the first vent section (it will snap into place). Slide the vent gasket onto the vent section and then, up against the appliance. Secure the vent gasket to the appliance with two self-tapping screws found in the manual bag. Note: The vent gasket can found in the manual bag.

Proceed to Section 6.B.

Rear Vent

NOTICE: *Once appliance is set up for top or rear venting, it CANNOT be changed at a later time.*

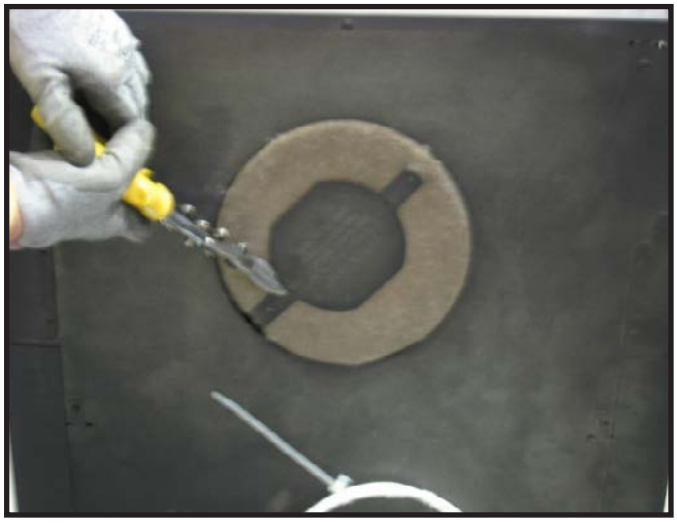

Figure 6.4 Cut the metal retaining band.

Figure 6.5 Remove the seal cap.

NOTICE: *Once the vent cap has been removed it CANNOT be reattached.*

Figure 6.6 Discard the seal cap, insulation plug and the insulation basket.

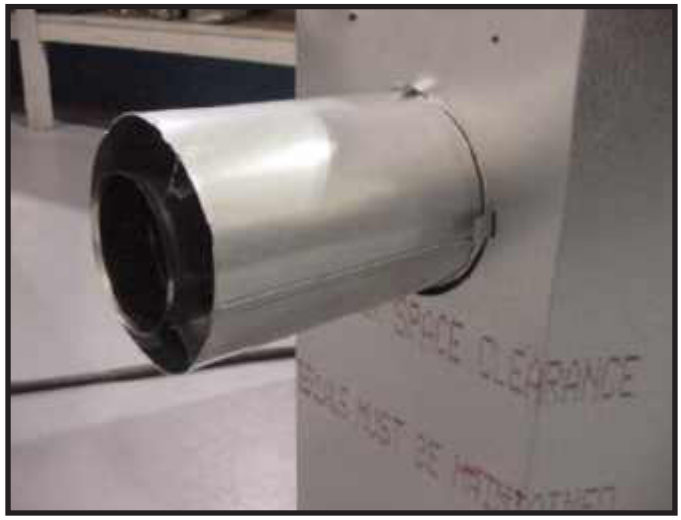

Figure 6.7 Attach the first vent section (it will snap into place). Slide the vent gasket onto the vent section and then, up against the appliance. Secure the vent gasket to the appliance with two self-tapping screws found in the manual bag. Note: The vent gasket can found in the manual bag.

B. Securing and Leveling the Appliance

WARNING! Risk of Fire! *Prevent contact with:*

- *Sagging or loose insulation*
- *Insulation backing or plastic*
- *Framing and other combustible materials*

Block openings into the chase to prevent entry of blown-in insulation. Make sure insulation and other materials are secured.

DO NOT *notch the framing around the appliance standoffs.*

Failure to maintain air space clearance may cause overheating and fire.

NOTICE: *Failure to ensure that the fireplace opening is square could result in the decorative front not fitting properly.*

Figure 6.8, Figure 6.9, Figure 6.10 and Figure 6.11 show how to properly position, level, and secure the appliance. Nailing tabs are provided to secure the appliance to the framing members.

- Bend out nailing tabs on each side.
- Place the appliance into position.
- Keep nailing tabs flush with the framing.
- Level the appliance from side to side and front to back.
- Shim the appliance as necessary. It is acceptable to use wood shims underneath the appliance.
- Secure the appliance to the framing by using nails or screws through the nailing tabs.
- Optional: Secure the appliance to the floor by inserting two screws through the pilot holes at the bottom of the appliance.

NOTICE: *Failure to ensure that the fireplace opening is square could result in the decorative front not fitting properly.*

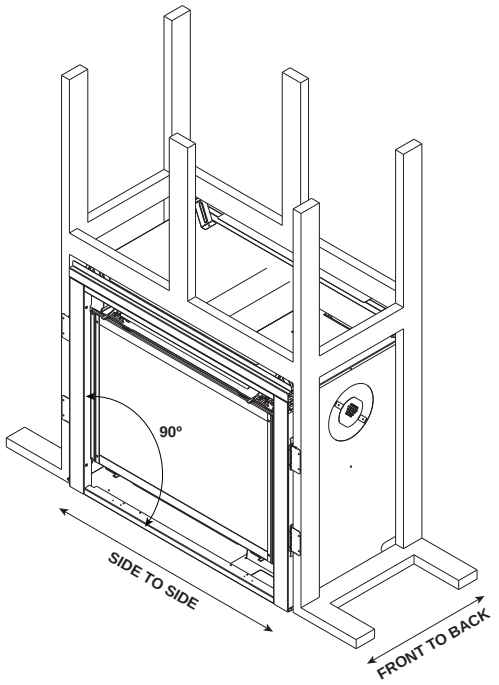

Figure 6.8 Proper Positioning and Leveling of an Appliance

NOTICE: *Failure to ensure that the fireplace opening is square may result in the decorative front not fitting properly.*

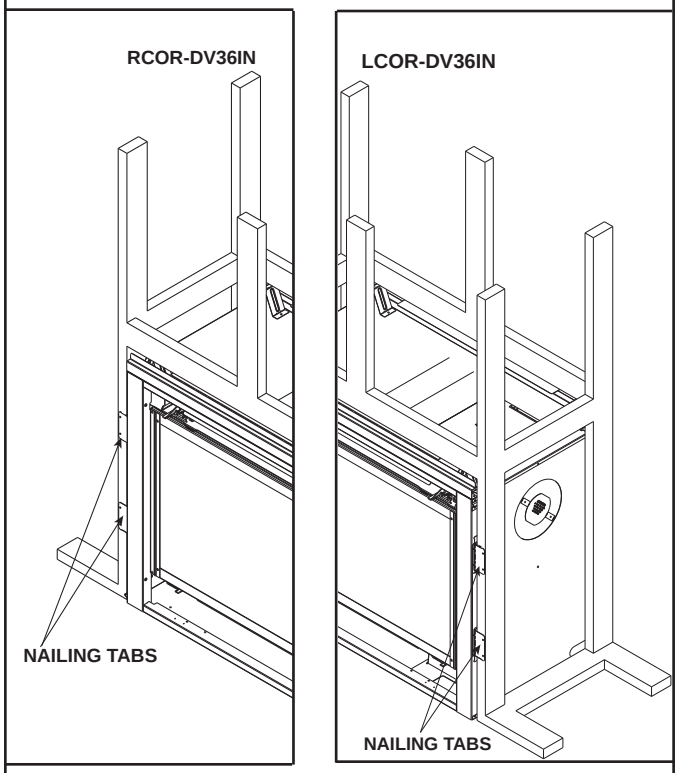

Figure 6.9 Securing an Appliance

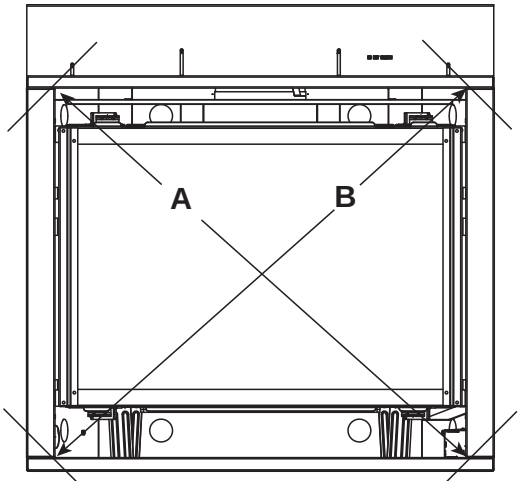

Note: Diagonal dimensions (A) and (B) must be within 1/4 inch of each other.

Figure 6.10 Positioning the Appliance Squarely

WARNING! Risk of Fire! *DO NOT remove standoff. Appliance could overheat!*

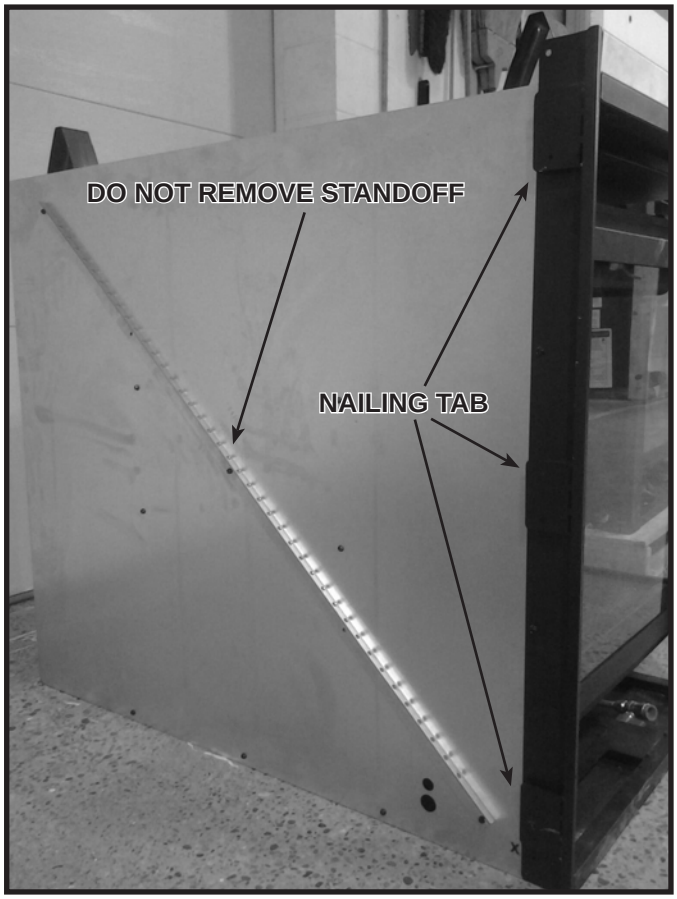

Figure 6.11 Nailing Tab Location

C. Non-Combustible Material Installation

The factory-installed non-combustible board spans the distance from the top of the fireplace to the framing header. This board must be used. See Figure 6.12.

WARNING! Risk of Fire! *DO NOT remove factory-installed non-combustible material.*

Figure 6.12 Non-combustible Board

A. Assemble Vent Sections (DVP Pipe Only)

Attach Vent to the Firebox Assembly

Note: The end of the pipe sections with the lanced tabs will face toward the appliance.

Attach the first pipe section to the starting collar:

- Lanced pipe end of the starting collar.
- Inner pipe over inner collar.
- Push the pipe section until all lanced tabs snap in place.
- Lightly tug on pipe to confirm it has locked.

Required Commercial, Multi-family (Multi-level exceeding two stories), or High-Rise Applications

All outer pipe joints must be sealed with 100% silicone (300 ºF minimum continuous exposure rating), including the slip section that connects directly to the horizontal termination cap.

- Apply a bead of silicone sealant (300 ºF minimum continuous exposure rating) inside the female outer pipe joint prior to joining sections. See Figure 7.1. **OR**

  Apply a bead of silicone sealant (300 ºF minimum continuous exposure rating) to the outside of connecting joint after joining sections **OR**

  Apply aluminum foil tape (300 ºF minimum continuous exposure rating) to the outside of connecting joint after joining sections. On horizontal pipe runs, it is recommended that the tape seam is positioned on the bottom side of the vent pipe.
- Only outer pipes need to be sealed. All unit collar, pipe, slip section, elbow and cap outer flues shall be sealed in this manner, unless otherwise stated.

***WARNING! Risk of Fire or Explosion! DO NOT** break silicone seals on slip sections. Use care when removing termination cap from slip pipe. If slip section seals are broken during removal of the termination cap, vent could leak.*

Assemble Pipe Sections

Per Figure 7.2:

- Start the inner pipe on the lanced end of section A into the flared end of section B.
- Start the outer pipe of section A over the outer pipe of section B.
- Once both vents sections are started, push firmly until all lanced tabs lock into place.
- Lightly tug on the pipe to confirm the tabs have locked.

It is acceptable to use screws no longer than 1/2 in. (13 mm) to hold outer pipe sections together. If predrilling holes, **DO NOT** penetrate inner pipe.

For 90º and 45º elbows that are changing the vent direction from horizontal to vertical, one screw minimum should be put in the outer flue at the horizontal elbow joint to prevent the elbow from rotating. Use screws no longer than 1/2 in. (13 mm). If predrilling screw holes, **DO NOT** penetrate inner pipe.

Figure 7.1 High Temperature Silicone Sealant

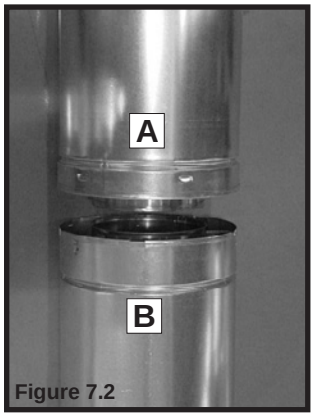

Figure 7.2

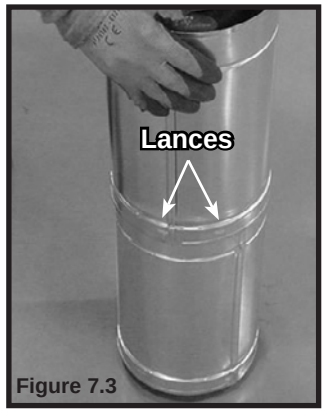

Figure 7.3

Note: Make sure that the seams are not aligned to prevent unintentional disconnection.

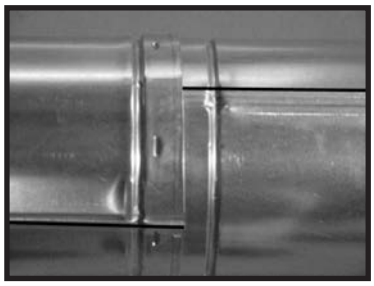

CORRECT

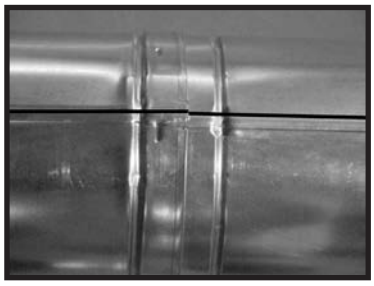

Figure 7.4 Seams **INCORRECT**

B. Assemble Vent Sections

(SLP Only)

To attach the first vent component to the starting collars of the appliance:

- Attach a DVP-SLP24 or DVP-2SL adapter to the starting collar of the appliance.
- Lock the vent components into place by sliding the pipe section onto the collar.
- Align the seam of the pipe and seam of collar to allow engagement. Rotate the vent component to lock into place. Use this procedure for all vent components. See Figure 7.5.
- Slide the gasket over the first vent section and place it flush to the appliance. This will prevent cold air infiltration. Caulk with a minimum of 300 ºF continuous exposure rating may be used to hold the part in place.
- Continue adding vent components, locking each succeeding component into place.
- Ensure that each succeeding vent component is securely fitted and locked into the preceding component.

It is acceptable to use screws no longer than 1/2 in. (13 mm) to hold outer pipe sections together. If predrilling holes, **DO NOT** penetrate inner pipe.

Required Commercial, Multi-family (Multi-level exceeding two stories), or High-Rise Applications

All outer pipe joints must be sealed with high temperature silicone (300 ºF minimum continuous exposure rating), including the slip section that connects directly to the horizontal termination cap.

- Apply a bead of silicone sealant (300 ºF minimum continuous exposure rating) inside the female outer pipe joint prior to joining sections. See Figure 7.1. **OR**

  Apply a bead of silicone sealant (300 ºF minimum continuous exposure rating) to the outside of connecting joint after joining sections **OR**

  Apply aluminum foil tape (300 ºF minimum continuous exposure rating) to the outside of connecting joint after joining sections. On horizontal pipe runs, it is recommended that the tape seam is positioned on the bottom side of the vent pipe.
- Only outer pipes need to be sealed. All unit collar, pipe, slip section, elbow and cap outer flues shall be sealed in this manner, unless otherwise stated.

***WARNING! Risk of Fire or Explosion! DO NOT** break silicone seals on slip sections. Use care when removing termination cap from slip pipe. If slip section seals are broken during removal of the termination cap, vent could leak.*

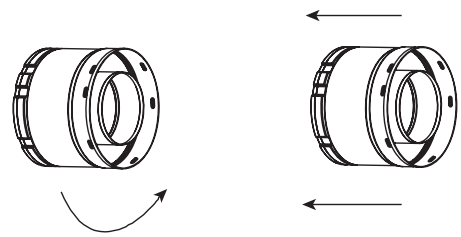

Note: Align seams to engage pipe, then rotate counterclockwise to lock

Figure 7.5 Adding Venting Components

C. Assemble Slip Sections (SLP & DVP)

- Slide the inner flue of the slip section into the inner flue of the pipe section and the outer flue of the slip section over the outer flue of the pipe section. See Figure 7.6.
- Slide together to the desired length.

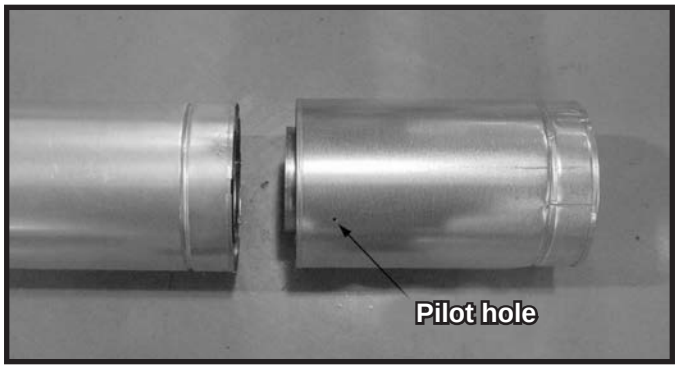

Figure 7.6 Slip Section Pilot Holes

- Maintain a 1-1/2 in. (38 mm) overlap between the slip section and the pipe section.
- Secure the pipe and slip section with two screws no longer than 1/2 in. (13 mm), using the pilot holes in the slip section. See Figure 7.7.

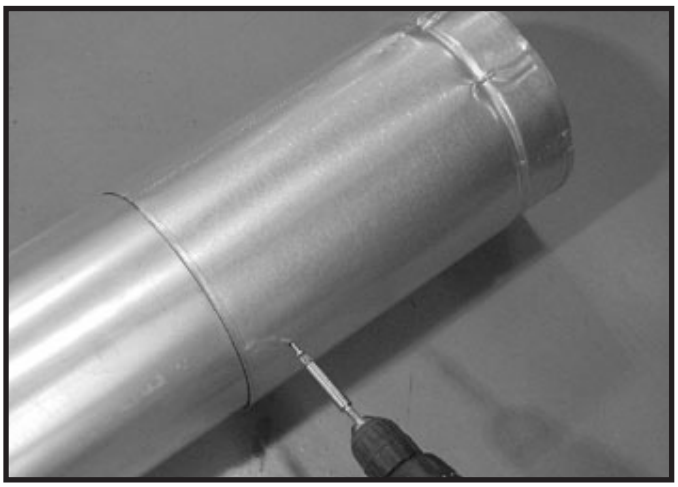

Figure 7.7 Screws into Slip Section

- Continue adding pipe as necessary following instructions in "Assembling Pipe Sections."

NOTICE: *If slip section is too long, the inner and outer flues of the slip section can be cut to the desired length.*

NOTICE: *When installing a vent system with an HRC termination cap, all pipe system joints shall be sealed using a high temperature silicone sealant (300 ºF minimum continuous exposure rating).*

- *Apply a bead of silicone sealant (300 ºF minimum continuous exposure rating) inside the female outer pipe joint prior to joining sections.*
- *Only outer pipes are sealed, sealing the inner flue is not required.*
- *All unit collar, pipe, slip section, elbow and cap outer flues shall be sealed.*

D. Secure the Vent Sections

- Vertical runs originating off the top of the appliance, with no offsets, must be supported every 8 ft. (2.44 m) after the maximum allowed 25 ft. (7.62 m) of unsupported rise.
- Vertical runs originating off the rear of the appliance, or after any elbow, must be supported every 8 ft. (2.44 m).
- Horizontal runs must be supported every 5 feet (1.52 m).
- Vent supports or plumbers strap (spaced 120º apart) may be used to support vent sections. See Figures 7.8 and 7.9.
- Wall shield firestops may be used to provide horizontal support to vent sections.
- SLP ceiling firestops have tabs that may be used to provide vertical support.

WARNING! Risk of Fire, Explosion or Asphyxiation! *Improper support could allow vent to sag and separate. Use vent run supports and connect vent sections per installation instructions.* ***DO NOT*** *allow vent to sag below connection point to appliance.*

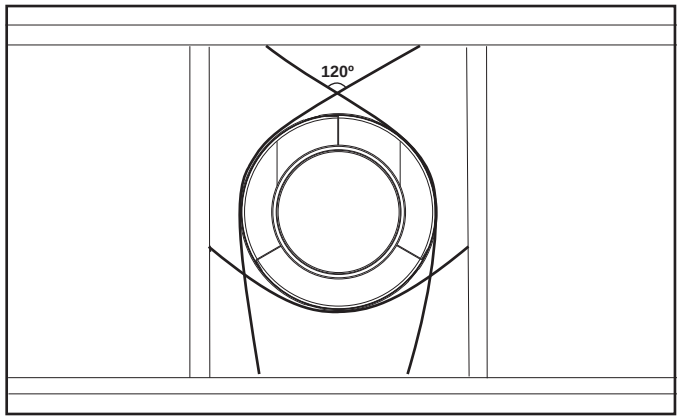

Figure 7.8 Securing Vertical Pipe Sections

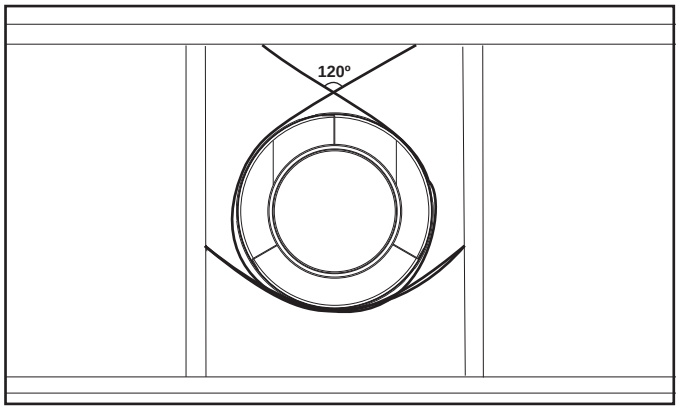

Figure 7.9 Securing Horizontal Pipe Sections

E. Disassemble Vent Sections

- Rotate either section (see Figure 7.10) so the seams on both pipe sections are aligned as shown in Figure 7.11.
- Pull carefully to separate the pieces of pipe.

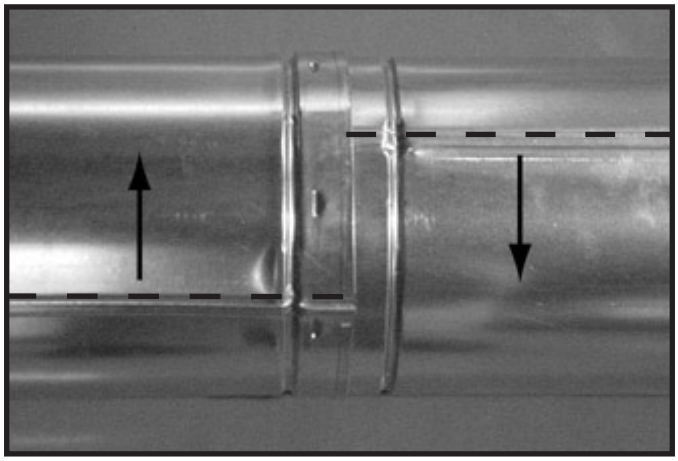

Figure 7.10 Rotate Seams for Disassembly

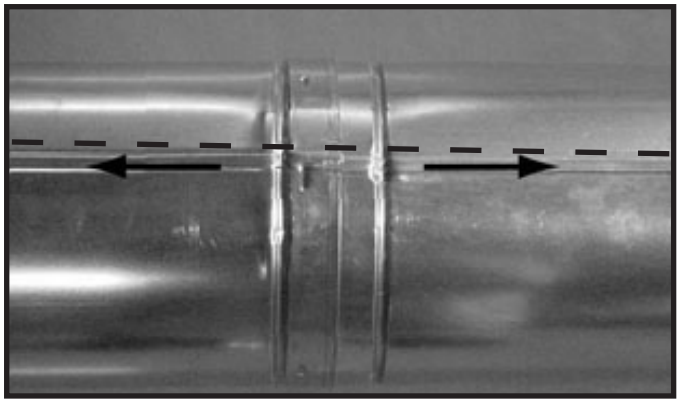

Figure 7.11 Align and Disassemble Vent Sections

F. Vertical Termination Requirements

Install Metal Roof Flashing

- See minimum vent heights for various pitched roofs (Figure 7.12) to determine the length of pipe to extend through the roof.
- Slide the roof flashing over the pipe sections extending through the roof as shown in Figure 7.13.

Note: When installing a silicone or EPDM pipe flashing boot on a metal roof, it is recommended to put a bead of 100% silicone sealant where the boot contacts the vent pipe to prevent the entry of water. Follow the manufacturer's recommendations when installing the boot.

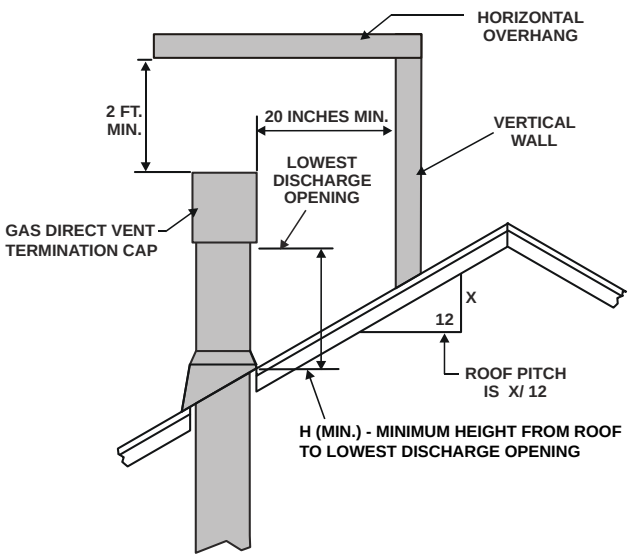

Roof Pitch	H (Min.) Ft.
Flat to 6/12	1.0*
Over 6/12 to 7/12	1.25*
Over 7/12 to 8/12	1.5*
Over 8/12 to 9/12	2.0*
Over 9/12 to 10/12	2.5*
Over 10/12 to 11/12	3.25
Over 11/12 to 12/12	4.0
Over 12/12 to 14/12	5.0
Over 14/12 to 16/12	6.0
Over 16/12 to 18/12	7.0
Over 18/12 to 20/12	7.5
Over 20/12 to 21/12	8.0

* H minimum may vary depending on regional snowfall. Refer to local codes.

Figure 7.12 Minimum Height From Roof to Lowest Discharge Opening

NOTICE: *Failure to properly caulk the roof flashing and pipe seams could permit entry of water.*

- Caulk the gap between the roof flashing and the outside diameter of the pipe.
- Caulk the perimeter of the flashing where it contacts the roof surface. See Figure 7.13.
- Caulk the overlap seam of any exposed pipe sections that are located above the roof line.

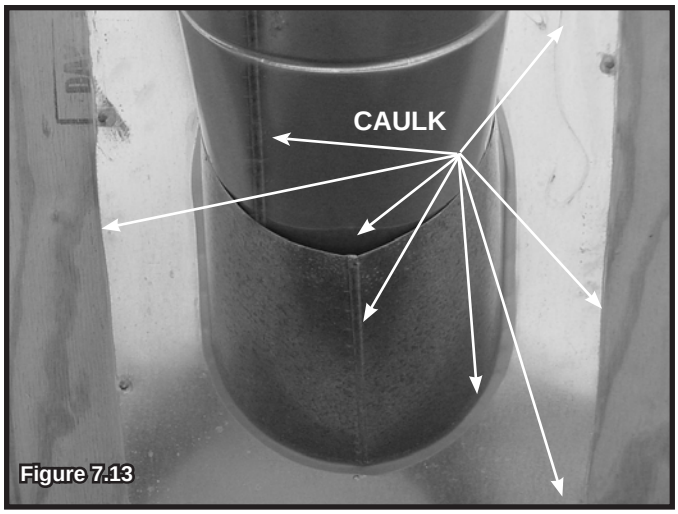

Figure 7.13

Assemble and Install Storm Collar

CAUTION! Risk of Cuts, Abrasions or Flying Debris. *Wear protective gloves and safety glasses during installation. Sheet metal edges are sharp.*

- Slide the storm collar onto the exposed pipe section and align brackets.
- Insert a bolt (provided) through the brackets and install nut. Do not completely tighten.

Figure 7.14 Insert Bolt into Brackets

- Slide the assembled storm collar down the pipe section until it rests on the roof flashing (see Figure 7.14).
- Tighten nut and make sure the collar is tight against the pipe section.
- Caulk around the top of the storm collar. See Figure 7.15.

Install Vertical Termination Cap

- Attach the vertical termination cap by sliding the inner collar of the cap into the inner flue of the pipe section while placing the outer collar of the cap over the outer flue of the pipe section.
- Secure the cap by driving three self-tapping screws (supplied) through the pilot holes in the outer collar of the cap into the outer flue of the pipe (see Figure 7.15).

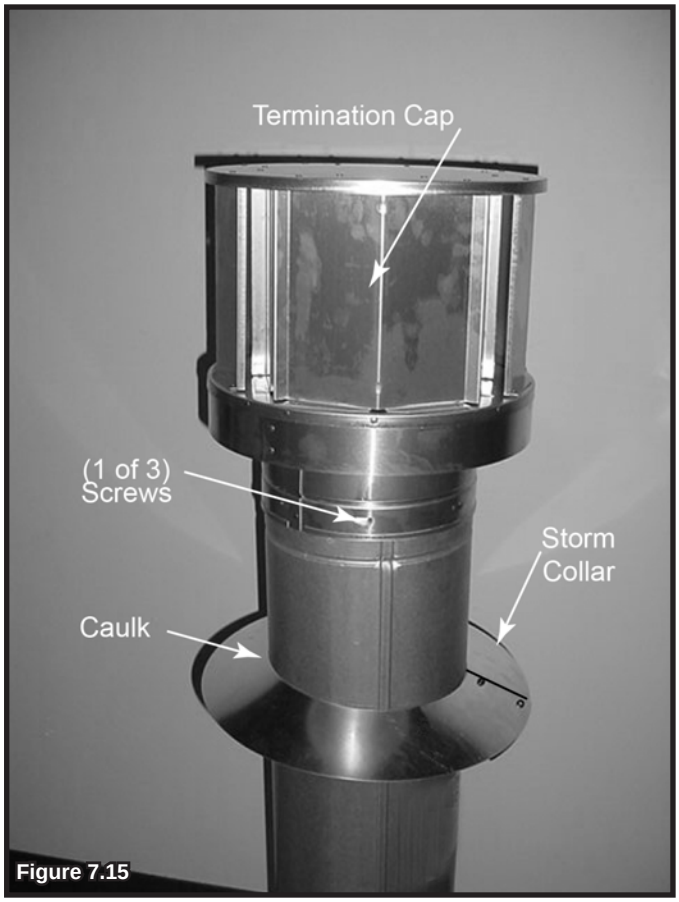

Figure 7.15

G. Horizontal Termination Requirements

Heat Shield Requirements for Horizontal Termination

WARNING! Risk of Fire! *To prevent overheating and fire, heat shields must extend through the entire wall thickness.*

- ***DO NOT*** *remove the heat shields attached to the wall shield firestop and the horizontal termination cap (shown in Figure 7.16).*
- *Heat shields must overlap 1-1/2 in. (38 mm) minimum.*

There are two sections of the heat shield. One section is factory-attached to the wall shield firestop. The other section is factory-attached to the cap. See Figure 7.16.

If the wall thickness does not allow the required 1-1/2 in. (38 mm) heat shield overlap when installed, an extended heat shield must be used.

- If the wall thickness is less than 4 in./102 mm (DVP) or 4-3/8 in./ 111 mm (SLP), the heat shields on the cap and wall shield firestop must be trimmed. A minimum 1-1/2 in. (38 mm) overlap MUST be maintained.
- Use an extended heat shield if the finished wall thickness is greater than 7-1/4 in. (184 mm).
- The extended heat shield may need to be cut to length maintaining sufficient length for a 1-1/2 in. (38 mm) overlap between heat shields.
- Attach the extended heat shield to either of the existing heat shields using the screws supplied with the extended heat shield. Refer to vent components diagrams in the back of this manual.
- Rest the small leg on the extended heat shield on top of the pipe section to properly space it from the pipe section.

Important Notice: Heat shields may not be field constructed.

Install Horizontal Termination Cap (DVP and SLP Pipe)

WARNING! Risk of Fire! *The telescoping flue section of the termination cap MUST be used when connecting vent.*

- *1-1/2 (38 mm) minimum overlap of flue telescoping section is required.*

Failure to maintain overlap could cause overheating and fire.

- Vent termination must not be recessed in the wall. Siding may be brought to the edge of the cap base.
- Flash and seal as appropriate for siding material at outside edges of cap.
- When installing a horizontal termination cap, follow the cap location guidelines as prescribed by current **ANSI Z223.1** and **CAN/CGA-B149** installation codes and refer to Section 4 of this manual.

CAUTION! Risk of Burns! *Local codes may require installation of a cap shield to prevent anything or anyone from touching the hot cap.*

NOTICE: *For certain exposures which require superior resistance to wind-driven rain penetration, a flashing kit and HRC caps are available. When penetrating a brick wall, a brick extension kit is available for framing the brick.*

Note: When using termination caps with factory-supplied heat shield attached, no additional wall shield firestop is required on the exterior side of a combustible wall.

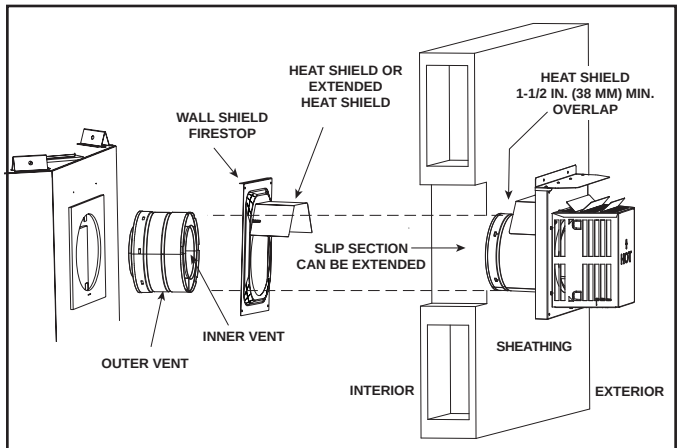

Figure 7.16 Venting Through the Wall

Cap Specification Chart
(depth without using additional pipe sections)

36 inch Multisided Series	**DVP-TRAPK1 Top Vent Depth**	**DVP-TRAP1 Rear Vent Depth**	**DVP-TRAPK2 Top Vent Depth**	**DVP-TRAP2 Rear Vent Depth**
	2-7/8 in to 4-3/4 in	3-1/8 in. to 5 in.	5-1/4 in. to 9-1/4 in.	5-1/2 in. to 9-1/2 in.
	DVP-HPC1 Top Vent Depth	**DVP-HPC1 Rear Vent Depth**	**DVP-HPC2 Top Vent Depth**	**DVP-HPC2 Rear Vent Depth**
	2-7/8 in. to 5 in.	3-1/8 in. 5-1/4 in.	5 in. to 9-1/8 in.	5-1/4 in. to 9-1/2 in.

DVP-TRAP1 can adjust 1-1/2 in. (3-1/8 to 4-5/8 in.)
DVP-TRAP2 can adjust 4 in. (5-3/8 to 9-3/8)
DVP-HPC1 can adjust 2-1/8 in. (4-1/4 to 6-3/8)
DVP-HPC2 can adjust 4-1/8 in. (6-3/8 to 10-1/2)

8 Electrical Information

A. General Information

***WARNING! Risk of Shock or Explosion! DO NOT** wire 110-120 VAC to the valve or to the appliance wall switch. Incorrect wiring will damage controls.*

***NOTICE:** This appliance must be electrically wired and grounded in accordance with local codes or, in the absence of local codes, with* **National Electric Code ANSI/NFPA 70-latest edition** *or the* **Canadian Electric Code CSA C22.1.**

- Wire the appliance junction box to unswitched 110-120 VAC. This is required for proper operation of the appliance.
- A 110-120 VAC circuit for this product must be protected with ground-fault circuit-interrupter protection, in compliance with the applicable electrical codes, when it is installed in locations such as in bathrooms or near sinks.
- Low voltage and 110-120 VAC voltage cannot be shared within the same wall box.

Junction Box Installation

The junction box must be wired from the **INSIDE** of the appliance:

- Determine which side of the appliance the junction box is located on.
- Pull the electrical wires from outside the appliance through the knockout making sure to use a Romex connector to fasten the electrical wires to the unit.
- Pull enough wire into the valve compartment to easily reach the junction box location.
- Remove the screw attaching the junction box to the junction box bracket and set it aside.
- Route the wire through the knockout in the junction box bracket.
- Wire the junction box and reattach it to the bracket by inserting the tab in the slot and attaching with screw previously removed. Ensure that a Romex connector is used to attach the electrical wires to the junction box.

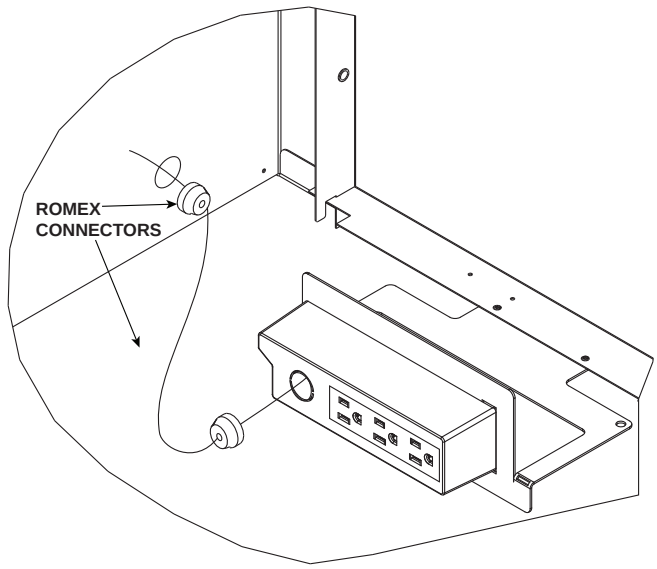

***NOTICE: DO NOT** wire 110-120 VAC to wall switch.*

Figure 8.1 Junction Box Detail

Accessories Requirements

- This appliance may be used with a wall switch, wall mounted thermostat and/or a remote control.

Wiring for optional Hearth & Home Technologies approved accessories should be done now to avoid reconstruction. Follow instructions that come with those accessories.

Electrical Service and Repair

WARNING! Risk of Shock! *Label all wires prior to disconnection when servicing controls. Wiring errors could cause improper and dangerous operation. Verify proper operation after servicing.*

WARNING! Risk of Shock! *Replace damaged wire with type 105º C rated wire. Wire must have high temperature insulation.*

B. IntelliFire Touch® Ignition System Wiring

- Wire the appliance junction box to 110-120 VAC for proper operation of the appliance.

WARNING! Risk of Shock or Explosion! DO NOT *wire IPI controlled appliance junction box to a switched circuit. Incorrect wiring will override IPI safety lockout.*

- Refer to Figure 8.2, IntelliFire Touch® (IPI) Wiring Diagram.
- This appliance is equipped with an Intellifire® control valve which operates on a 6 volt system.
- Plug the 6 volt transformer plug into the appliance junction box to supply power to the unit OR install 4 AA cell batteries (not included) into the battery pack before use.

NOTICE: *Batteries should only be used as a power source in the event of an emergency power outage. Batteries should not be used as a primary long-term power source. Battery polarity must be correct when installing batteries. When using batteries as a power source, the 6-volt transformer must be unplugged from the receptacle.*

Do not store batteries in the battery pack when the appliance is powered by the 6 volt transformer connected to permanent electrical service.

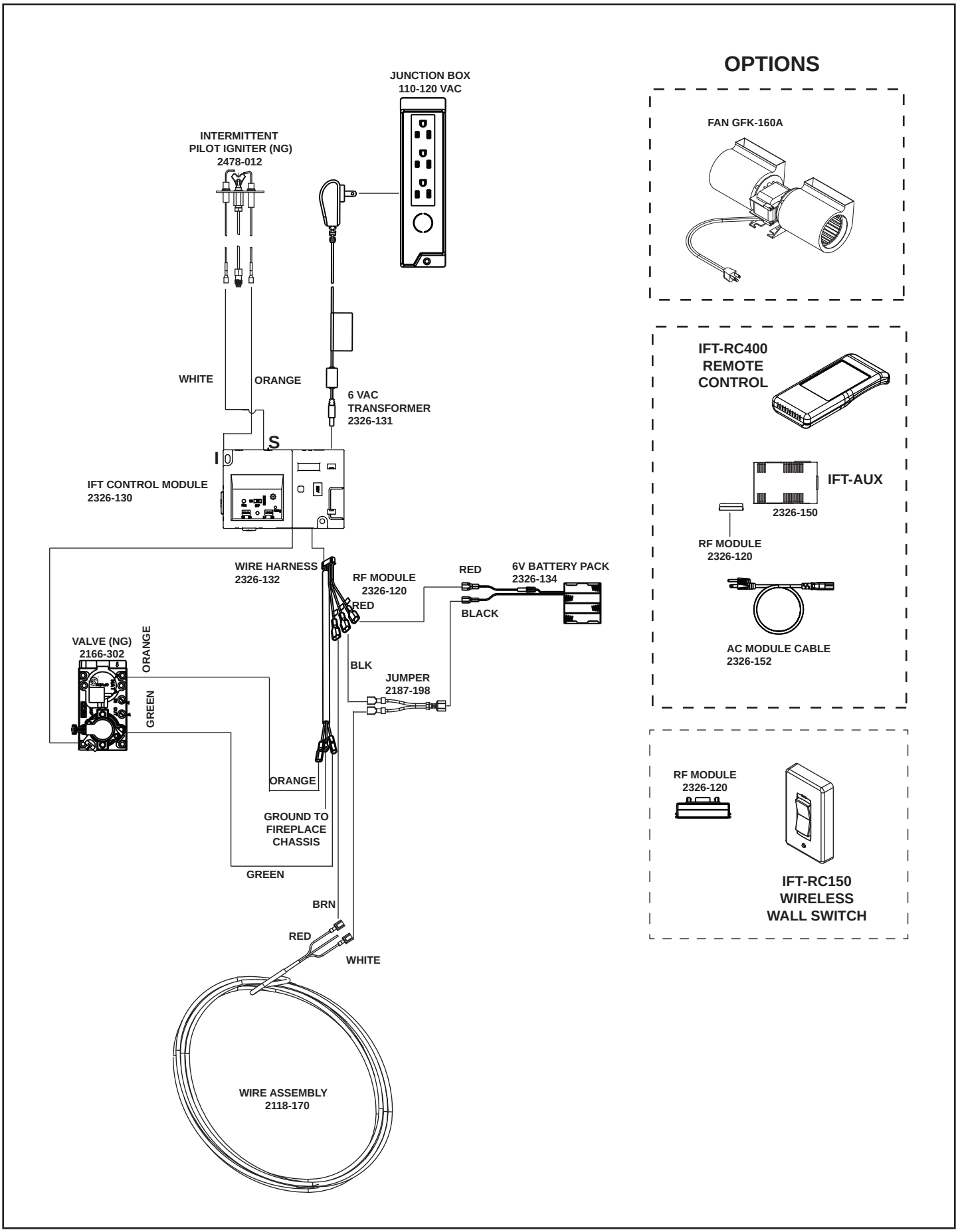

Figure 8.2 IntelliFire Touch Wiring With Wall Switch

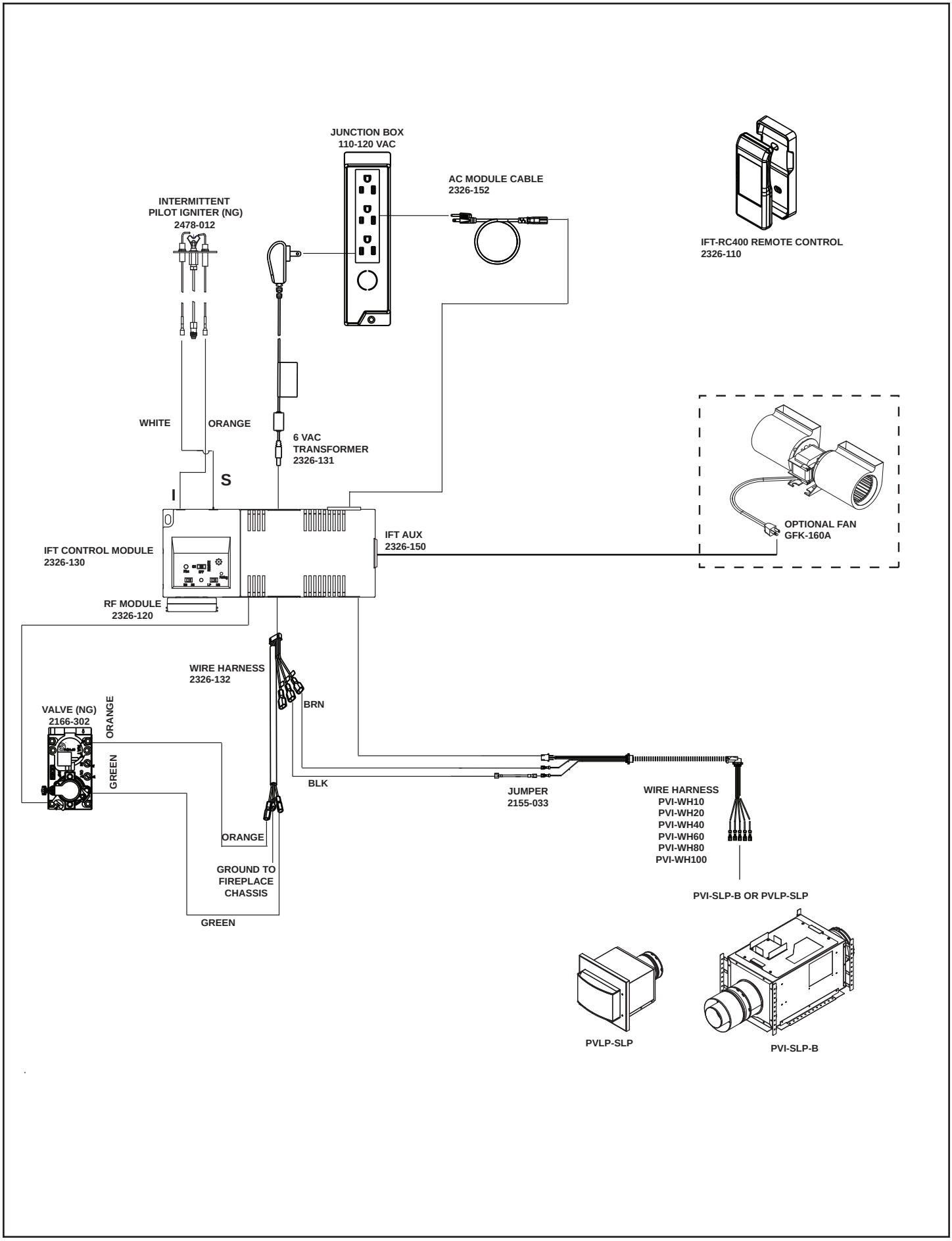

Figure 8.3 IntelliFire Touch Wiring With Optional Power Vent

9 Gas Information

⚠ WARNING

Risk of Fire! Risk of Explosion! Risk of Asphyxiation!

Follow all instructions and warnings for installing and servicing gas line.

- Gas line installation and service must be performed by a qualified installer or licensed plumber in accordance with all applicable codes for the installation location (NFPA 54 / ANSI Z223.1, the current International Fuel Gas Code, or CAN/CSA B149 in Canada) (In the Commonwealth of Massachusetts installation must be performed by a licensed plumber or gas fitter).
- Check all fittings and connections by means of a listed combustible gas detector, a noncorrosive leak detection fluid, or other approved leak detection method. ***DO NOT*** use open flame.

⚠ WARNING

Risk of Fire! Risk of Explosion!

Pressure exceeding 1/2 PSIG (14 in. w.c. / 3.5 kPa) will damage gas valve control.

- Disconnect appliance and its manual shutoff valve BEFORE line pressure testing.
- Cap outlet on piping system at appliance connection BEFORE line pressure testing.
- Connect appliance AFTER confirming piping system pressure is equal or less than 1/2 PSIG (14 in. w.c./ 3.5 kPa).

A. Fuel Conversion

- Make sure the appliance is compatible with available gas types.
- Conversions must be made by a qualified service technician using Hearth & Home Technologies specified and approved parts.

B. Gas Pressure

- Install pressure regulator upstream of gas valve if line inlet pressure exceeds 1/2 PSIG.
- Recommended inlet pressure for optimal appliance performance: 7.0 in. w.c. (NG) 12.0 in. w.c. (Propane)
- Pressure requirements when in operation are:

Gas Pressure	Natural Gas	Propane
Minimum inlet pressure	5.0 in. w.c.	11.0 in. w.c.
Maximum inlet pressure	10.0 in. w.c.	13.0 in. w.c.
Manifold pressure	3.5 in. w.c.	10.0 in. w.c.

- Verify inlet pressure is within specified range, including when other household gas appliances are operating.

Note: A listed (and Commonwealth of Massachusetts approved) 1/2 in. (13 mm) T-handle manual shut-off valve and flexible gas connector are connected to the 1/2 in. (13 mm) control valve inlet.

- **If substituting for these components, please consult local codes for compliance.**

C. Gas Connection and Gas Line Purging

⚠ WARNING

Risk of Fire! Risk of Explosion!

Gas buildup during line connection and purging could ignite.

- Support gas control when attaching pipe to prevent bending gas line.
- Gas line installation and purging of the gas fuel line MUST be performed by a qualified service technician or a licensed plumber in accordance with the applicable gas code for the installation location (NFPA 54 / ANSI Z223.1, the current International Fuel Gas Code, or CAN/CSA B149 in Canada).
- Use a listed combustible gas detector, a noncorrosive leak detection fluid, or other approved leak detection method to check all fittings and connections for gas leaks before lighting the appliance.
- Ensure ventilation.
- Eliminate ignition sources, such as sparks or open flames.

- Refer to Section 3 for location of gas line access in appliance.
- Pipe incoming gas line into valve compartment.
- The gap between supply piping and gas access hole may be sealed with caulk or aluminum foil tape with a minimum of 300 ºF continuous exposure rating or stuffed with non-combustible, unfaced insulation to prevent cold air infiltration.
- Ensure that gas line does not come in contact with outer wrap of the appliance. Follow local codes.
- Connect incoming gas line to the 1/2 in. (13 mm) NPT connection on manual shutoff valve.
- A small amount of air will be in the gas supply line and must be purged. Light the appliance to allow air to purge through the pilot assembly.

D. High Altitude Installations

NOTICE: *If the heating value of the gas has been reduced, these rules do not apply. Check with your local gas utility or authorities having jurisdiction.*

When installing above 2000 feet elevation:

- In the USA: Reduce input rate 4% for each 1000 feet above 2000 feet.
- In CANADA: Input ratings are certified without a reduction of input rate for elevations up to 4500 feet (1370 m)above sea level. Please consult provincial and/or local authorities having jurisdiction for installations at elevations above 4500 feet (1370 m).

Check with your local gas utility to determine proper orifice size.

E. Air Shutter Setting

Air shutter settings should be adjusted by a qualified service technician at the time of installation. The air shutter is set at the factory for minimum vertical vent run. Minimum vent run consists of enough horizontal vent pipe to exit 2 X 6 wall construction (approximately 8 inches). Adjust air shutter for longer vertical runs. See Figure 4.14.

- Loosen the wing nut.
- Move the wing nut to adjust the air shutter. See Figure 9.1.
- Tighten the wing nut when adjustment is complete.

NOTICE: *If sooting occurs, provide more air by opening the air shutter.*

Note: Adjust air shutter after flame has reached full maturity (approximately 20-40 minutes).

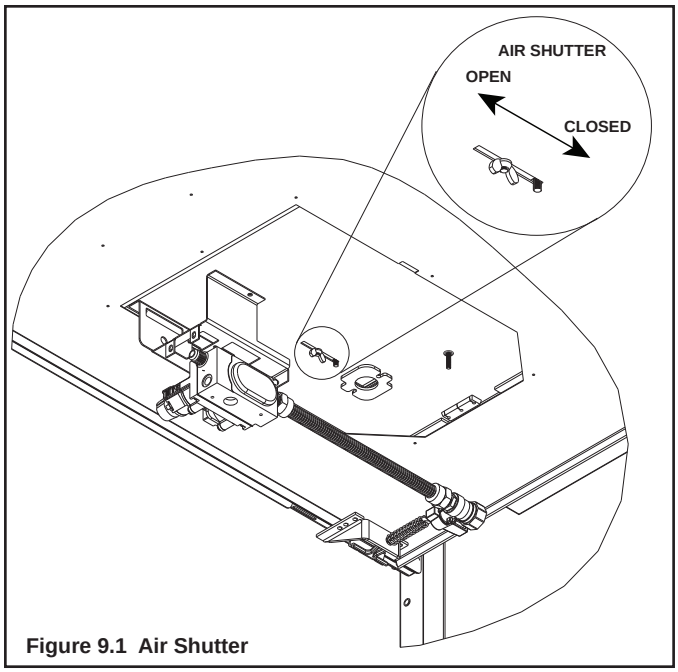

Figure 9.1 Air Shutter

Air Shutter Settings (Factory Set to Minimum Vent Run)

GAS TYPE	MIN. VENT RUN	MAX. VENT RUN
NG	1/8 in.	Full Open
PROPANE	Full Open	Full Open

Minimum and maximum shutter settings were determined per the vent configuration shown in Figure 4.20.

- Minimum vent run consists of enough horizontal vent pipe to exit 2 X 6 wall construction (approximately 8 inches).
- Maximum vent run consists of “H_1 Maximum” shown in Figure 4.20.

Note: All vent runs may need to be evaluated for ideal shutter settings. Shutter distances may vary due to vent run, fuel quality, and elevation.

10 Finishing

A. Facing Material

- Metal front faces may be covered with non-combustible materials only.
- Facing and/or finishing materials must not interfere with air flow through louvers, operation of louvers or doors, or access for service.
- Facing and/or finishing materials must never overhang into the glass opening.
- Observe all clearances when applying combustible materials.
- Seal joints between the finished wall and appliance top and sides using a 300 ºF minimum sealant. Refer to Figure 10.1.

***WARNING! Risk of Fire! DO NOT** apply combustible materials beyond the minimum clearances. Comply with all minimum clearances to combustibles as specified in this manual. Overlapping materials could ignite and will interfere with proper operation of decorative fronts and louvers.*

***NOTICE:** Surface temperatures around the appliance will become warm while the appliance is in operation. Ensure finishing materials used for all surfaces (floor, walls, mantels, etc.) will withstand temperatures up to 190ºF.*

If using vinyl flooring, refer to Section 3.D.

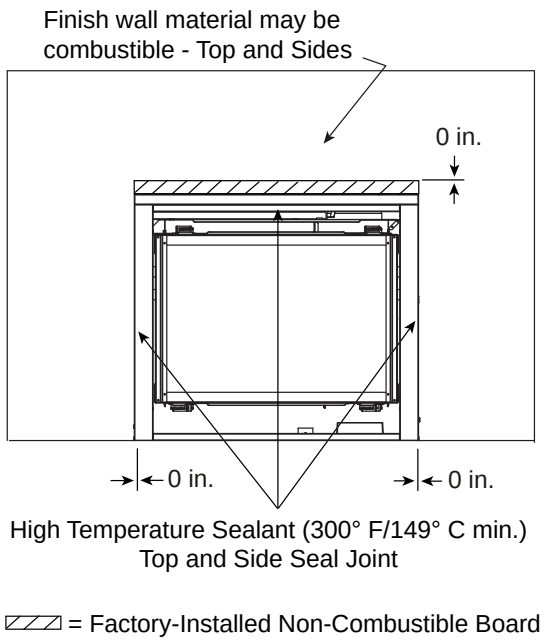

Figure 10.1 Non-combustible Facing Diagram

B. Mantel and Wall Projections

WARNING! Risk of Fire! *Comply with all minimum clearances as specified. Framing closer than the minimums listed must be constructed entirely of non-combustible materials (i.e., steel studs, concrete board, etc.).*

> **Note:** Measurement is taken from top of the opening, NOT the top of the fireplace.

Combustible Mantel

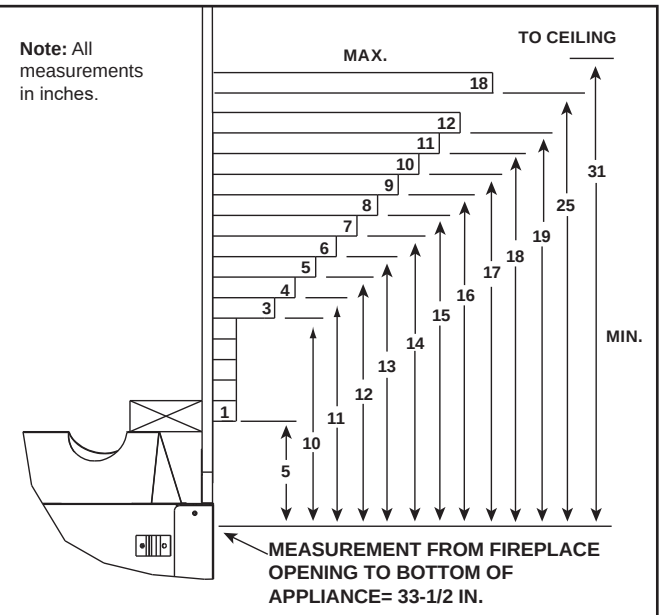

Figure 10.2 Minimum Vertical and Maximum Horizontal Dimensions of Combustibles

Non-Combustible Mantel

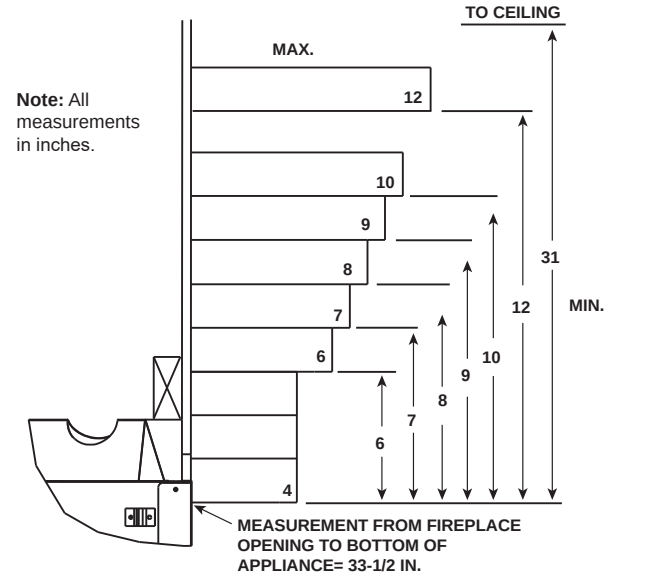

Figure 10.3 Minimum Vertical and Maximum Horizontal Dimensions of Non-Combustibles

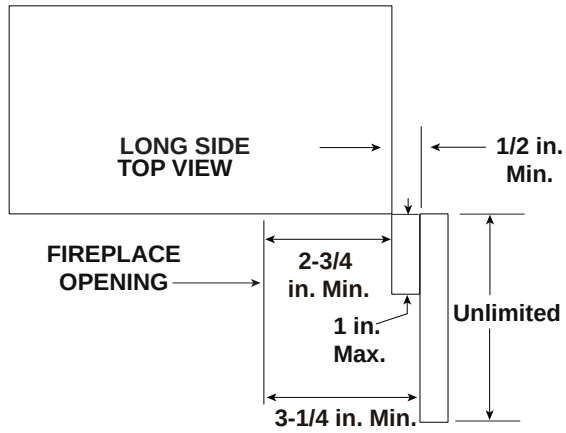

Note: Clearance from opening to perpendicular wall.

Figure 10.4 Combustible Mantel Leg or Wall Projections (Acceptable on both sides of opening)

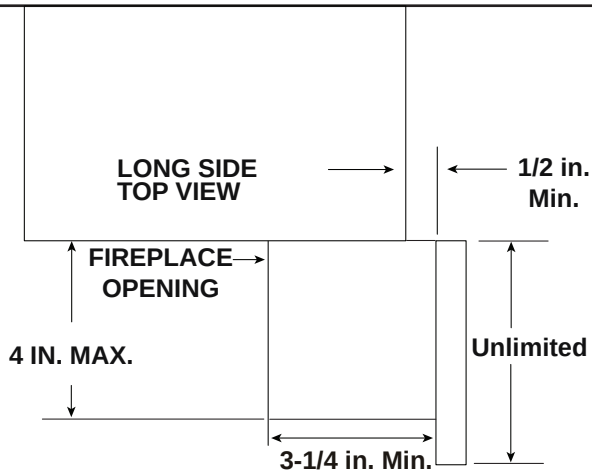

Figure 10.5 Non-Combustible Mantel Leg (Acceptable on both sides of opening)

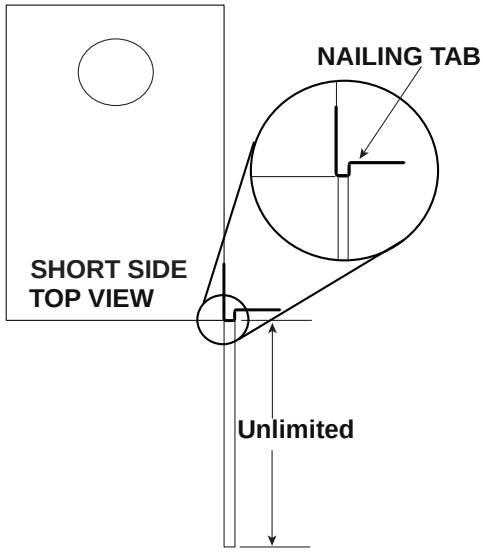

Figure 10.6 Combustible or Non-Combustible Mantel Leg (Short Side-Acceptable on both sides of opening)

C. Decorative Front Finishing

Only decorative fronts certified for use with this appliance model may be used. Contact your dealer for a list of decorative fronts that may be used.

11 Appliance Setup

A. Remove Fixed Glass Assembly

WARNING! Risk of Asphyxiation! *Handle fixed glass assembly with care. Inspect the gasket to ensure it is undamaged and inspect the glass for cracks, chips or scratches.*

- ***DO NOT*** *strike, slam or scratch glass.*
- ***DO NOT*** *operate fireplace with glass removed, cracked, broken or scratched.*
- *Replace as a complete assembly.*

Removing Fixed Glass Assembly

- Pull the four glass latches out of the grooves on the glass frame top and bottom.
- Remove the glass door from the appliance.
- Multiple sides may be able to be removed based upon model.

Replacing Fixed Glass Assembly

- Replace the glass door on the appliance.
- Pull out the four glass latches and place in the grooves on the glass frame top and bottom.
- Make sure all sides are replaced properly.

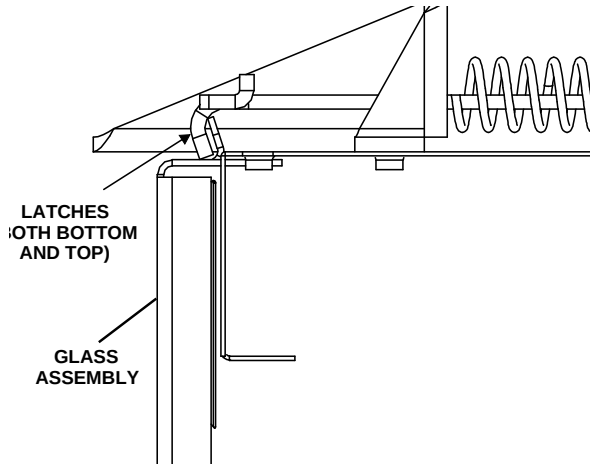

Figure 11.1 Fixed Glass Assembly

B. Remove the Shipping Materials

Remove shipping materials from inside or underneath the firebox.

- The splatter guard is a piece of corrugated material used to protect the appliance during the installation process before finishing work on the whole hearth is complete. Splatter guards may be factory installed or accompany the decorative front of the appliance, depending on the fireplace model. Splatter guards must be removed before appliance is fired.

WARNING! Risk of Fire! *Close the ball valve before installing the splatter guard to prevent accidental lighting. Remove the splatter guard before lighting the appliance.*

Step 1. Turn off gas to valve. Red gas shutoff knob is located on ball valve.

To install the Splatter Guard:

Step 2. Crease flap on top side of splatter guard using the scored line as the guide. See Figure 11.3.

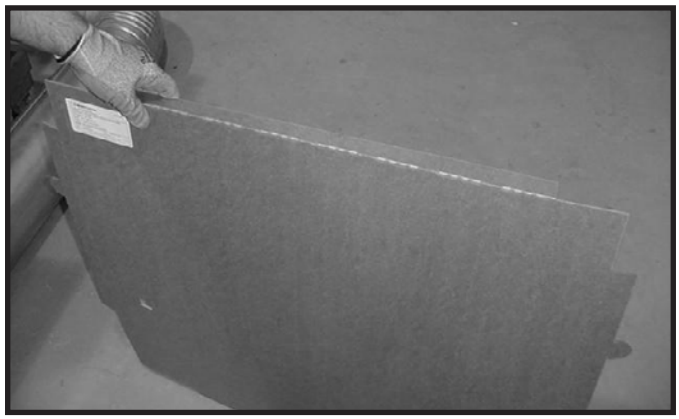

Figure 11.2

Step 3. Crease flaps on left and right sides of splatter guard using the scored line as the guide. See Figure 11.3

Figure 11.3 Folding of Right and Left Sides of Splatter Guard

Step 4. Center the splatter guard in front of the unit as shown in Figure 11.4. Place the splatter guard in the unit by guiding the top flap into proper position and then continuing to guide the tabs on the side flaps into the top slot on the left and right sides of the appliance. The top slot is indicated in Figure 11.5. Take care not to bend or break off the tabs.

Figure 11.4 Installation of Splatter Guard

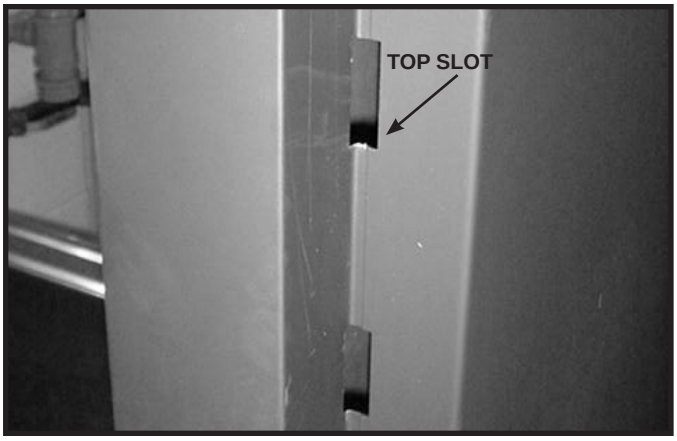

Figure 11.5 Top slot

Step 5. Fold bottom flap along score line as indicated in Figure 11.6 and tuck into valve access area of appliance. Splatter guard should fit securely on front of unit.

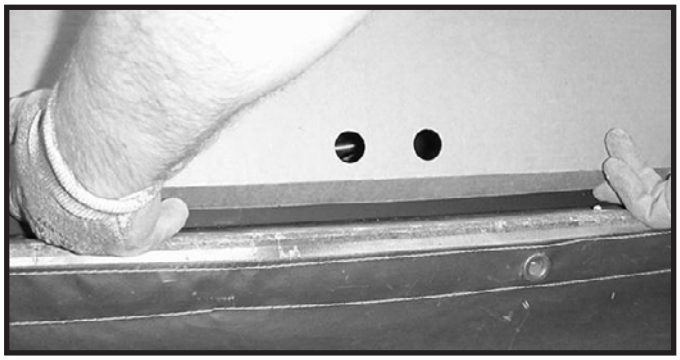

Figure 11.6 Folding Bottom Flap

Figure 11.7 Prepare to Open Lower Access Panel

Step 6. To open lower access panel of splatter guard, place one hand above score line and place two fingers from other hand in the round holes on the front of the splatter guard. See Figure 11.7. Pull out and fold up the panel as shown in Figure 11.8. Disengage the tabs on left and right bottom of splatter guard and fit them into the square holes. The tabs are now inside the front of the splatter guard; carefully bend them down. See Figure 11.9.

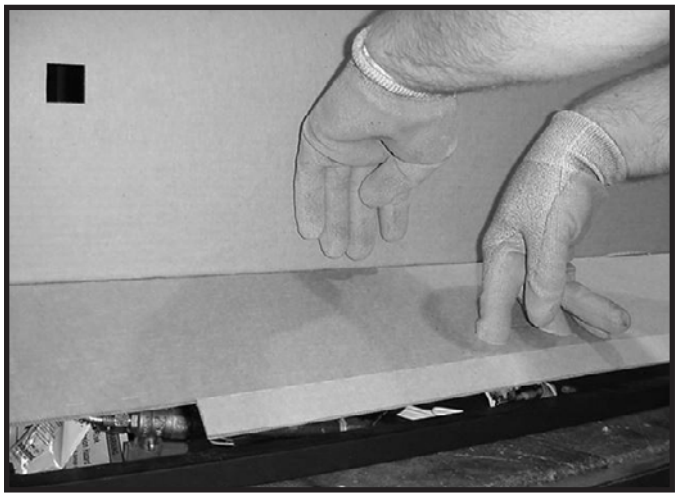

Figure 11.8 Opening Lower Access Panel

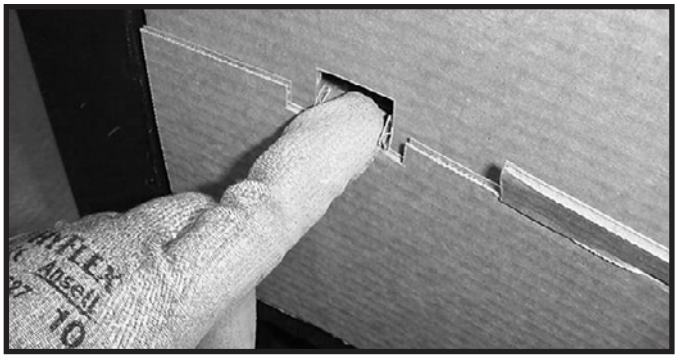

Figure 11.9 Securing Tabs Inside Front of Splatter Guard

Once plumbing and wiring are complete on the fireplace, the lower access panel may be closed until the time that the splatter guard must be removed for firing the appliance.

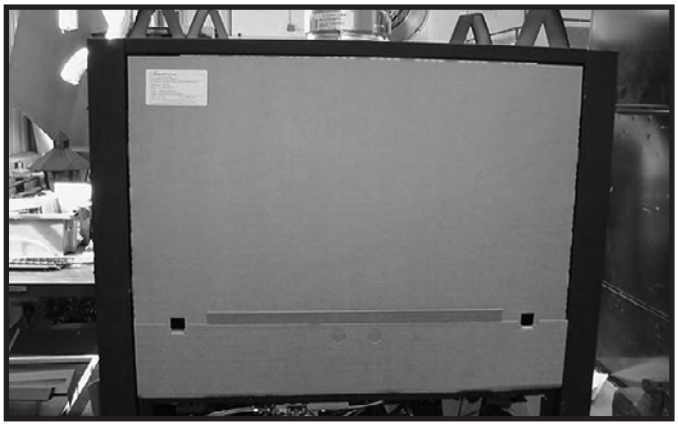

Figure 11.10 Splatter Guard with Lower Access Panel Open

To Close the Lower Access Panel:

Carefully disengage the tabs from the square holes and bend the access panel to its original position. Bend the center bottom flap and insert it into the bottom of the appliance.

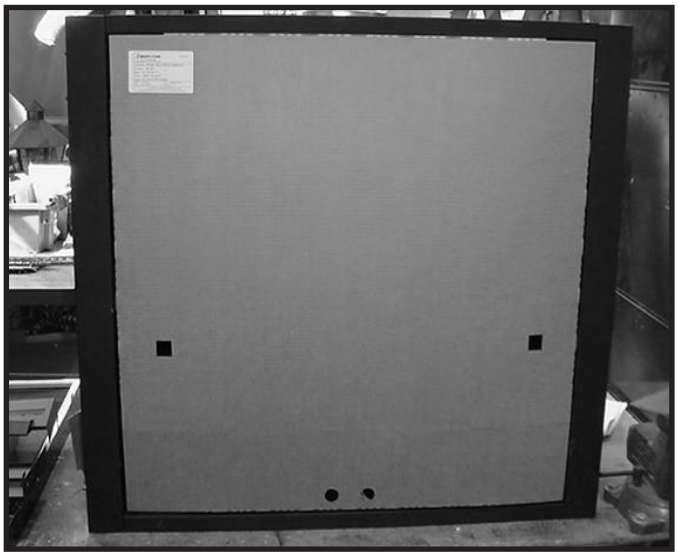

Figure 11.11 Splatter Guard with Lower Access Panel Closed

To Remove the Splatter Guard:

Carefully grab splatter guard on or near the vertical center on the left and right sides. Pull outward gently, but firmly, taking care not to tear or remove the inserted tabs.

C. Clean the Appliance

Clean/vacuum any sawdust that may have accumulated inside the firebox or underneath in the control cavity.

D. Glowing Ember Placement

Place glowing embers as shown in Figure 11.13.

WARNING! Risk of Explosion! Follow ember placement instructions in manual. DO NOT place embers directly over burner ports. Replace ember material annually. Improperly placed embers interfere with proper burner operation.

Placing the Ember Material

Ember material is shipped with this gas appliance. To place the ember material:

- Embers may only be placed in areas as shown in Figure 11.12 Care should be taken not to cover the lighting trail of ports near pilot assembly as shown in Figure 11.12.
- When placing Glowing Embers® onto the burner care should be taken so that the ports are not covered. Place the dime-size ember pieces. See Figure 11.12. Failure to follow this procedure will likely cause lighting and sooting problems.
- Place Lava Rock on areas of base pan away from the burner as shown in Figure 11.13. Do not place lava rock on burner. Use this material to give the appliance a realistic ash bed.
- Save the remaining ember materials for use during appliance servicing. The embers provided should be enough for 3 to 5 applications.

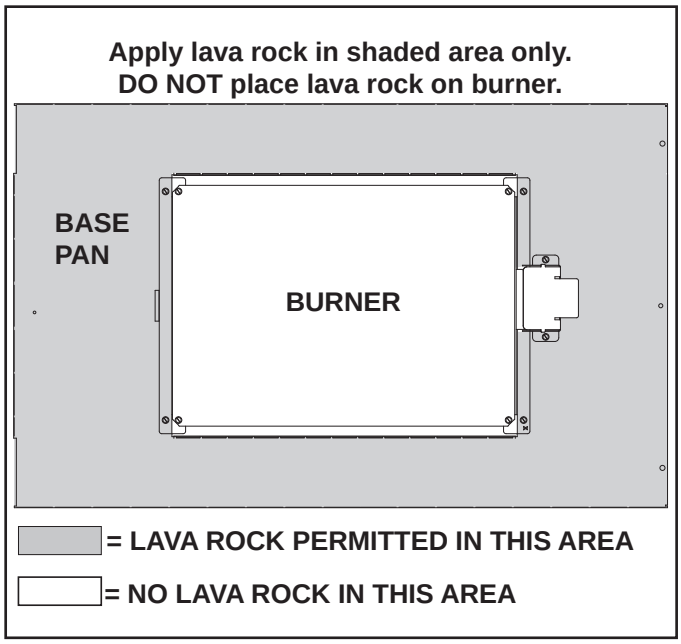

Figure 11.13 Placement of Lava Rock

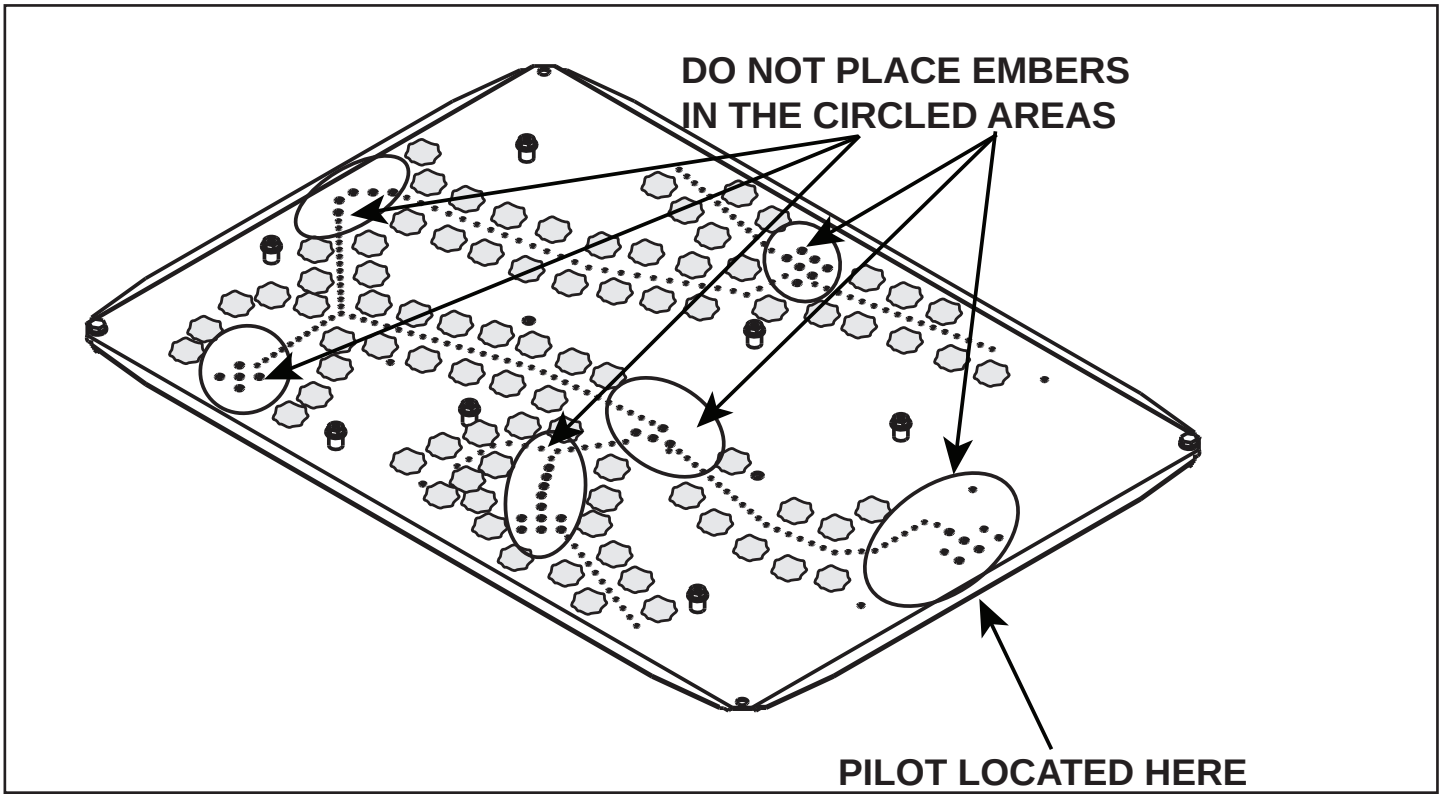

Figure 11.12 Placement of Embers

LOG PLACEMENT INSTRUCTIONS

CAUTION: DO NOT reposition logs that have been factory installed! Follow these instructions to position the logs that were packaged separately.

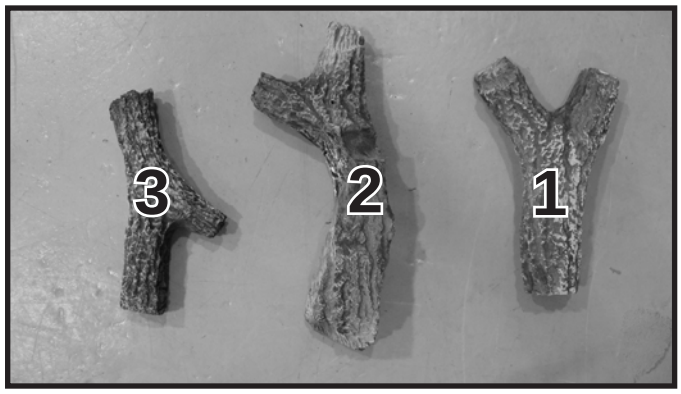

Log Set Components

Figure 1. Log Assembly Location

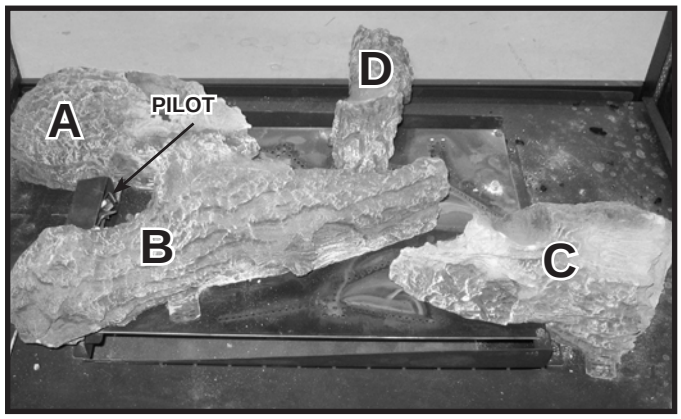

Figure 2. Factory Installed Logs and Pilot Position

CAUTION! Logs are fragile! Carefully remove the logs and cardboard tray from the inside of the fireplace. See Figure Remove the microfoam and inspect the logs for damage. Inspect the four factory installed logs for damage. Locate the pilot in order to verify your position in relation to the appliance. See Figure 2.

Models: LCOR-DV36IN, RCOR-DV36IN

(For Model RCOR-DV36IN, see next page .)

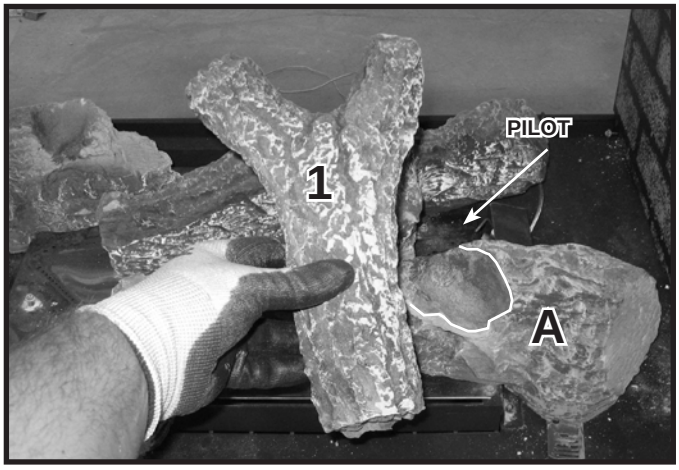

Figure 3. Placement of Log #1

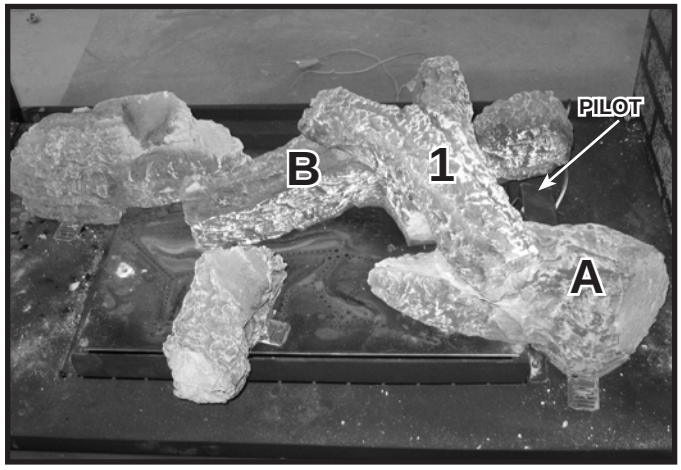

Figure 4. Placement of Log #1

STEP 1. Log #1 (SRV2129-704): Place Log #1 on Log A. The end and bottom of Log #1 fit into the indentation on Log A highlighted in Figure 3. The Y-shaped end of Log #1 will rest on the smooth area of Log B as shown in Figure 4.

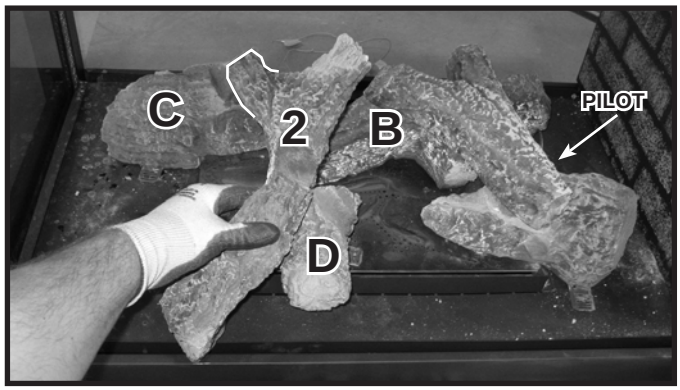

Figure 5. Placement of Log #2

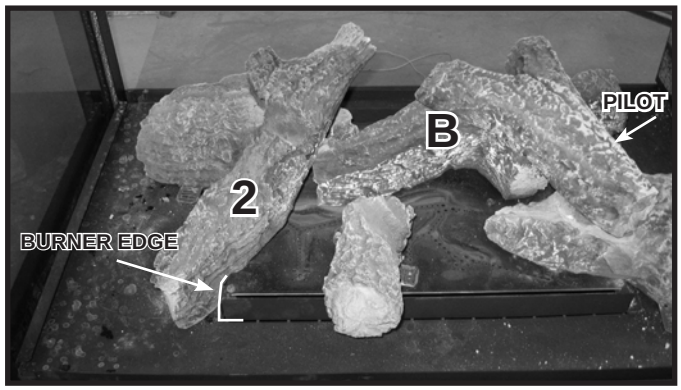

Figure 6. Placement of Log #2

STEP 2. Log #2 (SRV2129-705): Locate portion of Log #2 that is highlighted in Figure 5. Place that portion of Log #2 on the indentation on Log C. Log #2 will rest on the tip of Log B. Slide the bottom of Log #2 up to the edge of the burner as shown in Figure 6.

Figure 7. Placement of Log #3

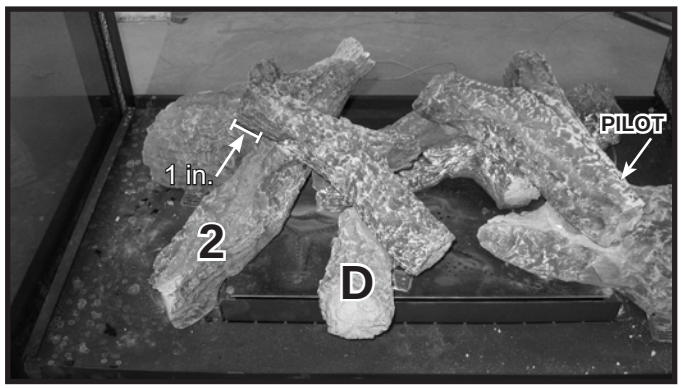

Figure 8. Placement of Log #3

STEP 3. Log #3 (SRV2129-707): Place Log #3 so that it rests on the indentations located on Log #2 and Log D. Log 3 should extend beyond Log #2 by one inch.

Model: RCOR-DV36IN

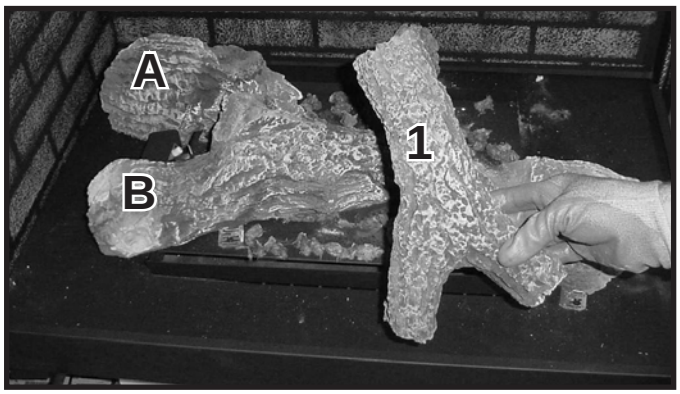

Figure 9. Placement of Log #1

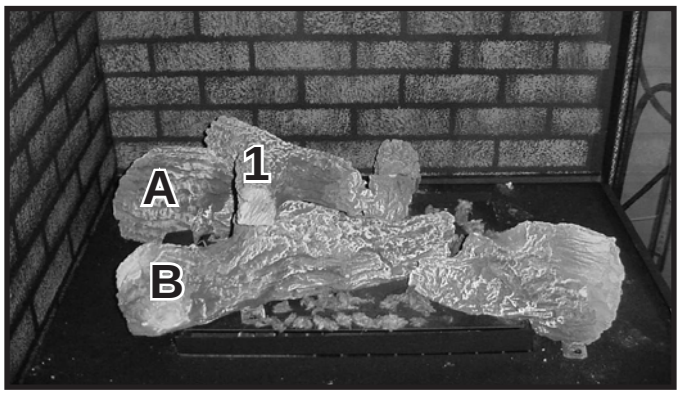

Figure 10. Placement of Log #1

STEP 1. Log #1 (SRV2129-704): Place Log #1 on Log A. The end and bottom of Log #1 fit into the indentation on Log A highlighted in Figure 9. The Y-shaped end of Log #1 will rest on the smooth area of Log B as shown in Figure 10.

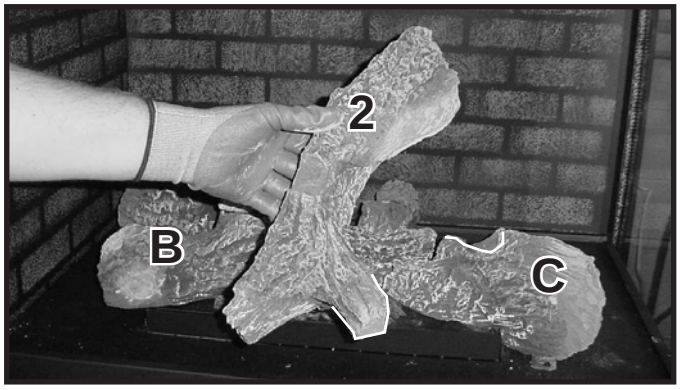

Figure 11. Placement of Log #2

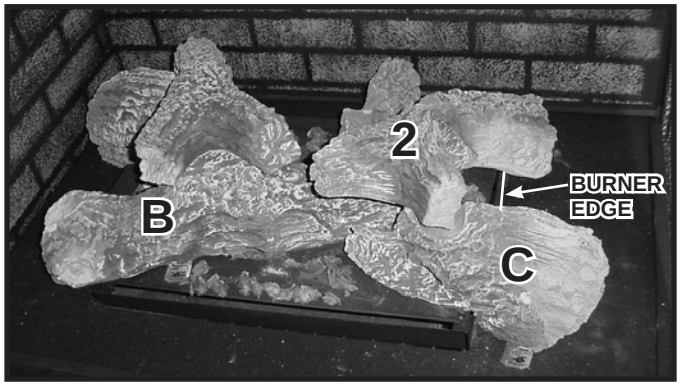

Figure 12. Placement of Log #2

STEP 2. Log #2 (SRV2129-705): Locate portion of Log #2 that is highlighted in Figure 11. Place that portion of Log #2 on the indentation on Log C. Log #2 will rest on the tip of Log B. Slide the bottom of Log #2 up to the edge of the burner as shown in Figure 12.

Figure 13. Placement of Log #3

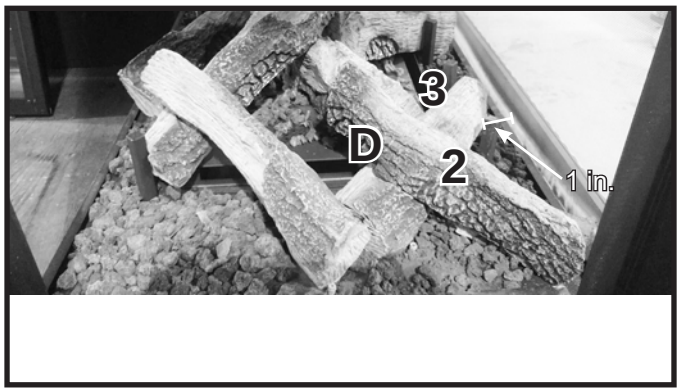

Figure 14. Placement of Log #3

STEP 3. Log #3 (SRV2129-707): Place Log #3 so that it rests on the indentations located on Log #2 and Log D. Log 3 should extend beyond Log #2 by one inch.

F. Install Fixed Glass Assembly

WARNING! Risk of Asphyxiation! *Handle fixed glass assembly with care. Inspect the gasket to ensure it is undamaged and inspect the glass for cracks, chips or scratches.*

- ***DO NOT*** *strike, slam or scratch glass.*
- ***DO NOT*** *operate fireplace with glass removed, cracked, broken or scratched.*
- *Replace as a complete assembly.*
- Replace the glass door on the appliance.
- Pull out the four glass latches and place in the grooves on the glass frame top and bottom.
- Make sure all sides are replaced properly.

A. Vent Components Diagrams

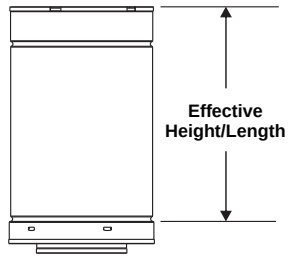

DVP Pipe (see chart)

Pipe	Effective Length	
	Inches	Millimeters
DVP4	4	102
DVP6	6	152
DVP12	12	305
DVP24	24	610
DVP36	36	914
DVP48	48	1219
DVP6A	3 to 6	76 to 152
DVP12A	3 to 12	76 to 305

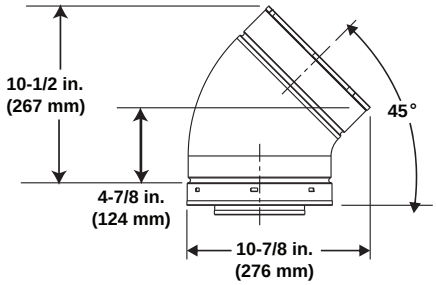

DVP45 (45º Elbow)

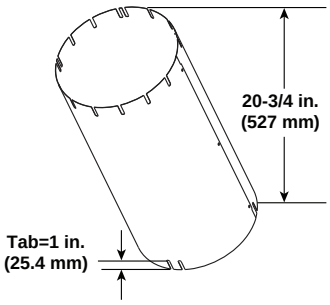

Finished Height: 19-3/4 in./502 mm
UNIV-AS2 (Attic Insulation Shield)

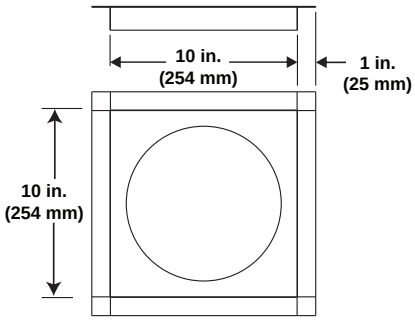

DVP-FS (Ceiling Firestop)

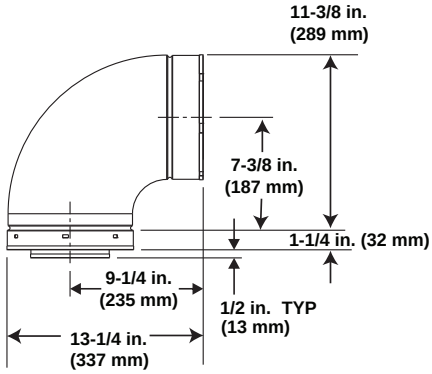

DVP90ST (90° Elbow)

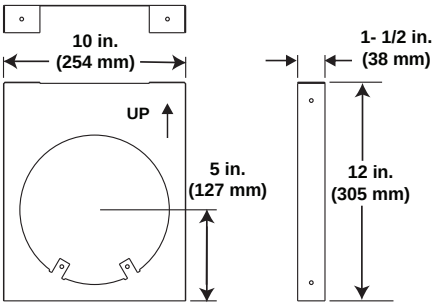

DVP-HVS (Vent Support)

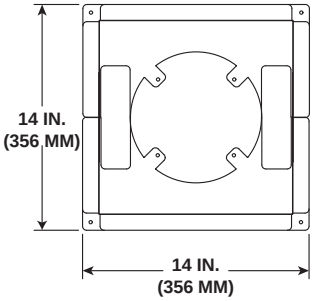

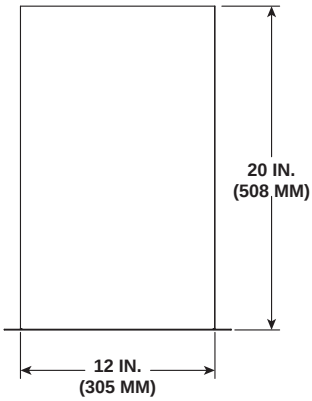

DVP-RDS
ROOF DECK INSULATION SHIELD

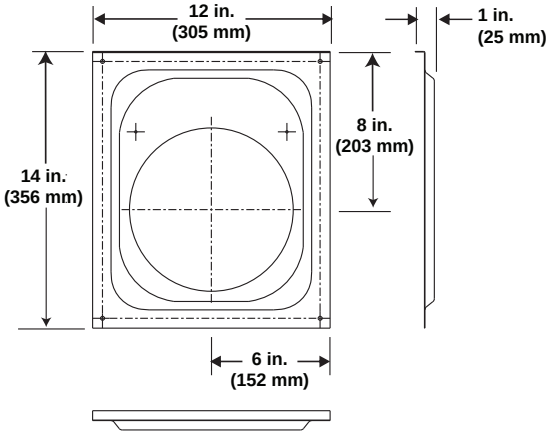

DVP-WS (Wall Shield Firestop)

Figure 12.1 DVP Vent Components

A. Vent Components Diagrams (*continued*)

Note: Heat shields MUST overlap by a minimum of 1-1/2 in. (38 mm). **The heat shield is designed to be used on a wall 4 in. to 7-1/4 in. (102 mm to 184 mm) thick.** If wall thickness is less than 4 in. (102 mm) the existing heat shields must be field trimmed. If wall thickness is greater than 7-1/4 in. (184 mm) a DVP-HSM-B will be required.

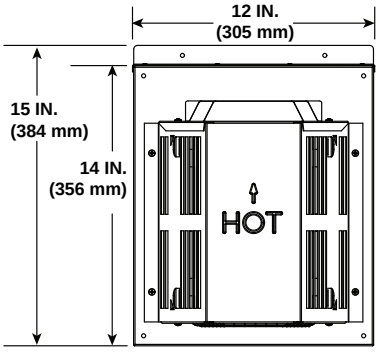

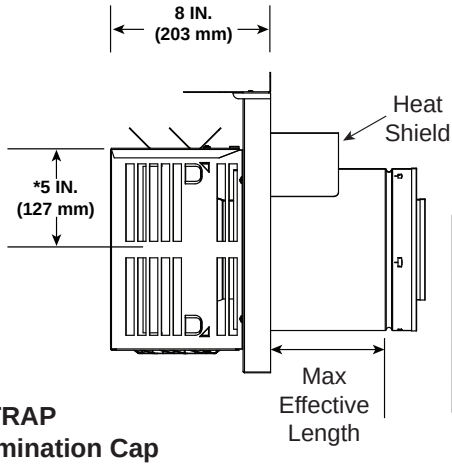

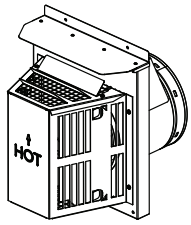

* Center of the horizontal vent pipe to the vertical measuring surface.

Term Cap	Minimum Effective Length	Maximum Effective Length
Trap1	3-1/8 in.	4-5/8 in.
	79 mm	117 mm
Trap2	5-3/8 in.	9-3/8 in.
	137 mm	238 mm

DVP-TRAP
Horizontal Termination Cap

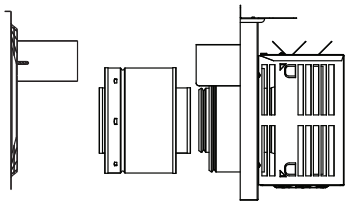

DVP-TRAP1

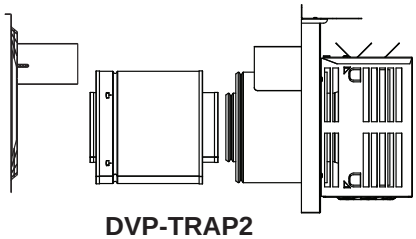

DVP-TRAP2

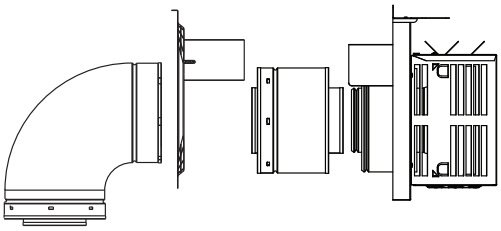

DVP-TRAPK1

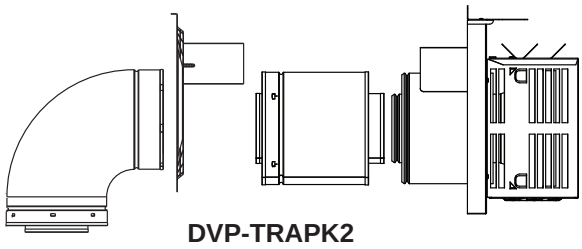

DVP-TRAPK2

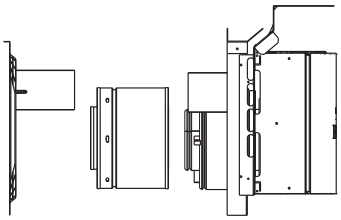

DVP-HPC1
Can adjust 2-1/8 in. (4-1/4 to 6-3/8)

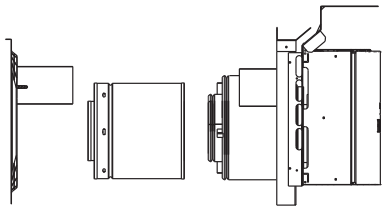

DVP-HPC2
Can adjust 4-1/8 in. (6-3/8 to 10-1/2)

Figure 12.2 DVP Vent Components

A. Vent Components Diagrams (*continued*)

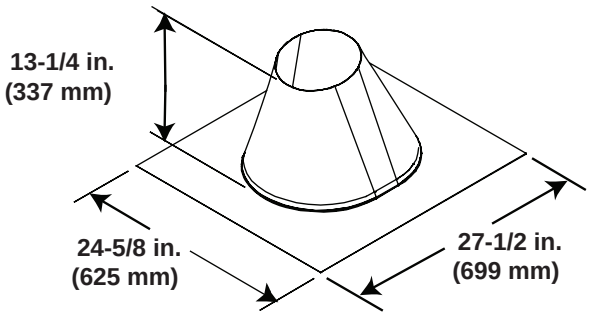

RF6
Roof Flashing

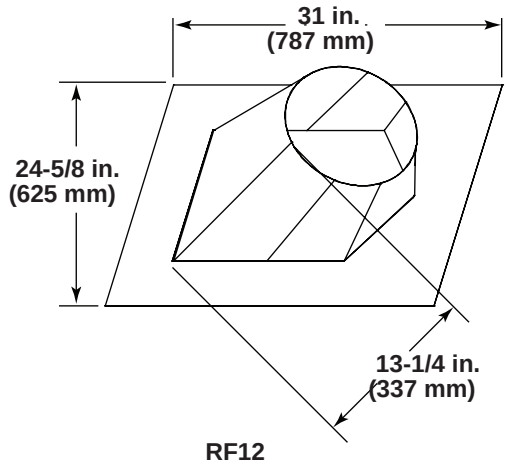

RF12
Roof Flashing

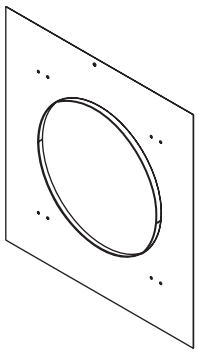

DVP-TRAPFL
Flashing

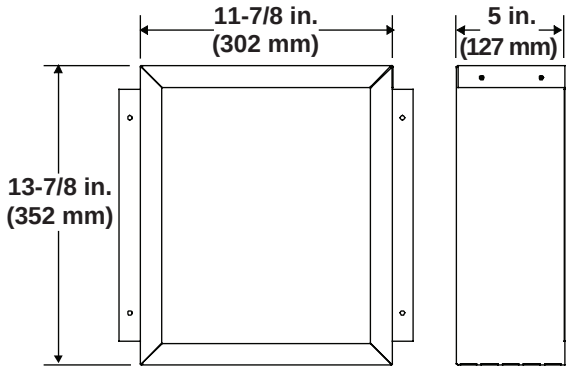

DVP-BEK2
DVP-HPC Cap Brick Extension

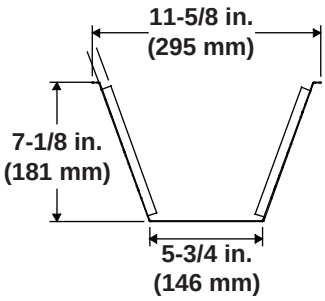

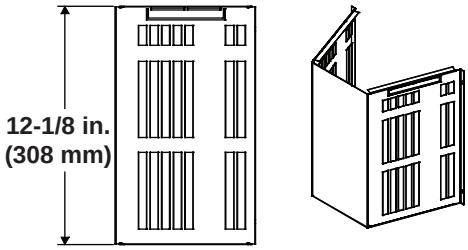

COOL-ADDM
Cap Shield

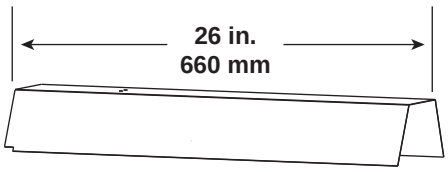

DVP-HSM-B
Extended Heat Shield

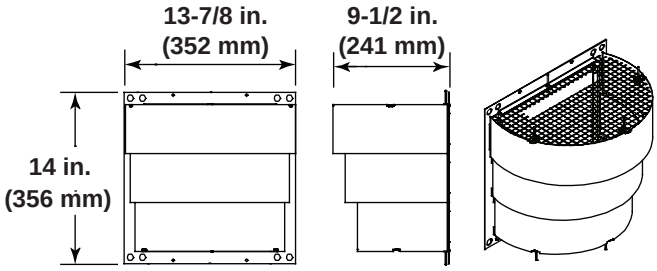

DRC-RADIUS
Cap Shield

Figure 12.3 DVP Vent Components

A. Vent Components Diagrams (*continued*)

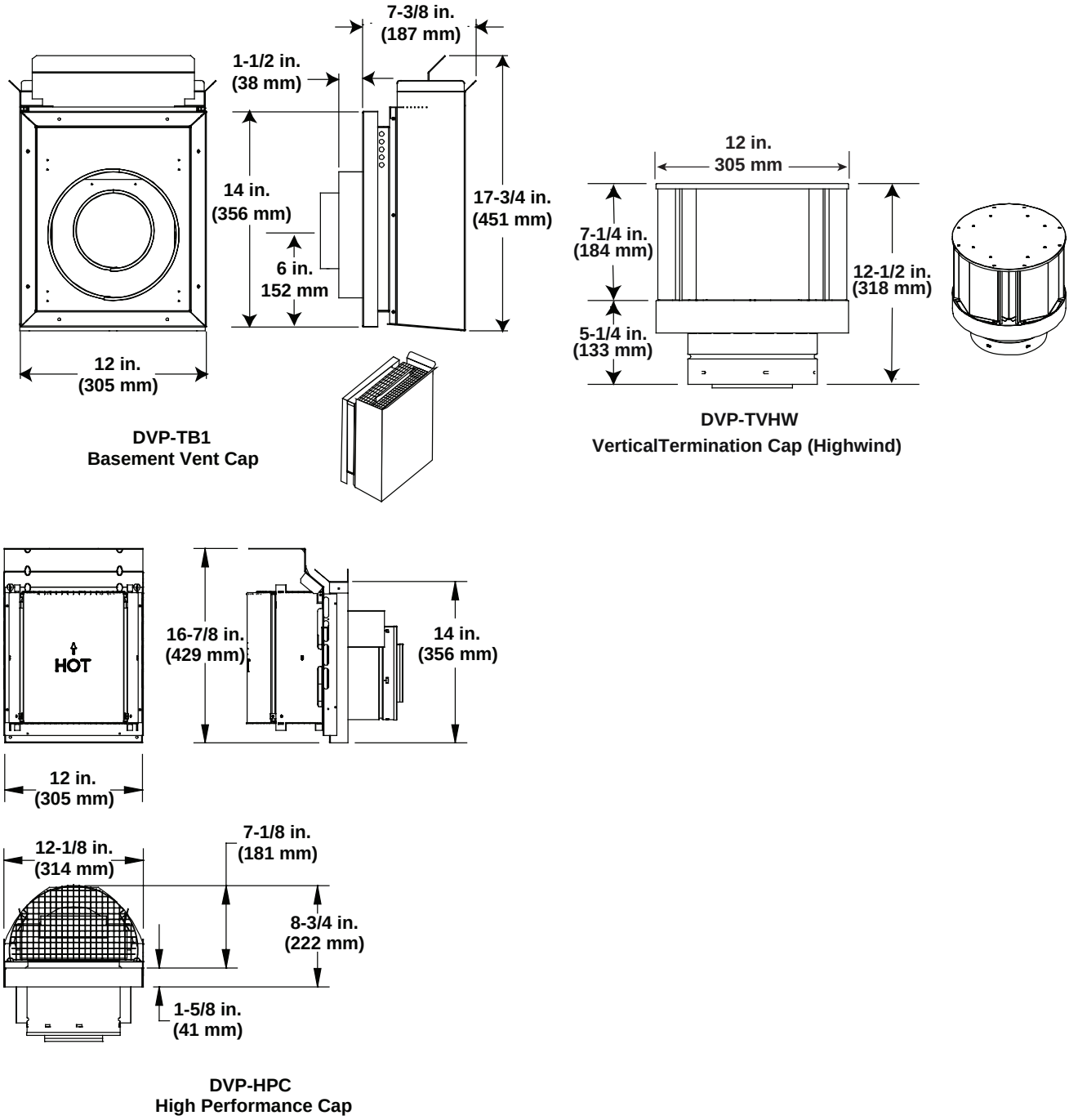

Figure 12.4 DVP Vent Components

A. Vent Components Diagrams *(continued)*

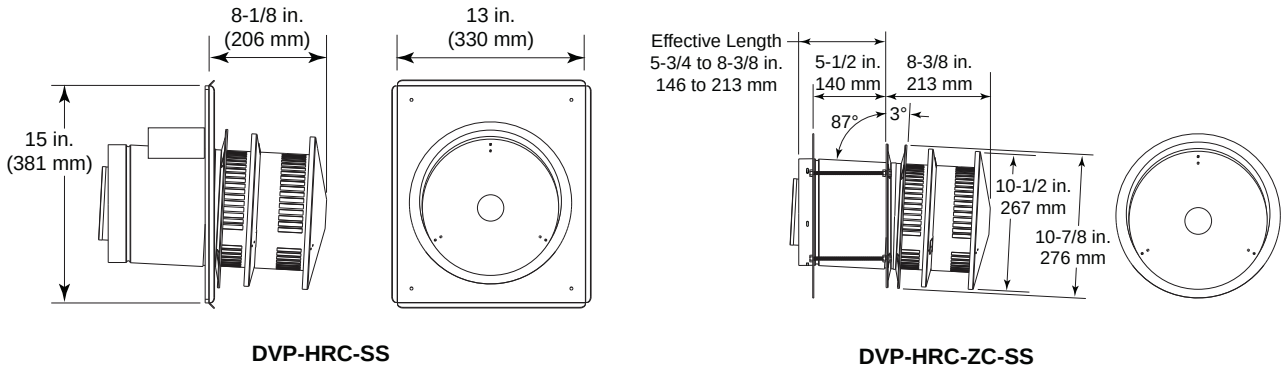

Figure 12.5 Vent Components

DECORATIVE TERMINATIONS/SHROUDS

Only use listed decorative termination caps/shrouds with Hearth & Home Technologies approved venting systems. This applies to both DVP and SLP venting systems.

Decorative Terminations Caps/Shrouds

DTO134
DTO146
DTS134
DTS146
LDS33
LDS46
LDS-BV

A. Vent Components Diagrams *(continued)*

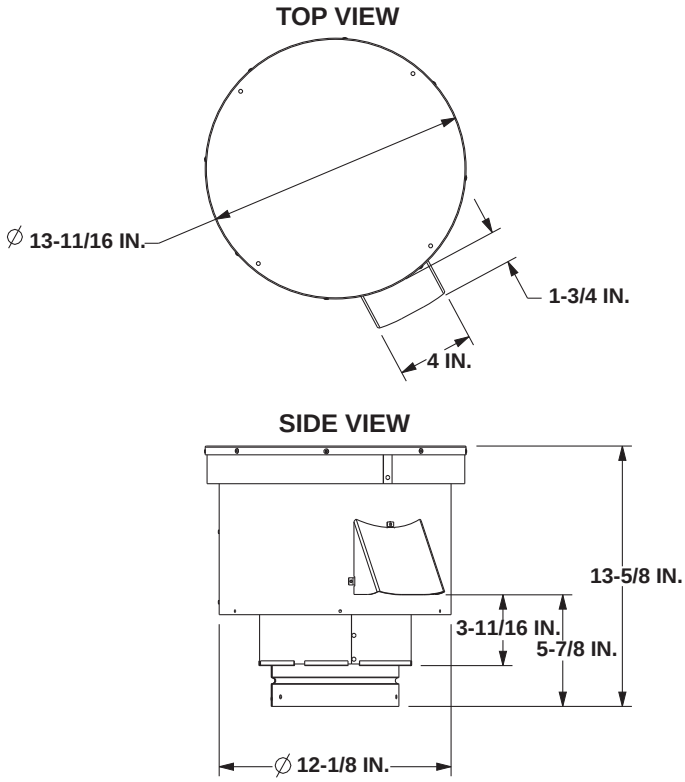

PVV-SLP
Vertical Power Vent

Required Wire Harness and PVV-SLEEVE	
Lengths Available	**Part Number**
10 ft. PV Wire Harness	PVI-WH10
20 ft. PV Wire Harness	PVI-WH20
40 ft. PV Wire Harness	PVI-WH40
60 ft. PV Wire Harness	PVI-WH60
80 ft. PV Wire Harness	PVI-WH80
100 ft. PV Wire Harness	PVI-WH100
Description	**Part Number**
12 in. Wire Harness Sleeve	PVV-SLEEVE-12
48 in. Wire Harness Sleeve	PVV-SLEEVE-48

Note: A wire harness is required to power the PVV-SLP and connect it to the appliance. It is ordered separately from the PVV-SLP. Contact your dealer to order.

Note: The PVV-SLEEVE-12 and/or PVV-SLEEVE-48 is required to be installed with the PVV-SLP. It is ordered separately from the PVV-SLP. Contact your dealer to order.

Note: The PVV-SLP requires one of the following options to be installed on this appliance.
Option A: IFT-RC400 and/or IFT-WFM, IFT-ACM and IntelliFire App that can be downloaded from the app store.
OR
Option B: IFT-RC150, IFT-ACM, IFT-WFM and an IntelliFire App that can be downloaded from the app store. These accessories are purchased separately from the PVV-SLP. Contact your dealer to order.

Figure 12.6 PVV-SLP Vent Components

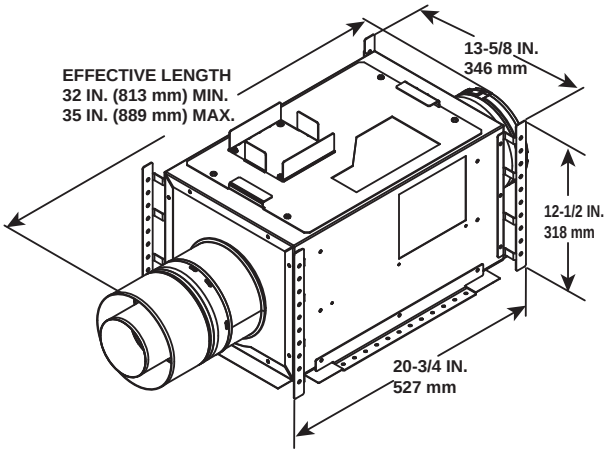

PVI-SLP-B
Power Vent Inline

Optional Wire Harness	
DESCRIPTION	**PART NUMBER**
10 FT PV Wire Harness	PVI-WH10
20 FT PV Wire Harness	PVI-WH20
40 FT PV Wire Harness	PVI-WH40
60 FT PV Wire Harness	PVI-WH60
80 FT PV Wire Harness	PVI-WH80
100 FT PV Wire Harness	PVI-WH100

Note: Wire harnesses required to power the PVI-SLP-B connect to the appliance and are ordered separately from PVI-SLP-B. Contact your dealer to order.

Note: Use only approved termination caps with the PVI-SLP-B.

Note: The PVI-SLP-B requires one of the following options to be installed on this appliance.
Option A: IFT-RC400 **OR**
Option B: IFT-RC150, IFT-ACM
These accessories are purchased separately from the PVI-SLP-B. Contact your dealer to order.

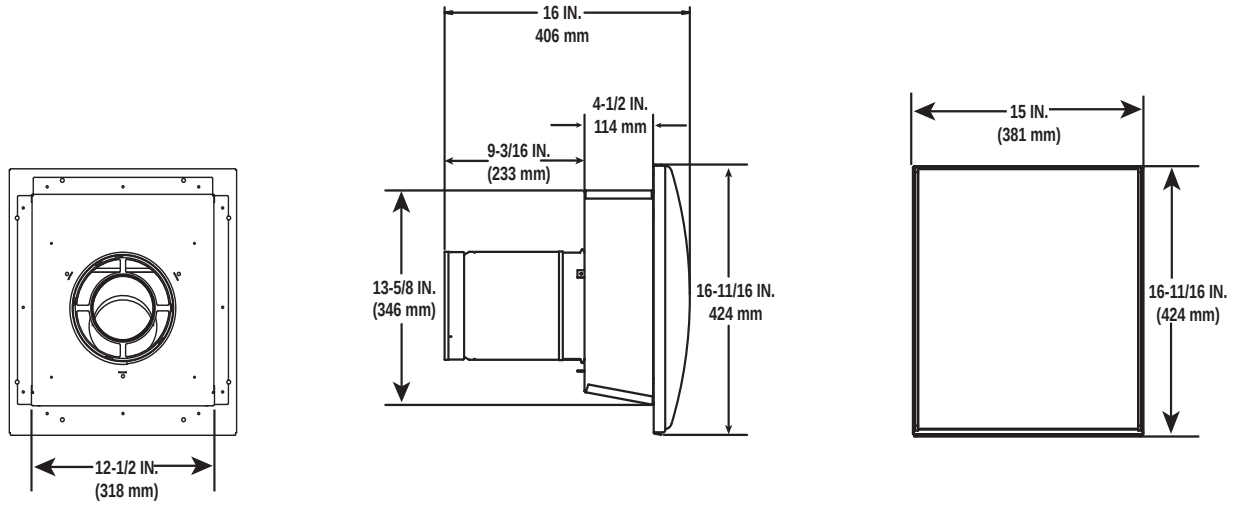

SLP-LPC
SLP Low Profile Cap

Figure 12.7 PVI-SLP-B Vent Components

A. Vent Components Diagrams *(continued)*

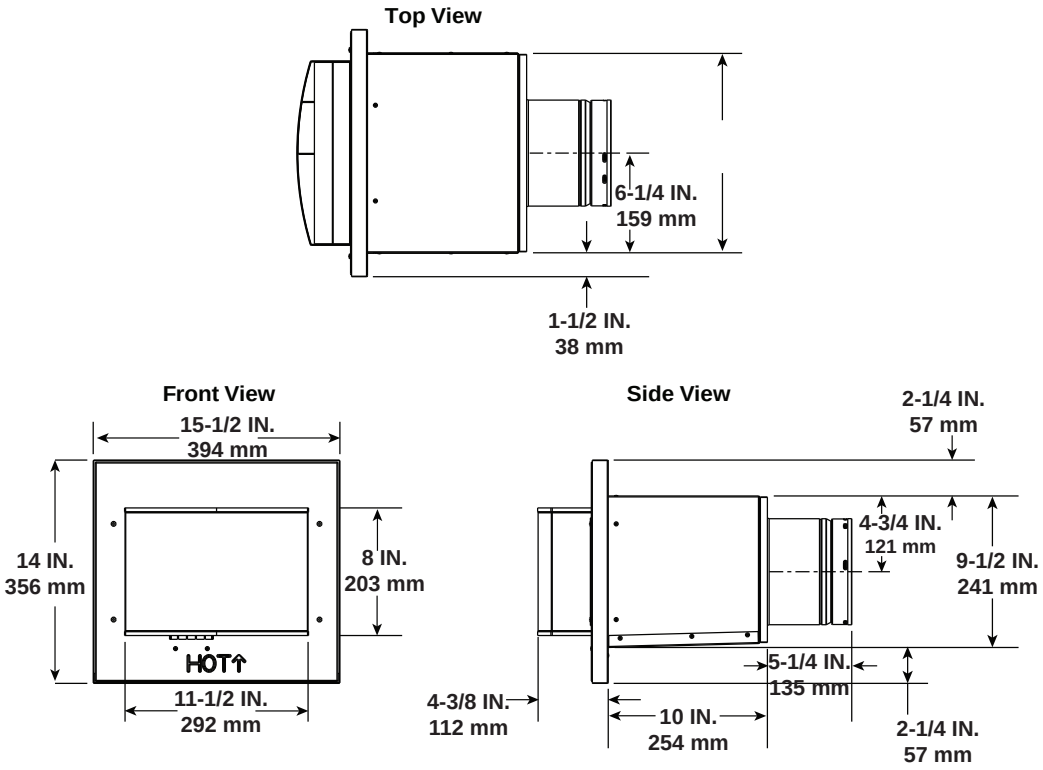

PVLP-SLP
Power Vent Low Profile

Note: Wire harnesses required to power the PVLP-SLP connect to the appliance and are ordered separately from PVLP-SLP. Contact your dealer to order.

Note: A PVLP-HS heat shield is available and sold separately. Use if the PVLP-SLP is installed in a high traffic area.

Note: The PVLP-SLP requires one of the following options to be installed on this appliance.
Option A: IFT-RC400 or Option B: IFT-RC150, IFT-ACM
Contact your dealer to order.

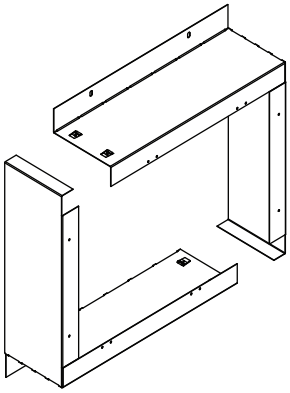

PVLP-BEK
Brick Kit

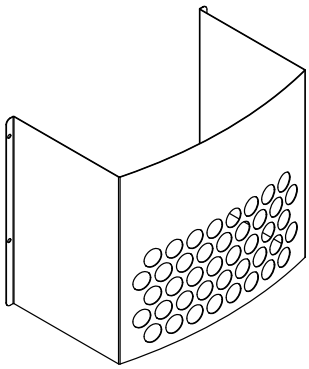

PVLP-HS
Heat Shield

Required Wire Harness	
DESCRIPTION	**PART NUMBER**
10 FT PV Wire Harness	PVI-WH10
20 FT PV Wire Harness	PVI-WH20
40 FT PV Wire Harness	PVI-WH40
60 FT PV Wire Harness	PVI-WH60
80 FT PV Wire Harness	PVI-WH80
100 FT PV Wire Harness	PVI-WH100

Figure 12.8 PVLP-SLP Vent Components

A. Vent Components Diagrams *(continued)*

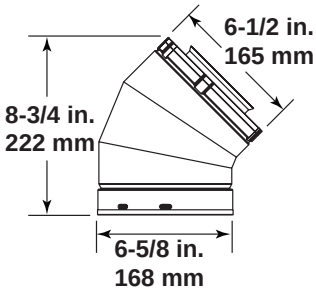

SLP45
45° Elbow

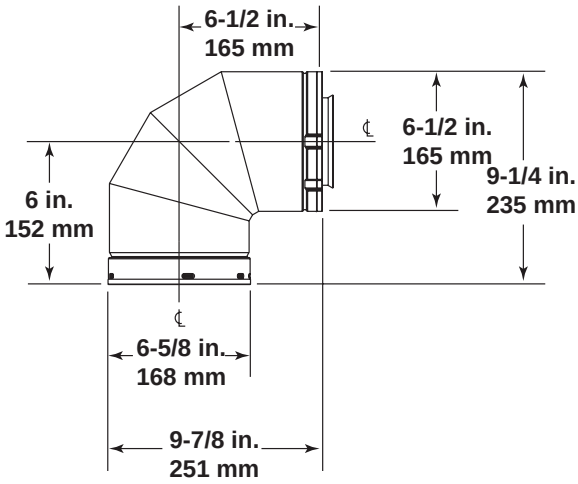

SLP90
90° Elbow

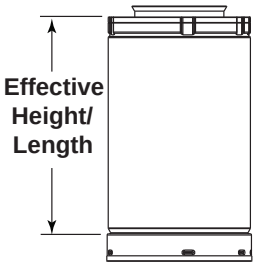

SLP PIPE

Effective Height/Length

Pipe	*inches*	*mm*
SLP4	4	102
SLP6	6	152
SLP12	12	305
SLP24	24	610
SLP36	36	914
SLP48	48	1219
SLP6A	2 - 6	51 - 152
SLP12A	2 - 12	51 - 305

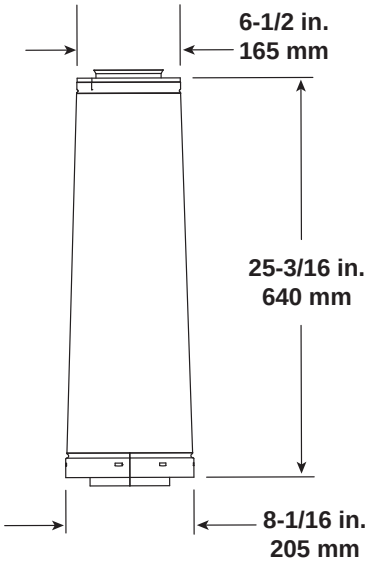

DVP-SLP24
Adapter

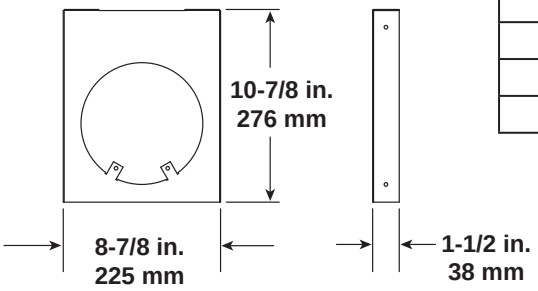

SLP-HVS
Horizontal Pipe
Support

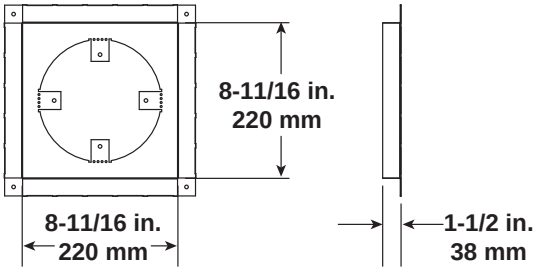

SLP-FS
Ceiling Firestop

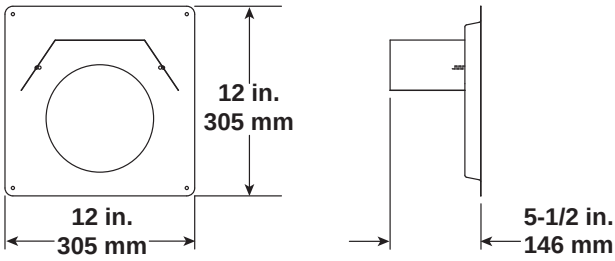

SLP-WS
Wall Shield Firestop

Figure 12.9 SLP Series Vent Components

A. Vent Components Diagrams *(continued)*

Note: Heat shields MUST overlap by a minimum of 1-1/2 in. (38 mm). The heat shield is designed to be used on a wall 4 in. to 7-1/4 in. (102 mm to 184 mm) thick. If wall thickness is less than 4 in. (102 mm) the existing heat shields must be field trimmed. If wall thickness is greater than 7-1/4 in. (184 mm) a DVP-HSM-B will be required.

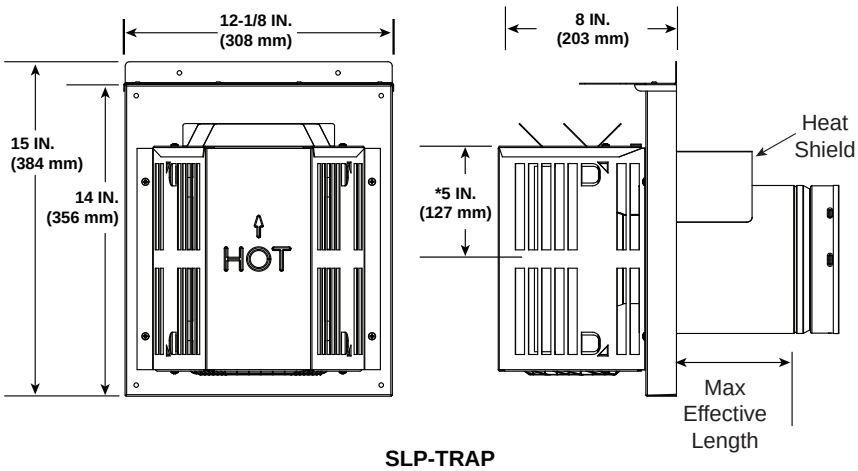

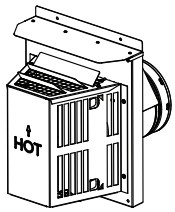

* Center of the horizontal vent pipe to the vertical measuring surface.

Term Cap	Minimum Effective Length	Maximum Effective Length
Trap1	3-1/8 in.	4-3/4 in.
	79 mm	121 mm
Trap2	5-1/4 in.	9-1/4 in.
	133 mm	235 mm

SLP-TRAP
Horizontal Termination Cap

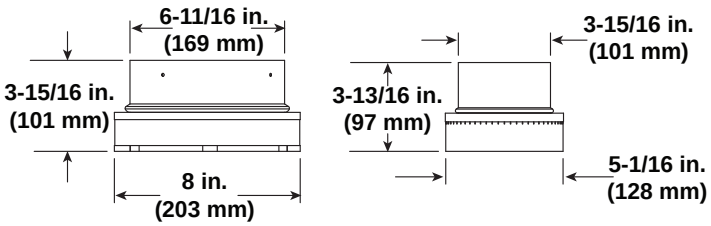

SL-2DVP
Adapter

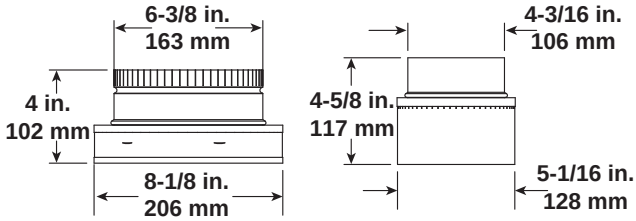

DVP-2SL
Adapter

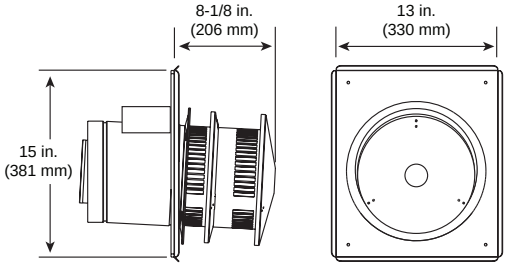

SLP-HRC-SS
Horizontal Termination Cap

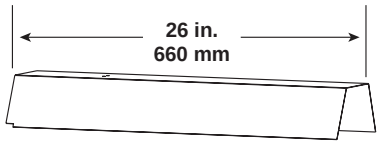

DVP-HSM-B
Extended Heat Shield

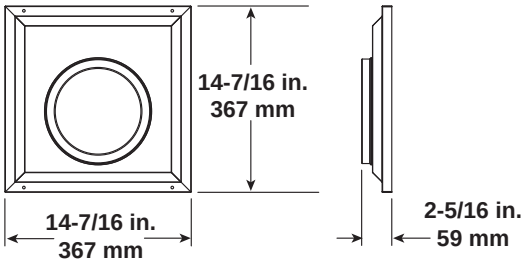

SLP-WT-BK
Wall Thimble-Black

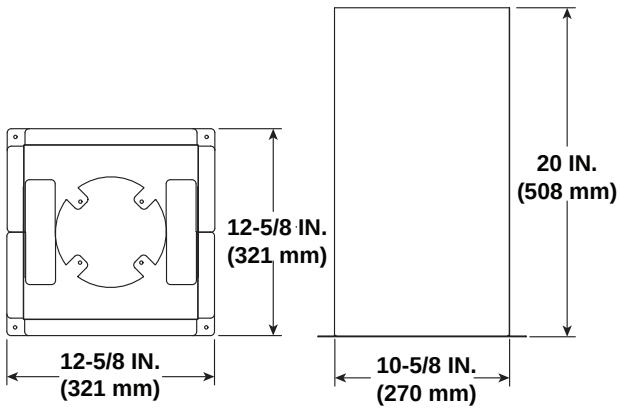

SLP-RDS
ROOF DECK INSULATION SHIELD

Figure 12.10 SLP Series Vent Components

A. Vent Components Diagrams *(continued)*

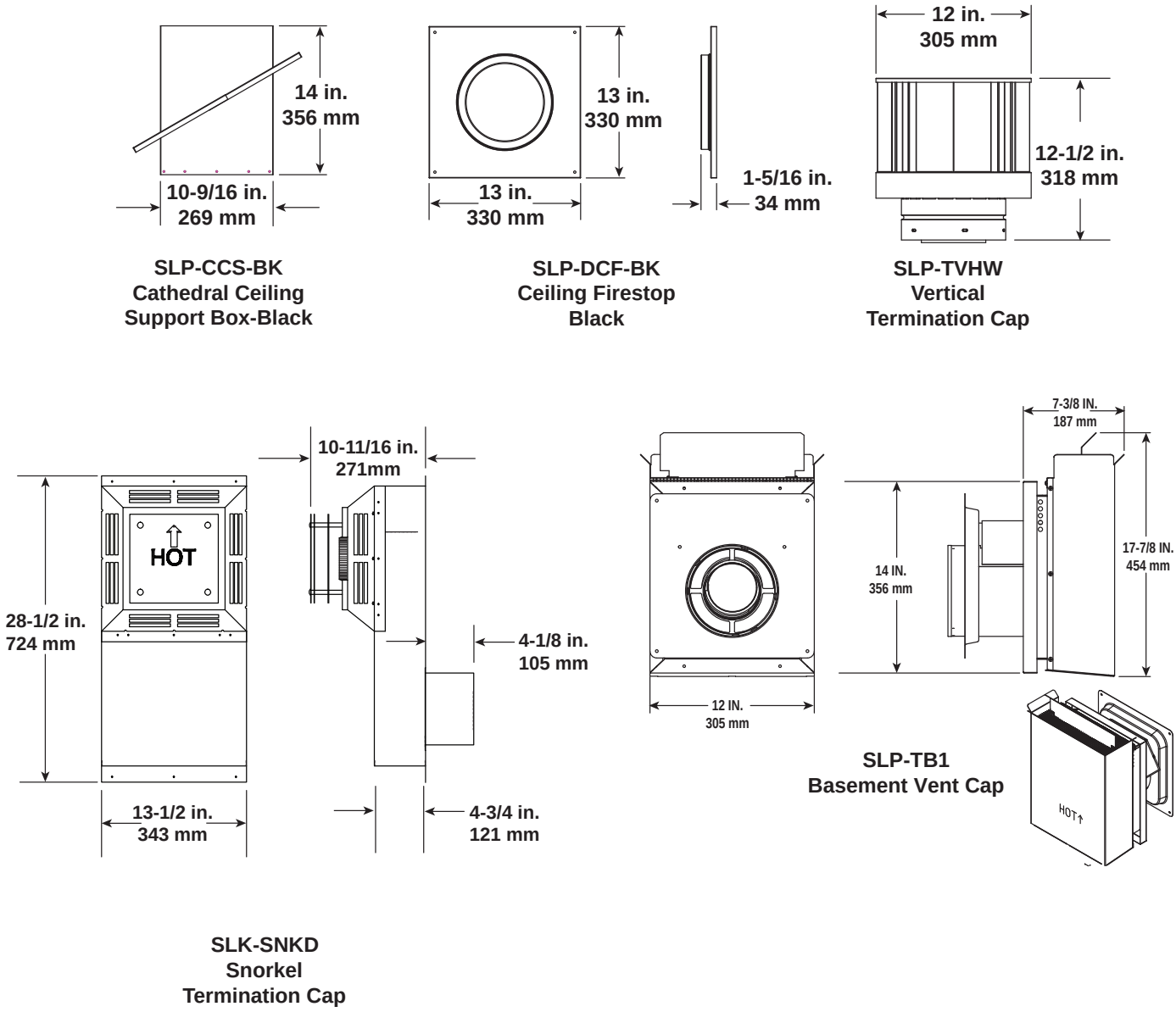

Figure 12.11 SLP Series Vent Components

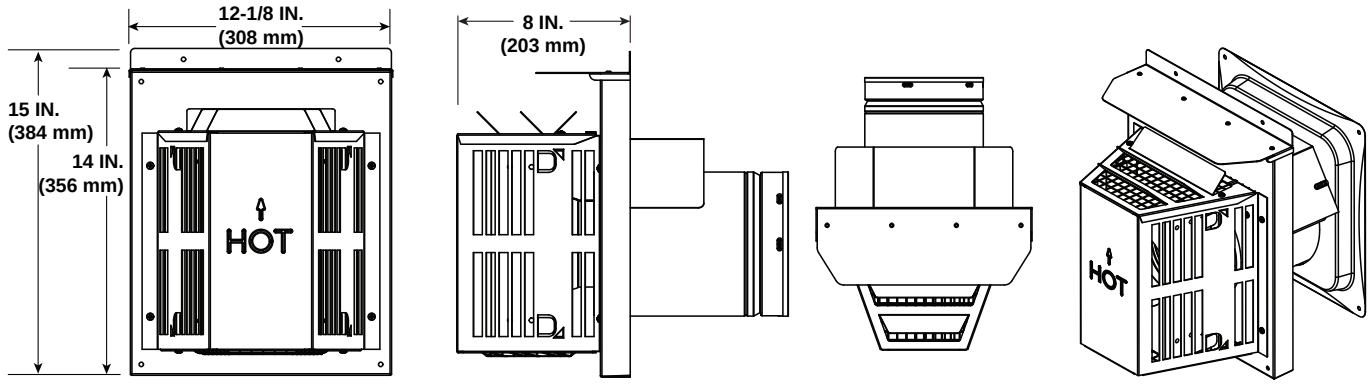

SLP-HHW2
Horizontal High Wind Termination Cap

Figure 12.13 SLP Series Vent Components

B. Accessories

Remote Controls, Wall Controls and Wall Switches

Follow the instructions supplied with the control installed to operate your fireplace:

For safety:

- Install a switch lock or a wall/remote control with child protection lockout feature.
- Keep remote controls out of reach of children.

See your dealer if you have questions.

Optional Fan

Follow the instructions supplied with the fan kit to operate your fan. See your dealer if you have questions.

Hearth & Home Technologies
7571 215th Street West, Lakeville, MN 55044
www.hearthnhome.com

Please contact your Hearth & Home Technologies dealer with any questions or concerns.
For the location of your nearest Hearth & Home Technologies dealer,
please visit www.hearthnhome.com.

Printed in U.S.A. - Copyright 2026