Service Parts

ECHEL48STIN-C

Beginning Manufacturing Date: Aug 2019
Ending Manufacturing Date: Active

Echelon 48” See Through Gas Fireplace - DV

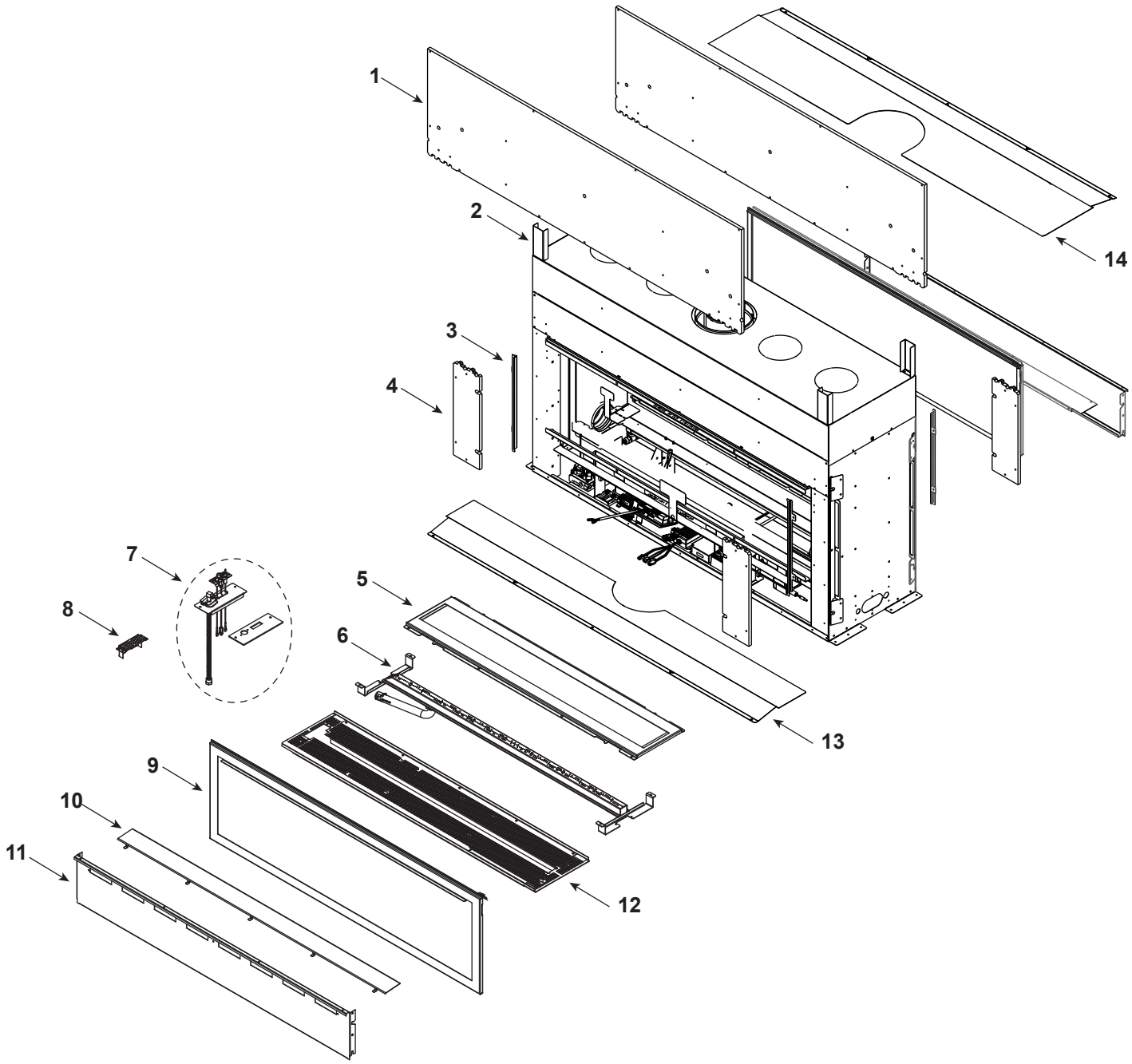

Part number list on following page.

Service Parts

ECHEL48STIN-C

Beginning Manufacturing Date: Aug 2019
Ending Manufacturing Date: Active

IMPORTANT: THIS IS DATED INFORMATION. Parts must be ordered from a dealer or distributor. **Hearth and Home Technologies does not sell directly to consumers.** Provide model number and serial number when requesting service parts from your dealer or distributor.

ITEM	DESCRIPTION	COMMENTS	PART NUMBER	Stocked at Depot
1	Non-combustible Board, Top	Qty 2 req	SRV2300-460	
2	Standoff, Top	Qty 4 req	2602-283	
3	Side Trim	Qty 4 req	2300-281	
4	Non-combustible Board, Side Pkg of 2	Qty 2 req	2300-461	
5	Bottom Glass		2300-018	
6	Burner		2408-007	**Y**
7	Pilot Assembly		**See Following Page**	
8	Shield, Pilot		2406-196	
9	Glass Assembly	Qty 2 req	GLA-48-MAJ	
10	Shield, Bottom Glass w/vent		2300-179	
	Shield, Bottom Glass		2301-179	
11	Panel, Bottom w/vent		2300-147	
	Panel, Bottom		2301-147	
12	Rock Tray		2409-059	
13	Heat Shield, Front		2603-150	
14	Heat Shield, Rear		2603-151	

#15 LED Light Assembly

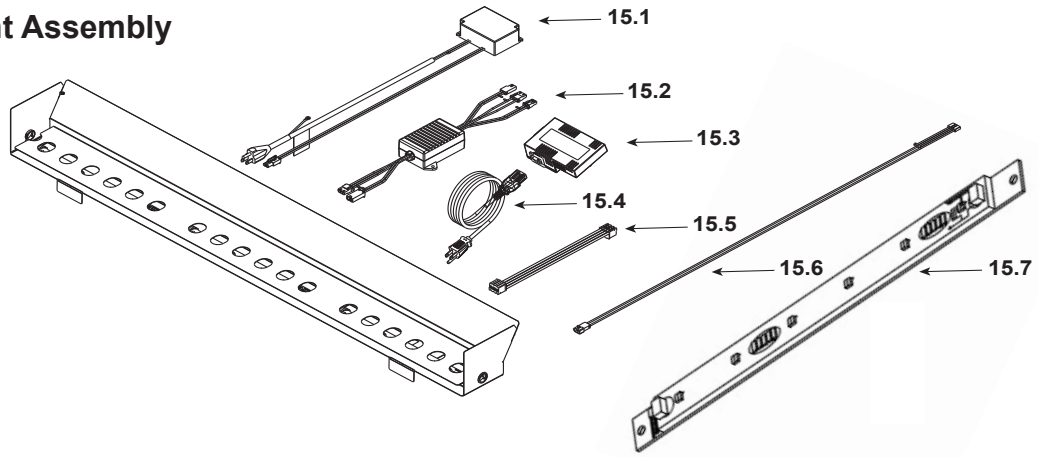

15	LED Light Assembly		ALK-48-C	
15.1	Power Supply, LED 40W		2326-113	**Y**
15.2	LED Dimmer		2326-112	**Y**
15.3	Module, B Type AC		SRV2326-150	**Y**
15.4	Cable, B Type AC Module		SRV2326-152	**Y**
15.5	LED Lightbar Connection		2300-753	**Y**
15.6	Cable, Linear LED		2300-754	**Y**
15.7	LED Board and Strip Assembly	Qty 3 req	SRV2300-062	**Y**

Additional service part numbers on following page.

Service Parts

ECHEL48STIN-C

Beginning Manufacturing Date: Aug 2019
Ending Manufacturing Date: Active

#7 Pilot Assembly

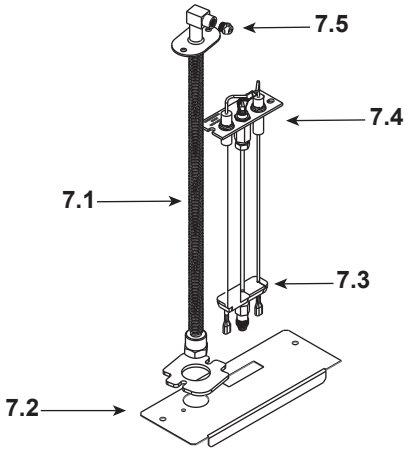

#16 Valve Assembly

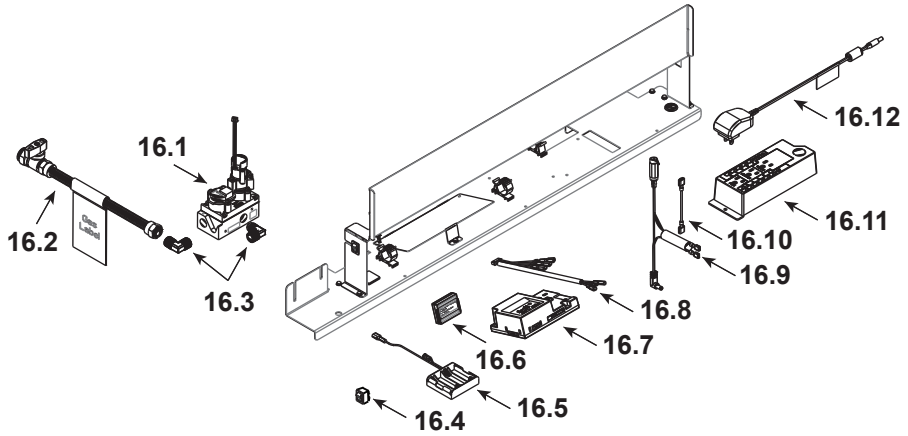

IMPORTANT: THIS IS DATED INFORMATION. Parts must be ordered from a dealer or distributor. **Hearth and Home Technologies does not sell directly to consumers.** Provide model number and serial number when requesting service parts from your dealer or distributor.

ITEM	DESCRIPTION	COMMENTS	PART NUMBER	Stocked at Depot
7.1	Bulkhead w/Flex tube		SRV2166-119	Y
7.2	Plate, Flex and Pilot		2300-163	
7.3	3-Hole Grommet		SRV2118-420	
7.4	Pilot Assembly, NG		2406-012	Y
	Pilot Assembly, Propane	Convert 2406-012 with SRV593-527		Y
7.5	Orifice, NG #.124		582-8124	Y
	Orifice, Propane #50C		582-850	Y
16.1	Valve, NG		SRV2166-302	Y
	Valve, Propane		2166-303	Y
16.2	Flex Ball Valve Assembly		SRV2078-022	Y
16.3	Elbow	Qty 2 req	SRV4021-045	
16.4	Reset Switch	Propane Only	SRV2206-298	Y
16.5	Battery Pack**		SRV2326-134	Y
16.6	Module, RF		SRV2326-120	Y
16.7	Module, IFT Control		SRV2326-130	Y
16.8	Wire Harness		SRV2326-132	Y
16.9	Reset Switch Wire	Propane Only	SRV2326-135	Y
16.10	Jumper Wire, 2.5 inch		SRV2155-033	Y
16.11	Junction Box	Pre LC6668884	SRV4021-013	Y
		Post LC6668884	SRV2326-013	Y
16.12	Transformer, 6 Volt Wall		SRV2326-131	Y
	Component Insulation		2604-102	Y

**Fuse for battery pack can be sourced locally, not a warranty item. Specs are 250v, 3A fuse, 3/4” long

Additional service part numbers on following page.

Service Parts

ECHEL48STIN-C

Beginning Manufacturing Date: Aug 2019
Ending Manufacturing Date: Active

IMPORTANT: THIS IS DATED INFORMATION. Parts must be ordered from a dealer or distributor. **Hearth and Home Technologies does not sell directly to consumers.** Provide model number and serial number when requesting service parts from your dealer or distributor.

ITEM	DESCRIPTION	COMMENTS	PART NUMBER	Stocked at Depot
	Flue Restrictor		385-128	
	Fiber Glass Rope		060-455	
	Gasket Assembly Contains:Vent, Burner Neck, Seal Cap, Air Passage, Drawn Air Passage, and Flex and Pilot		2300-080	
	Glass Latch Assembly	Qty 8 req	2146-413	**Y**
	Heat Zone Collar Cover Plate		2310-107	
	Insulation Donut, Plug		2065-121	
	Log Assembly (Optional)		LOGS-DRTWOOD-48	
	Light Kit, Ambient		ALK-48-C	
	Black Glass Kit (Includes Manual Bag Assembly for kit and Refractory Assembly, Optional)		BGK- LINEARST	
	Back Retaining Clips	Pkg of 25	060-235-25	
	Side Retaining Clip	1 Per Side	2406-104	
	RC 400 Remote		SRV2326-110	**Y**
	Touch Up Paint		TUP-GBK-12	
	Vinyl Siding Shield		TRAP-VSS	
Media Options				
	Media Kit, Bronze	4 Bags Max	GLASS-BZ	
	Media Kit, Onyx	4 Bags Max	GLASS-OY	
	Media Kit, Saphire	4 Bags Max	GLASS-SP	
	Media Kit, Diamond	4 Bags Max	GLASS-DM	
	Stones	3 Bags Max	STONES-NATURAL	
Conversion Kits				
	Conversion Kit NG		N/A	
	Conversion Kit Propane		LPK-ECHEL48	**Y**
	Pilot Orifice, NG		SRV593-528	**Y**
	Pilot Orifice, Propane		SRV593-527	**Y**
	Regulator, NG		NGK-DXV-50	**Y**
	Regulator, Propane		SRVLPK-DXV-50	**Y**