Service Parts

WARMMAJIC-D

Woodburning Fireplace

Beginning Manufacturing Date: Jan 2025
Ending Manufacturing Date: Active

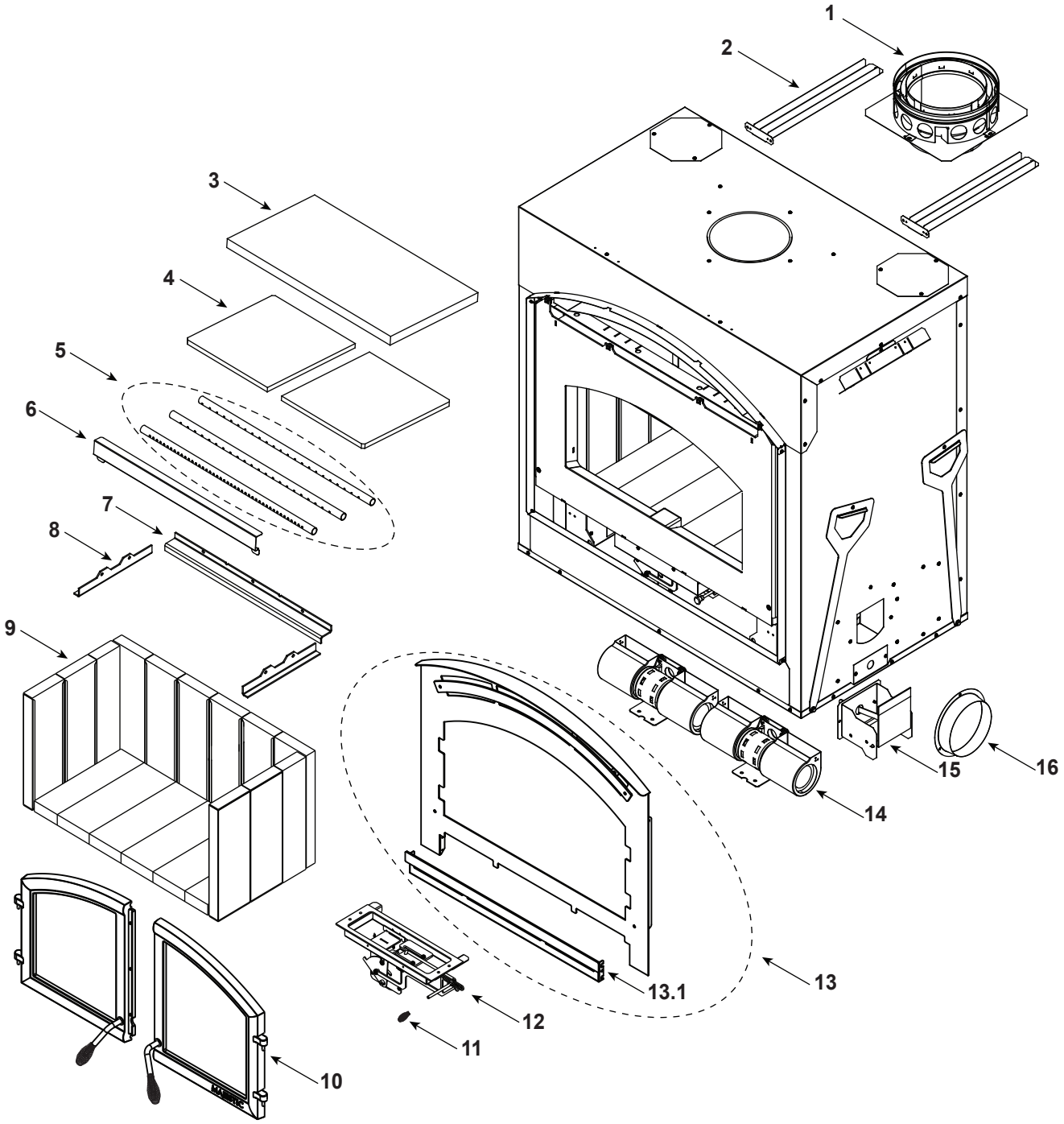

Part number list on following page.

Service Parts

WARMMAJIC-D

Beginning Manufacturing Date: Jan 2025
Ending Manufacturing Date: Active

IMPORTANT: THIS IS DATED INFORMATION. Parts must be ordered from a dealer or distributor. **Hearth and Home Technologies does not sell directly to consumers**. Provide model number and serial number when requesting service parts from your dealer or distributor.

ITEM	DESCRIPTION	COMMENTS	PART NUMBER	Stocked at Depot
1	Starter Plate Assembly		SL1	
	Starter Section		SRV22069	**Y**
2	Standoff, Front	Qty 2 req	SRV4182-233	
3	Baffle Blanket		SRV4184-205	
4	Baffle	Qty 2 req	SRV4184-113	
5	Manifold Tube Set		TUBES-4184	**Y**
6	Baffle Protector		SRV4184-195	
7	Brick Retainer, Back		SRV4184-123	
8	Brick Retainer, Side	Qty 2 req	SRV4184-121	

#9 Brick Set

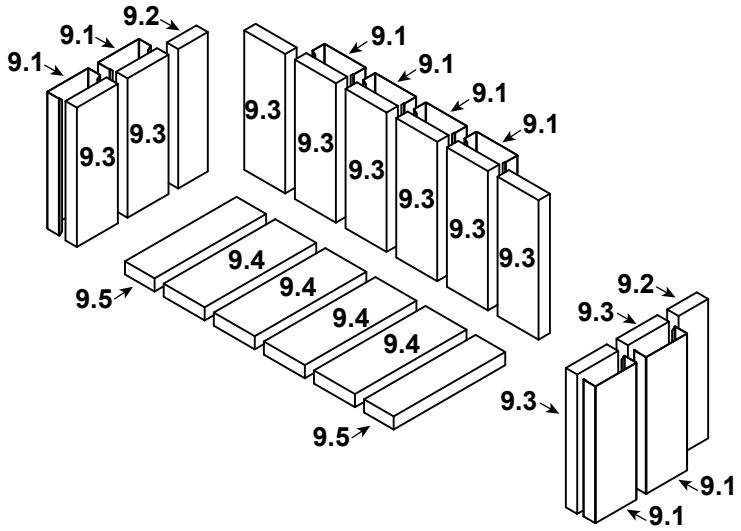

9	Brick Assembly		SRV4184-016	**Y**
9.1	Brick Wrap	Qty 8 req	SRV4182-101	
9.2	Firebrick, 13.25 x 3.25	Qty 2 req	SRV4182-203	
9.3	Firebrick, 13.25 x 4.5 x 1.25	Qty 10 req	SRV4182-301	
9.4	Firebrick, 12.25 x 4.5	Qty 4 req	SRV4184-201	
9.5	Firebrick, 12.25 x 3.25	Qty 2 req	SRV4184-203	
10	Door Assembly		**See following pages**	
11	Handle, Spring 1/4 Black		SRV7000-614	**Y**
12	Timer Assembly		**See following pages**	
13	Front Assembly (Complete)		SRV4188-070	
13.1	Front Access Grille Assembly		SRV4188-076	
14	Blower Assembly	Qty 2 req	SRV433-5890	**Y**
	Fan Speed Control		SRV7000-143	
	Wire Harness		SRV480-0990	**Y**
	Snap Disc, F180F-30		SRV4021-827	

Additional service part numbers on following page.

Service Parts

WARMMAJIC-D

Beginning Manufacturing Date: Jan 2025
Ending Manufacturing Date: Active

IMPORTANT: THIS IS DATED INFORMATION. Parts must be ordered from a dealer or distributor. **Hearth and Home Technologies does not sell directly to consumers**. Provide model number and serial number when requesting service parts from your dealer or distributor.

ITEM	DESCRIPTION	COMMENTS	PART NUMBER	Stocked at Depot
15	Outside Air Assembly		SRV4184-039	
16	Unit Collar		SRV4087-314	

#10 Door Assembly

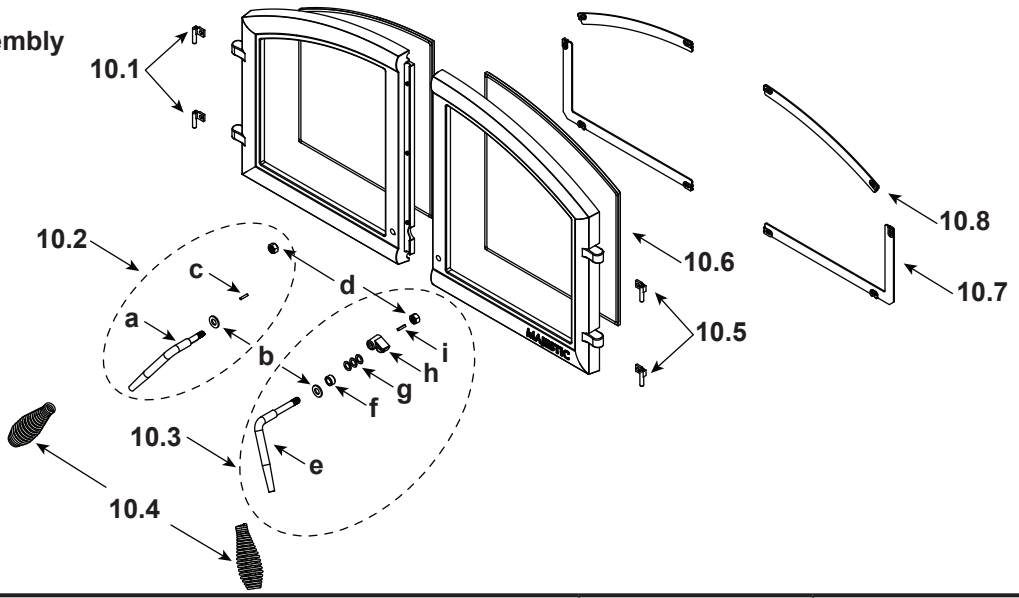

10	Door Assembly		SRV4188-030	
10.1	Door Hing Pin, Left (Pkg of 4)	Qty 2 req	480-2120/4	**Y**
10.2	Door Handle Assembly, Left		SRV4180-052	
10.3	Door Handle Assembly, Right		SRV4180-051	
a	Door Handle, Left		SRV480-0530	
b	Washer, 3/8 SAE Black	Qty 2 req	832-0990	**Y**
c	Pin, 1/8 x 5/8 Dowel		SRV7000-163	
d	Nut, 3/8-16 Lock (Pkg of 24)	Qty 2 req	226-0100/24	**Y**
e	Door Handle, Right		SRV480-0520	
f	Bushing, SLP15		20666A/5	**Y**
g	Washer, 3/8 MIL SS	Qty 3 req	7000-116/10	**Y**
h	Cam Latch		SRV4188-200	
i	Latch, Key Cam		SRV430-1151	
	Door Gasketing, 1/2 in. (Right 49.63”/Left 60.88”)		SRV433DRGASKET	**Y**
	Gasket, Lytherm, 1/2” x 1/8”	7 Ft	834-2590	
10.4	Spring Handle, 1/2 Black	Qty 2 req	SRV7000-613	**Y**
10.5	Door Hing Pin, Right (Pkg of 4)	Qty 2 req	480-2110/4	**Y**
10.6	Glass Assembly	Qty 2 req	SRV480-5430	**Y**
	Gasket, 10 Ft Rope		834-4170	**Y**
10.7	Glass Frame Bottom	Pkg of 2	SRV480-1450	
10.8	Glass Frame Top	Qty 2 req	SRV480-1440	

Additional service part numbers on following page.

Service Parts

WARMMAJIC-D

Beginning Manufacturing Date: Jan 2025
Ending Manufacturing Date: Active

IMPORTANT: THIS IS DATED INFORMATION. Parts must be ordered from a dealer or distributor. **Hearth and Home Technologies does not sell directly to consumers**. Provide model number and serial number when requesting service parts from your dealer or distributor.

#12 Timer Assembly

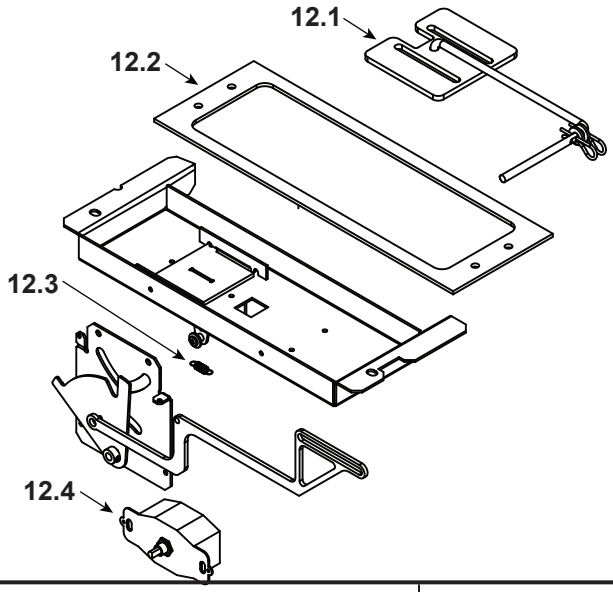

ITEM	DESCRIPTION	COMMENTS	PART NUMBER	Stocked at Depot
12	Timer Assembly (Complete)		SRV4184-054	
12.1	Slide Assembly		SRV4184-041	
12.2	Air Channel Gasket		SRV4184-189	Y
12.3	Extension Spring		SRV433-3950	
12.4	Timer Mechanical, 12 Hour		SRV480-1940	Y
	Combustion Cover Gasket		SRV4184-359	
	Outside Air Hood Assembly		SRV4059-271	
	Chimney Air Kit		CAK4A	
	Fastener Pack, Chimney Air Kit		13580	
	Face Board Assembly, Non-combustible board		SRV4184-064	
	Hearth Strip		SRV18320	
	Template		HHT-TEMPLATE-C	
	Touch Up Paint	Black	812-0910	
	Fastener Packs			
	AVK Repair Kit 1/4-20		RIVNUT-REPAIR	Y
	Nut, 1/4-20	Pkg of 4	SRV221-0110	
	Screw, HWH MS 1/4-20 x 3/4	Pkg of 25	220-0080/25	Y
	Screw, PH 8-32 x 1/2	Pkg of 25	220-0030/25	Y
	Washer, 1/4 SAE (for door)	Pkg of 24	28758/24	Y