Installation Instructions

Gas Fireplace Insert Heater Listed Certified for USA. and Canada

Intertek
C#4000720

Model Numbers:
IDV24 - Stock Numbers: IDV24N, IDV24NE, IDV24NE2, IDV24LP, IDV24LPE, IDV24LPE2

Minimum Fireplace Opening Required: 24-1/4"W x 18-1/2"H x 14"D

Are Certified to: CSA/ANSI Z21.88:19 • CSA 2.33:19 and CSA2.17-2017
VENTED GAS FIREPLACE HEATERS

marquis FIREPLACE COLLECTION
CAPRI

⚠ WARNING:
FIRE OR EXPLOSION HAZARD
Failure to follow safety warnings exactly could result in serious injury, death, or property damage.

- **Do not store or use gasoline or other flammable vapors and liquids in the vicinity of this or any other appliance.**
- **WHAT TO DO IF YOU SMELL GAS**
  - **Do not try to light any appliance.**
  - **Do not touch any electrical switch; do not use any phone in your building.**
  - **Leave the building immediately.**
  - **Immediately call your gas supplier from a neighbor's phone. Follow the gas supplier's instructions.**
  - **If you cannot reach your gas supplier, call the fire department.**
- **Installation and service must be performed by a qualified installer, service agency or the gas supplier.**

This appliance may be installed in an aftermarket, permanently located, manufactured home (USA only) or mobile home, where not prohibited by local codes.

This appliance is only for use with the type of gas indicated on the rating plate. This appliance is not convertible for use with other gases, unless a certified kit is used.

⚠WARNING: The IDV24 Fireplace Insert was designed for installation in a solid fuel fireplace that has been installed in accordance with national, provincial / state and local building codes and is constructed of noncombustible materials. Do not remove any refractory materials from any masonry solid fuel fireplace.
The IDV24 Fireplace Insert was designed for installation in a zero-clearance type listed solid fuel burning factory-built fireplace. It may be necessary to remove the damper plate, refractory liners, log grates, glass door, and screen rails/mesh. Removal of the smoke baffle is necessary in most cases.

INSTALLER: Leave this manual with the appliance.
CONSUMER: Retain this manual for future reference.

VENTED GAS FIREPLACE HEATER:
NOT FOR USE WITH SOLID FUEL.

Kingsman Fireplaces maintains a program of continuous testing, refinement and improvements of all its products. Some aspect of units shown here may be changed at any time without notice or obligation.

⚠ DANGER

HOT GLASS WILL CAUSE BURNS.

DO NOT TOUCH GLASS UNTIL COOLED.

NEVER ALLOW CHILDREN TO TOUCH GLASS.

A barrier designed to reduce the risk of burns from the hot viewing glass is provided with this appliance and must be installed for the protection of children and other at-risk individuals.

If the barrier becomes damaged, the barrier must be replaced with the manufacturer's barrier for this appliance.

KINGSMAN FIREPLACES Est. 1976

A Division of R-Co. Inc.
2340 Logan Avenue
Winnipeg, Manitoba, Canada R2R 2V3
Ph: (204) 632-1962
Printed in Canada September 3, 2026
Part # 24IDV-MAN19

Important Information

INSTALLATIONS

- The following label (supplied with the gas fireplace insert) must be attached with rivets or screws to the inside of the firebox of the fireplace into which it is installed:
- Cutting any sheet-metal parts of the fireplace, in which the gas fireplace insert is to be installed, is prohibited.
- If the factory-built fireplace has no gas access hole(s) provided, an access hole of 1.5 in (37.5 mm) or less may be drilled through the lower sides or bottom of the firebox in a proper workmanship like manner. This access hole must be plugged with non-combustible insulation after the gas supply line has been installed.
- The fireplace flue damper can be fully blocked open or removed for installation of the gas fireplace insert.
- Ensure that existing chimney cleanouts fit properly.
- refractory, glass doors, screen rails, screen mesh and log grates can be removed from the fireplace before installing the gas fireplace insert.
- Smoke shelves, shields and baffles may be removed if attached by mechanical fasteners.
- Trim panels or surrounds must not seal ventilation openings in the fireplace.
- The fireplace and fireplace chimney must be clean and in good working order and constructed of non-combustible materials.

WARNING: THIS FIREPLACE HAS BEEN CONVERTED FOR USE WITH A GAS FIREPLACE OR INSERT ONLY AND CANNOT BE USED FOR BURNING WOOD OR SOLID FUELS UNLESS ALL ORIGINAL PARTS HAVE BEEN REPLACED AND THE FIREPLACE RE-APPROVED BY THE AUTHORITY HAVING JURISDICTION (PLEASE APPLY THIS TO THE FIREPLACE THAT THE INSERT IS BEING INSTALLED INTO).

ADVERTISSEMENT : CETTE CHEMINÉE A ÉTÉ CONVERTIE UNIQUEMENT POUR ÊTRE UTILISÉE AVEC UN ENCASTREMENT POUR CHEMINÉE AU GAZ NE PEUT PAS ÊTRE UTILISÉE POUR BRÜLEUR DU BOIS OU DES COMBUSTIBLES SOLIDES À MOINS QUE TOUTES LES PIÈCES D'ORIGINE AIENT ÉTÉ REMPLACÉES QUE LA CHEMINÉE AIT ÉTÉ RÉAPPROUVÉE PAR LES AUTORITÉS AYANT JURIDICTION (APPLIQUEZ CELA SVP À LA CHEMINÉE DONT L'ENCASTREMENT EST EN TRAIN D'Y ÊTRE INSTALLÉE).

MAINTENANCE

- If for any reason the vent air intake system is disassembled, re-install and re-seal per the instructions provided for the initial installation. See "Installation of Vent Pipe" section.
- It is recommended to annually inspect and clean the Burner System to prevent malfunction and / or sooting. This operation should be performed by your dealer or a qualified technician. Refer to Burner System Maintenance section.
- Venting systems should be periodically examined by a qualified agency.
- Periodically remove the logs from the grate assembly and vacuum any loose particles from the grate and burner areas. See Log Placement page to remove logs. Vacuum burner parts and replace logs.

-Glass Safety- All Units

IT IS THE RESPONSIBILITY OF THE HOME OWNER TO ENSURE THAT NO ONE TOUCHES A HOT APPLIANCE.

If the barrier becomes damaged, the barrier shall be replaced with the manufacturer's barrier for this appliance.

Any safety screen, guard, or barrier removed for servicing the appliance, must be replaced prior to operating the appliance.

- Children and adults should be alerted to the hazards of the high surface temperatures of this appliance and should stay away to avoid burns or ignition of clothing.
- Do not clean when the glass is hot.
- Young children should be carefully supervised when they are in the same room as the appliance. Toddlers, young children, and others may be susceptible to accidental contact burns.
- A physical barrier is recommended if there are at risk individuals in the house. To restrict access to a fireplace or stove, install an adjustable safety gate to keep toddlers, young children and other at-risk individuals out of the room and away from hot surfaces.
- Do not leave the fireplace remote control where it is accessible to children.

24IDV - Table of Contents

Important Information / Glass Safety…… 2
Table of Contents…… 3-4
Safety Screen Installation…….. 5
Pre-installation Questions and Answers..... 6
Operations and Maintenance Instructions..... 6
Warnings, Installations and Operations..... 7
Installation Requirements for the Commonwealth of Massachusetts..... 8
Carbon Monoxide (CO) Detector…….. 8
Mobile Home/Manufactured Housing Installation..... 9
IDV24 Fireplace Openings …….. 10
IDV24 Fireplace Dimensions……. 10
IDV24 Clean Views and Surround Options..... 11
I24SU4541 -Universal Surround- IDV24…… 12
IDV24 Mantel Heights..... 13
Wall Coverings, Side Walls, and Hearth Requirements..... 14
Using Steel Studs and Concrete Board..... 14
Leveling Instructions……..... 15
IDV24 - Riser Kit Installation Instructions – Model No.: I34R40…….. 15
Surround Installations..... 16
Clean View Attachment..... 17

Media and Accessories

I33CS Mantel Clearance Shield Instructions…….. 18
IDV24RLT Brick Liner Panels..... 19
LOGF24DW Driftwood Log Setup…… 20
LOGF24OAK Oak Log Setup…… 20
Crushed Glass and Media Options…….. 21
MQROCK2, MQROCK3……. 22
MQSTONE 22
MQ EMBER Installation..... 23
RBCB1 Cannonballs…….. 23

Maintenance

Fan Removal / Installation..... 24
Halogen Lights- P2 Models Only- Up to SN#1807…….. 25
Halogen Lights- P2 Models Only- SN#1808 and Above…….. 26
Glass Door Information / Door Installation and Removal..... 27

Gas Section

Burner Removal / Burner System Removal / Installation..... 28
Burner System Maintenance..... 29
Conversion Kit Instructions – Part A..... 30
Gas Conversion for SIT Top Convertible Pilot – Part B..... 31
Gas Conversion for SIT Modulator – PART C..... 32
Gas Line Installation / Gas Specifications…….. 33
Millivolt System, Lighting, and Burner Control..... 34
Lighting Instructions for Millivolt Valve with 7 Day Timer…….. 35
IPI Lighting Instructions…….. 36
Annual Inspection List for Determining Safe Operation of a Direct Vent Gas Fireplace……. 37
Troubleshooting the Gas Control System..... 38

Proflame 1 IPI

Overview / Components..... 39
Junction Box Location..... 40
IPI Proflame 1 -Remote Control Operation……. 41

IPI Electronic Ignition Parts List – Standard System..... 42
Configuration1 / Configuration 2..... 43
Operating the Receiver Without Batteries for GT / EGT / GTM / EGTM Remote Controls..... 44

Proflame 2 IPI

Proflame 2- Parts List..... 45
Proflame 2 IFC Module and Remote Control..... 46
Cold Climates – CPI Setting..... 47
Proflame 2 Remote Control Operation..... 48-49
Proflame 2 Schematic..... 50
WMBH – Wall Mount Battery Holder – Proflame 1 and 2 IPI Models..... 51

Venting

IDV24 Venting Installation..... 52
IDV24 Vent Pipe Installation..... 53
Insulation of Chimney Cavity..... 54
IDVVT32-KIT 2/3 Venting Adapter Kit..... 55

Parts List

IDV24 Parts List..... 56-57

Limited Lifetime Warranty..... 58

Safety Screen Installation - IDV24 I24CSS

SAFETY SCREENS ARE SUPPLIED IN I24CV1BL Kits

⚠WARNING: Wait until unit is COMPLETELY cool before touching glass or attempting to install or remove Child Safety Screens.

To Install Screen: Insert Hooks on Safety Screen into Slots in Glass Door Frame.

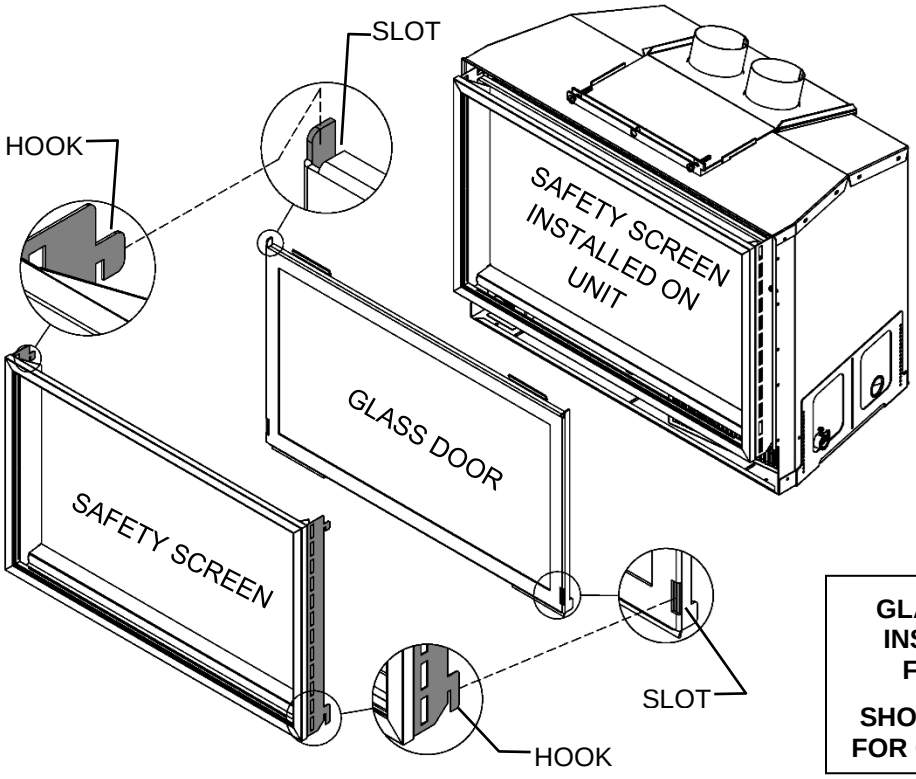

GLASS DOOR IS INSTALLED ON FIREPLACE.

SHOWN REMOVED FOR CLARITY ONLY

Procedure:

1: Engage Lower Hooks in Slots.

2: Raise Screen. Ensure that Lower Hooks remain engaged. Top Hook is directly above Slot.

3: Lower Screen. Watch both sides to ensure that Top Hooks engage properly.

To remove Safety Screens

WAIT UNTIL FIREPLACE IS COMPLETELY COOL.

Lift up on Safety Screen Frame and disengage Hooks in Safety Screen from Slots in Glass Door Frame.

Pre-installation Questions and Answers

About curing of the paint
Your stove or fireplace has been painted with the highest quality silicone stove paint. This paint dries quickly in 15-20 minutes when first applied at the factory. However, due to the high temperature silicone components, the paint will cure when heat is applied to the appliance as it is first used. The following information applies to the curing process to get the paint fully hard and durable. **Note: Use of painter's tape is not recommended, as it may damage the paint.**

Fire the appliance four successive times for 10 minutes each firing and a 5 minute cool down between each. Be aware during log and firebox paint curing that a white deposit may be developing on the inside of the glass doors. It is important to remove this white deposit from the glass doors using a fireplace glass cleaner.

- Babies, small children, pregnant women and pets should leave the area during the cure phase.
- Ventilate well, open doors and windows.
- Do not touch during curing.

Why does my fireplace or stove give off odor?

It is normal for your fireplace to give off some odor at first. This is due to the curing of the paint, adhesives, silicones and any undetected oil from the manufacturing process as well as the finishing materials used with the installations (e.g. marble, tile and the adhesives used to adhere this product to the walls can react with heat and cause odors).

It is recommended that you burn your gas fireplace or stove for a minimum of four hours at a time with the fan off (if a fan is present) after the curing of the paint has been completed. These odors can last upward to 40 hours of burn time; keep burning at a minimum of four hours per use until odors dissipate.

Noise coming from the fireplace?

Noise is caused by the expansion and contraction of metal as the appliance heats up and cools down. This is normal and is similar to the sounds produced by a furnace or heating duct. This noise does not affect the operation or longevity of your fireplace.
It is also normal for the fan to make some noise when it comes on. This noise can be reduced somewhat by turning down the speed of the fan with the variable speed control. Be aware, however, that this will reduce the volume of heated air circulated into the room by the fan.

Note to the Installer:
Be sure appliance is working properly and its operation (including remote control operation, if included) is fully explained to and understood by the customer.

Operations and Maintenance Instructions

For safe installation and operation note the following:

- Be sure to read and understand all the instructions in this manual before operation of appliance.
- Ensure all wiring is correct and properly enclosed to prevent possible shock.
- Check for gas leaks.
- Make sure the glass door is properly installed before operation. Never operate the appliance with the glass door removed.
- Make sure venting and termination cap are installed and unobstructed.
- If brick or porcelain liners are used, ensure they are installed.
- Verify that the pilot can be seen when lighting the appliance. If not, the log or rock placement is incorrect.
- If the unit is turned off, you must wait a minimum of 60 seconds before re-lighting it.
- Venting systems should be periodically examined by a qualified agency.
- The flow of combustion and ventilation air must not be obstructed.
- The Burner/Log Assembly has been engineered and permanently adjusted for proper flame control.
- Periodically remove the logs from the grate assembly and vacuum any loose particles from the grate and burner areas. See Log Placement page to remove logs. Vacuum burner parts and replace logs.
- Never use your gas fireplace as a cooking device.
- Label all wires prior to disconnection when servicing controls. Wiring errors can cause improper and dangerous operation. Verify proper operation after servicing.
- Areas in and around the Chase Vent Openings should be cleaned annually.

Warnings, Installations and Operations - Installation Regulations

This gas appliance must be installed by a qualified installer in accordance with local building codes, or in the absence of local codes, with the current CAN/CSA-B149.1 or .2 Installation Code (in Canada) or the current National Fuel Gas Code Z223.1- NFPA 54 when installed in the United States. This appliance, when installed, must be electrically connected and grounded in accordance with local codes, or in the absence of local codes, with the current CSA C22.1 Canadian Electrical Code or with the National Electrical Code; ANSI/NFPA 70 when installed in the United States.

⚠ WARNING

FOR SAFE INSTALLATION AND OPERATION OF YOUR GAS FIREPLACE PLEASE NOTE THE FOLLOWING:

1. Do not clean when the glass is hot.
2. Do not use abrasive cleaners.
3. Using a substitute glass will void all product warranties.
4. For safe operation, glass doors must be closed.
5. When purging the gas line, the glass front must be removed.
6. Do not strike or abuse glass. Take care to avoid breakage.
7. Do not alter gas orifice.
8. No substitute materials may be used other than factory supplied components.
9. This appliance gives off high temperatures and should be located out of heavy traffic areas and away from furniture and draperies.
10. Children and adults should be alerted to the hazards of the high surface temperatures of this appliance and should stay away to avoid burns or ignition of clothing.
11. Young children should be carefully supervised when they are in the same room as the appliance. Toddlers, young children and others may be susceptible to accidental contact burns. A physical barrier is recommended if there are at risk individuals in the house. To restrict access to a fireplace or stove, install an adjustable safety gate to keep toddlers, young children and other at risk individuals out of the room and away from hot surfaces.
12. Under no circumstances should any solid fuels (wood, paper) be used in this appliance.
13. Under no circumstances should this appliance be modified. Any parts that have to be removed for servicing should be replaced prior to operating this appliance.
14. Any safety screen, guard, or barrier removed for servicing an appliance must be replaced prior to operating the appliance.
15. Installation and repair should be done by a qualified service person. The appliance should be inspected before use and at least annually by a professional service person. More frequent cleaning may be required due to excessive lint from carpeting, bedding material, et cetera. It is imperative that control compartments, burners and circulating air passageways of the appliance be kept clean. Make sure that the gas valve and pilot light are turned off before you attempt to clean this unit.
16. Clothing or other flammable material should not be placed on or near the appliance. This appliance should not be used as a drying rack for clothing nor should Christmas stockings or decorations be hung from it.
17. Do not use this heater if any part has been under water. Immediately call a qualified service technician to inspect the heater and to replace any part of the control system and any gas control which has been under water.
18. Do not operate appliance unless completely installed as per installation instructions.
19. Failure to position the parts in accordance with these diagrams or failure to use only parts specifically approved with this appliance may result in property damage or personal injury.
20. **WARNING: Do not operate appliance with the glass front removed, cracked or broken. Replacement of the glass should be done by a licensed or qualified service person.**
21. The appliance area must be kept clear and free from combustible materials, gasoline, and other flammable vapors and liquids.
22. The front of the fireplace gives off high temperatures that could ignite combustible material which is kept close to the front of the unit.
23. Ensure that power to the Fireplace is turned off before servicing.
24. Do not operate this Fireplace without the glass front or with a broken glass.
25. Improper installation, adjustment, alteration, service or maintenance can cause injury or property damage. Refer to the owner's information manual provided with this appliance. For assistance or additional information consult a qualified installer, service agency, or the gas supplier.
26. Operation of this appliance when not connected to a properly installed and maintained venting system or tampering with the blocked vent shutoff system can result in carbon monoxide (CO) poisoning and possible death.
27. This appliance is equipped with a three-prong (grounding) plug for your protection against shock hazard and should be plugged directly into a properly grounded three-prong receptacle. Do not cut or remove the grounding prong from this plug.
28. **NOT INTENDED FOR USE AS A PRIMARY HEAT SOURCE.** This appliance is tested and approved as either supplemental room heat or as a decorative appliance. It should not be factored as primary heat in residential heating calculations.
29. This appliance must not be connected to a chimney flue serving a separate solid-fuel burning appliance.
30. Remove all loose materials from the appliance (manual, remote control, etc.) before connecting gas and electricity.
31. Ensure that the remote control is "OFF" before connecting gas and electricity to the appliance.

Installation Requirements for the Commonwealth of Massachusetts

In the Commonwealth of Massachusetts, the installer or service agent shall be a plumber or gas fitter licensed by the Commonwealth.

When installed in the Commonwealth of Massachusetts or where applicable codes; the unit shall be installed with a CO detector per the requirements listed below.

1. For direct-vent appliances, mechanical-vent heating appliances or domestic hot water equipment, where the bottom of the vent terminal and the air intake is installed below four feet above grade the following requirements must be satisfied:
   - **A.** If there is not one already present, on each floor level where there are bedroom(s), a carbon monoxide detector and alarm shall be placed in the living area outside the bedroom(s). The carbon monoxide detector shall comply with NFPA 720.
   - **B.** A carbon monoxide detector shall be located in the room that houses the appliance or equipment and shall:
     - Be powered by the same electrical circuit as the appliance or equipment such that only one service switch services both the appliance and the carbon monoxide detector;
     - Have battery back-up power;
     - Meet ANSI./UL 2034 Standards and comply with NFPA 720; and
     - Have been approved and listed by a Nationally Recognized Testing Laboratory as recognized under 527 CMR.
   - **C.** A Product-approved vent terminal must be used, and if applicable, a Product-approved air intake must be used. Installation shall be in strict compliance with the manufacturer's instructions. A copy of the installation instructions shall remain with the appliance or equipment at the completion of the installation.
   - **D.** A metal or plastic identification plate shall be mounted at the exterior of the building, four feet directly above the location of vent terminal. The plate shall be of sufficient size to be easily read from a distance of eight feet away, and read "Gas Vent Directly Below".
2. For direct-vent appliances, mechanical-vent heating appliances or domestic hot water equipment where the bottom of the vent terminal and the air intake is installed above four feet above grade the following requirements must be satisfied:
   - **A.** If there is not one already present, on each floor level where there are bedroom(s), a carbon monoxide detector and alarm shall be placed in the living area outside the bedroom(s). The carbon monoxide detector shall comply with NFPA 720.
   - **B.** A carbon monoxide detector shall:
     - Be located in the room that houses the appliance or equipment;
     - Be either hard-wired or battery powered or both; and
     - Shall comply with NFPA 720.

A Product-approved vent terminal must be used, and if applicable, a Product-approved air intake must be used. Installation shall be in strict compliance with the manufacturer instructions. A copy of the installation instructions shall remain with the appliance or equipment at the completion of the installation.

For the state of Massachusetts a **T-handle gas shut-off valve** must be used on a gas appliance. This T-handle gas shut-off valve must be listed and approved by the state of Massachusetts. This is in reference to the state of Massachusetts state code CMR238.

Carbon Monoxide (CO) Detector

NOTE: It is recommended that a Carbon Monoxide (CO) Detector be installed in or near bedrooms and on all levels of your home. Place a detector about 15ft [4.5m] outside the room that houses your gas appliance.

Certified for installation in a bedroom or bed/sitting room. In Canada must be installed with listed millivolt thermostat. In USA see local codes.

⚠ WARNING

This product and the fuels used to operate this product (liquid propane or natural gas), and the products of combustion of such fuels, can expose you to chemicals including benzene, which is known to the State of California to cause cancer and reproductive harm. For more information go to: www.P65Warnings.ca.gov.

Mobile Home/Manufactured Housing Installation

This Direct Vent System Appliance must be installed in accordance with the manufacturer's installation instructions and the Manufactured Home Construction and Safety Standard Title 24 CFR, Part 3280, or the current Standard for Fire Safety Criteria for Manufactured Home Installation, Sites, and Communities ANSI/NFPA 501A, and with CAN/CSA Z240 MH Mobile Home Standard in Canada.

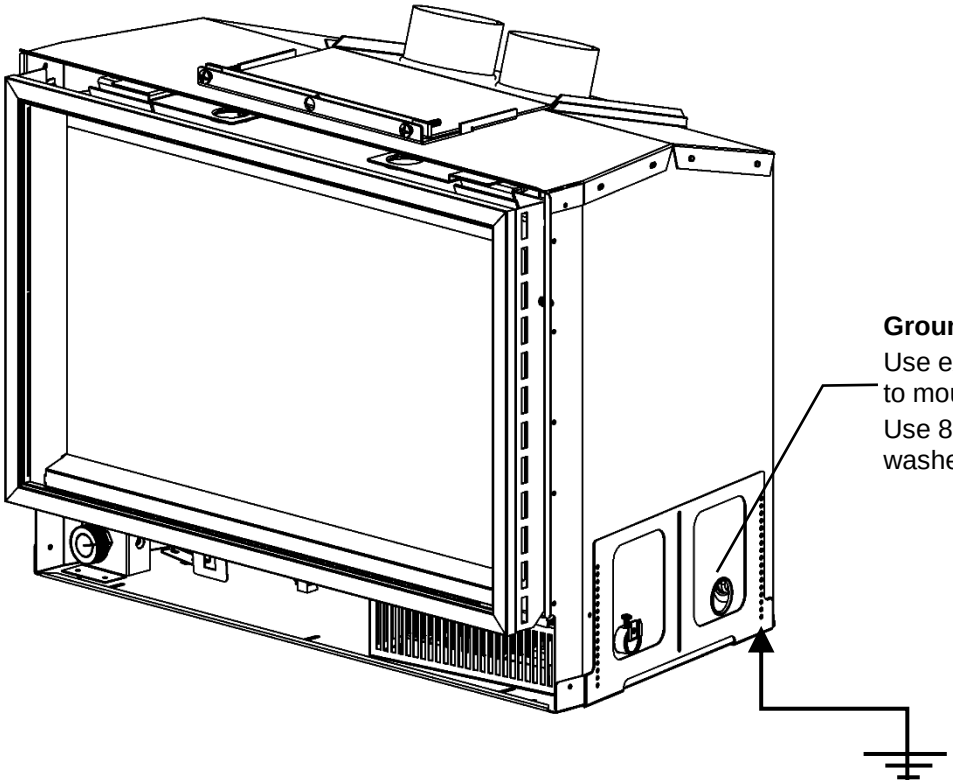

Ground to steel chassis of mobile home.
Use existing hole or remove existing screw to mount ground wire to screw.
Use 8 gauge copper wire and serrated washer and bolt.

THIS APPLIANCE MAY BE INSTALLED IN MANUFACTURED (MOBILE) HOMES AFTER FIRST SALE.

Please follow the current ANSI/NFPA 70 National Electrical Code in the USA and CAN/CSA C22.1 Canadian National Electrical Code in Canada.

An appliance must be grounded to the steel chassis of the home with 8ga. copper wire using a serrated or star washer to penetrate paint or protective coating to insure grounding.

Use carriage bolt at the attachment point (see diagram above) to secure the appliance to the floor.
Bedroom approved.

⚠ Warning:
Do not compromise the structural integrity of the manufactured home wall, floor or ceiling, during installation of appliance or venting.

For required venting components see venting installation in appropriate section of this manual.

IDV24 Fireplace Openings

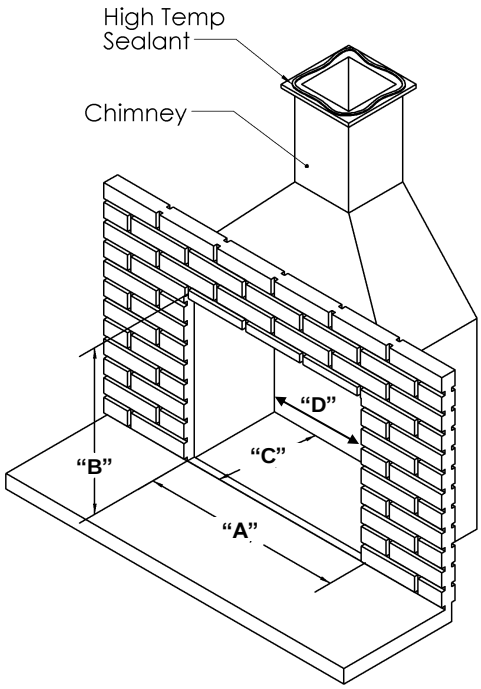

	REQUIRED DIMENSION
A Front Width	24-1/4”
B Height	18-1/2”
C Depth	14”
D Back Width	19-1/4”

IDV24 Fireplace Dimensions

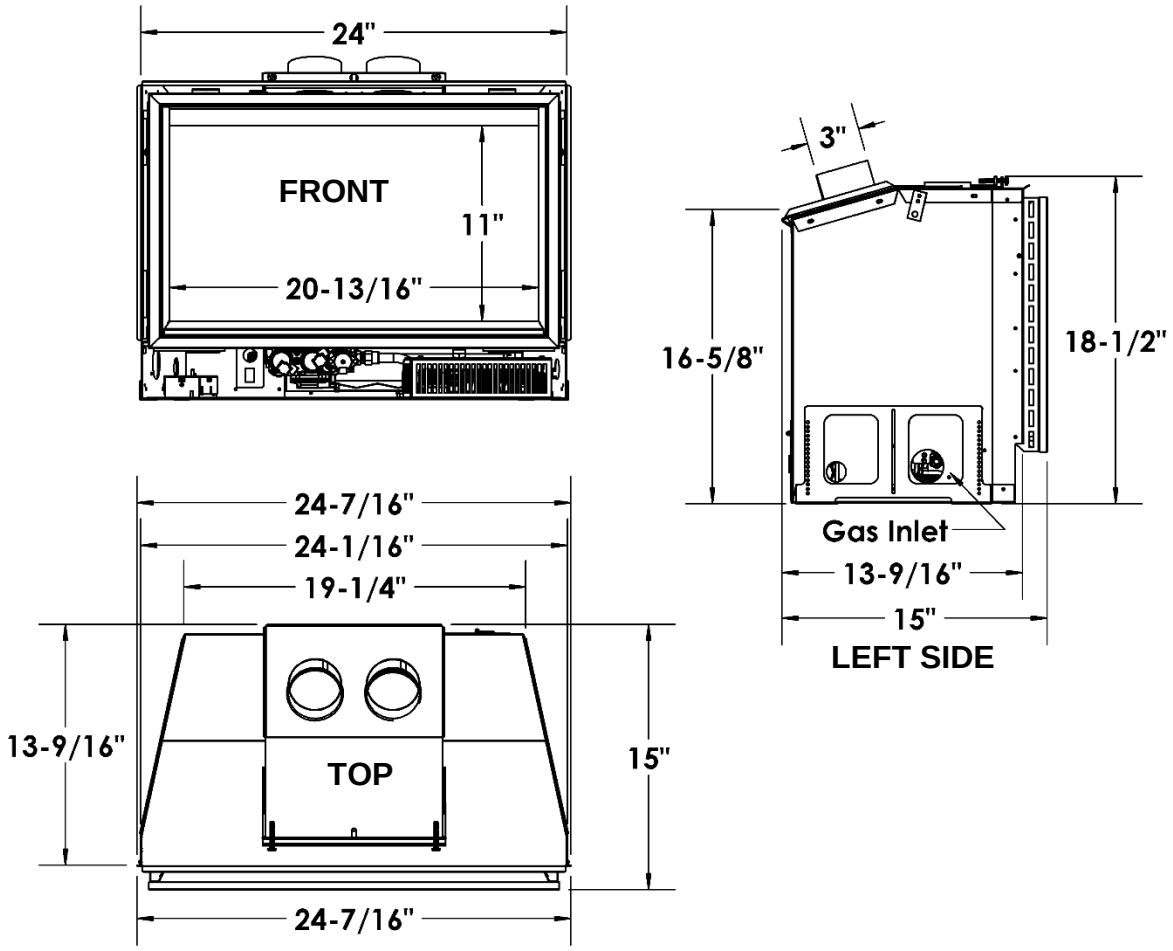

IDV24 - Clean View and Surround Options

I24CV1BL

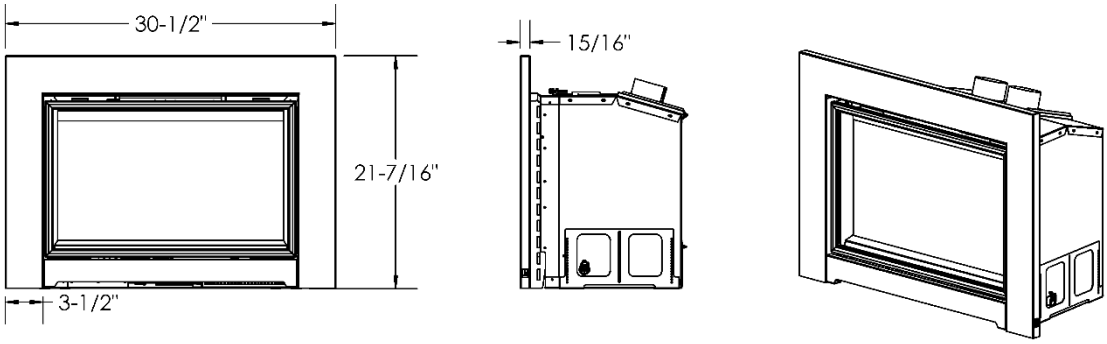

I24CV1BL with
I24S3827 Surround

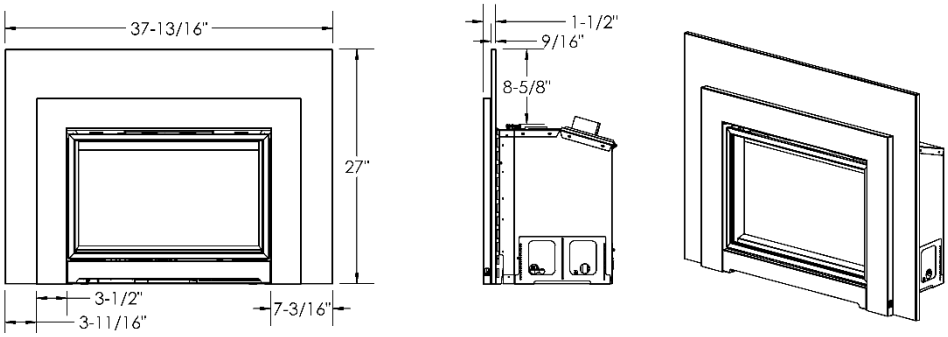

I24CV1BL with
I24S3827 Surround,
I34R40 Riser,
I33CS Mantel Clearance Shield

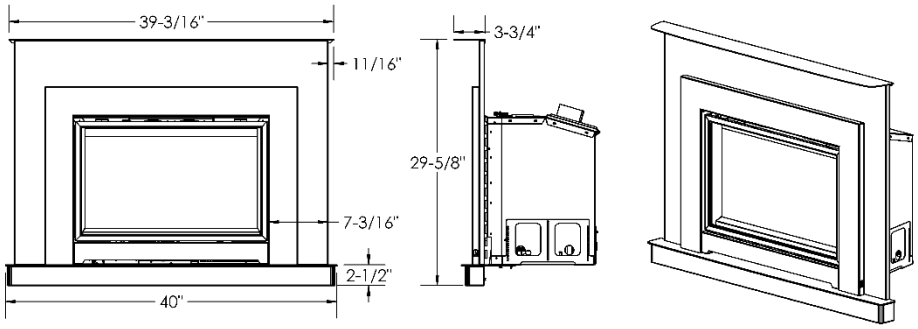

I24CV1BL with
I24SPF3829 Picture Frame Surround

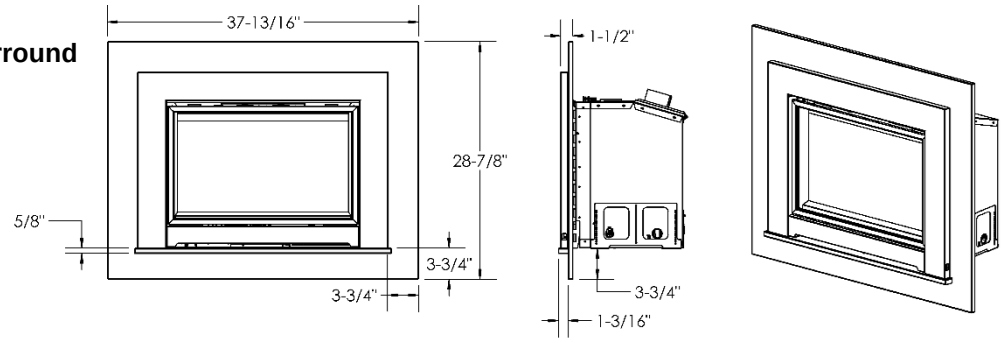

I24CV1BL with
I24SU4541 Universal Surround

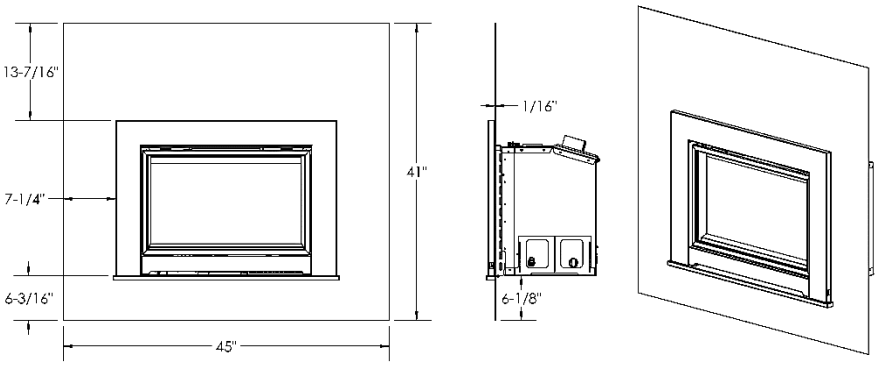

I24SU4541 -Universal Surround- IDV24

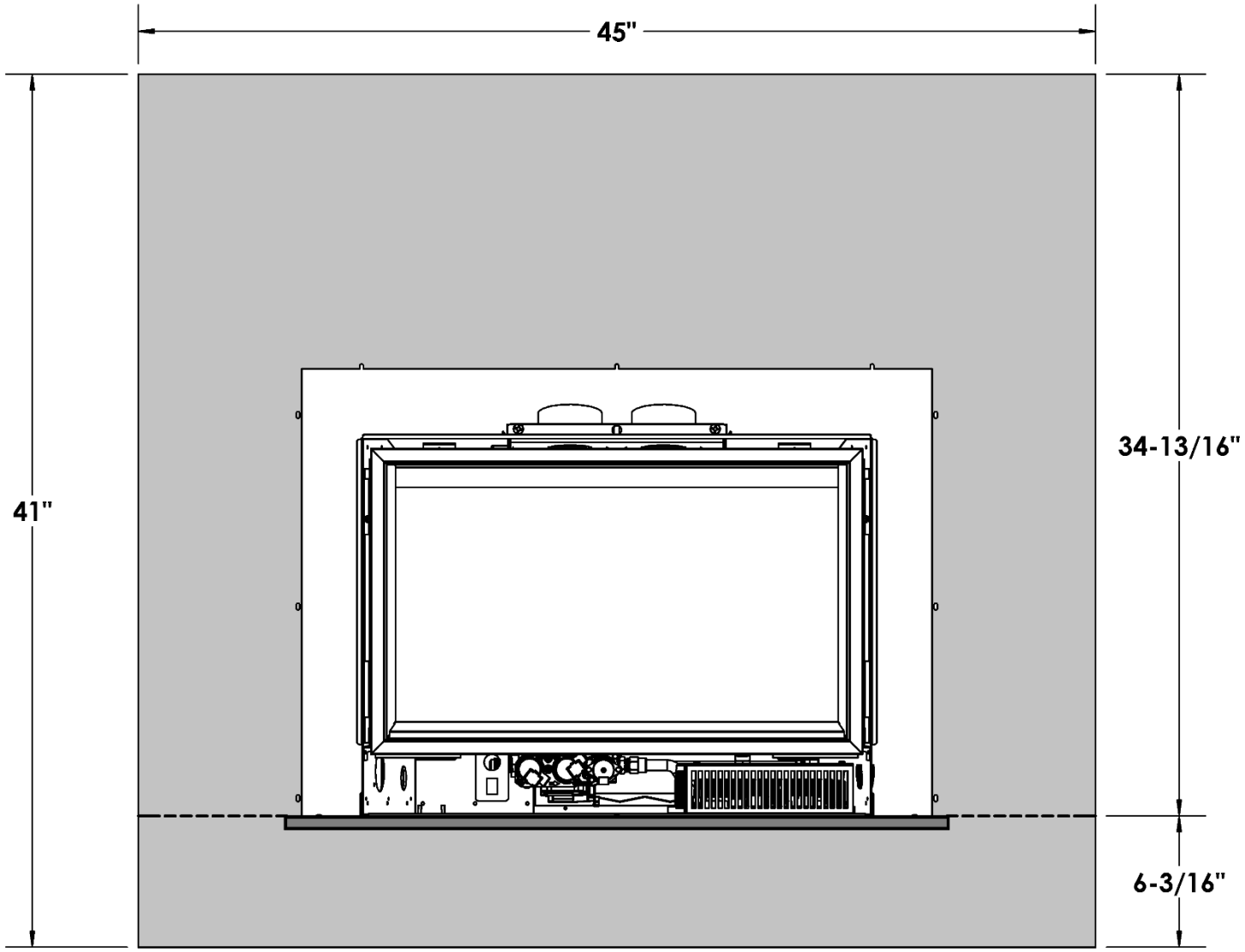

For use with I24CV1BL.

This Surround can be custom cut and bent.

NOTE: If you wish to make the bottom of the surround flush with the fireplace bottom, cut surround at dotted line.

The Surround Ledge can be removed by drilling out the three rivets.

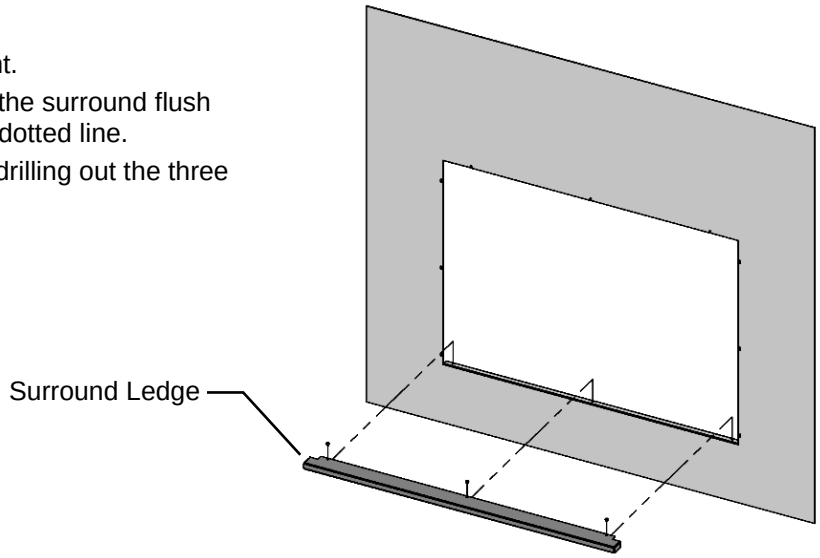

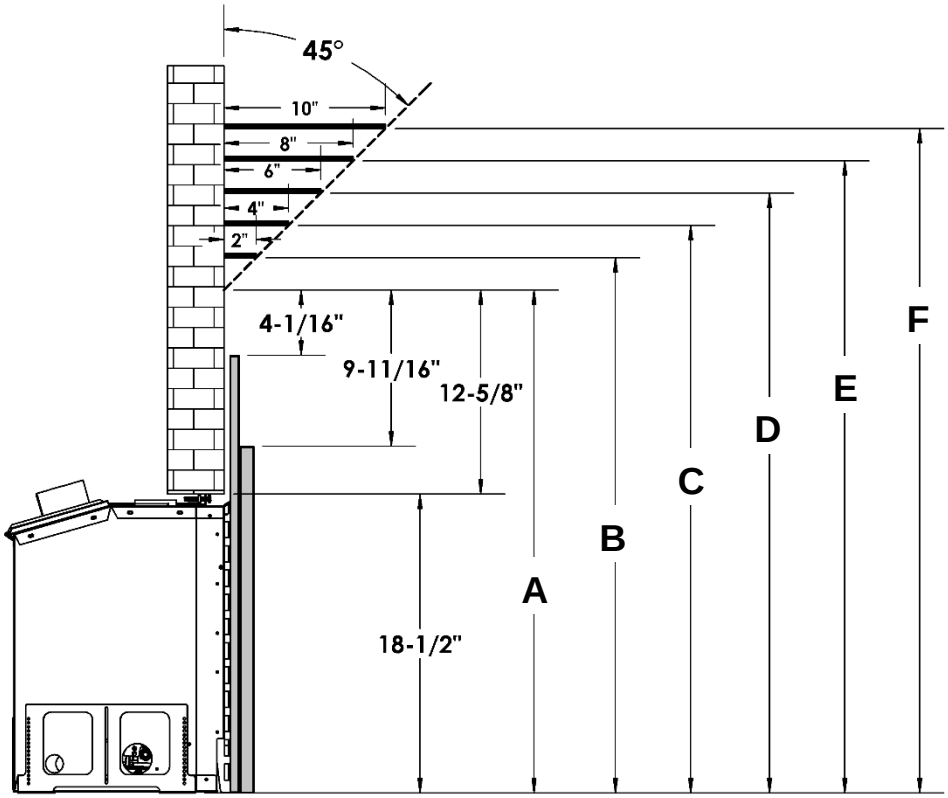

IDV24 Combustible Mantel Heights			
Dimension	**Mantel Depth**	**I24CV1 Only or with Surround**	**I24CV1 with Surround and I33CS Mantel Shield**
A	0”	31-1/8”	31-1/8”
B	2”	33-1/8”	33-1/8”
C	4”	35-1/8”	35-1/8”
D	6”	37-1/8”	37-1/8”
E	8”	39-1/8”	39-1/8”
F	10”	41-1/8”	41-1/8”

⚠ **WARNING:** Combustible objects must not be placed on a non-combustible mantel unless the non-combustible mantel meets the minimum height and width requirements for a combustible mantel.

IDV24 – Wall Coverings, Side Walls and Hearth Requirements

Refer to Mantel Heights Chart for detailed information.

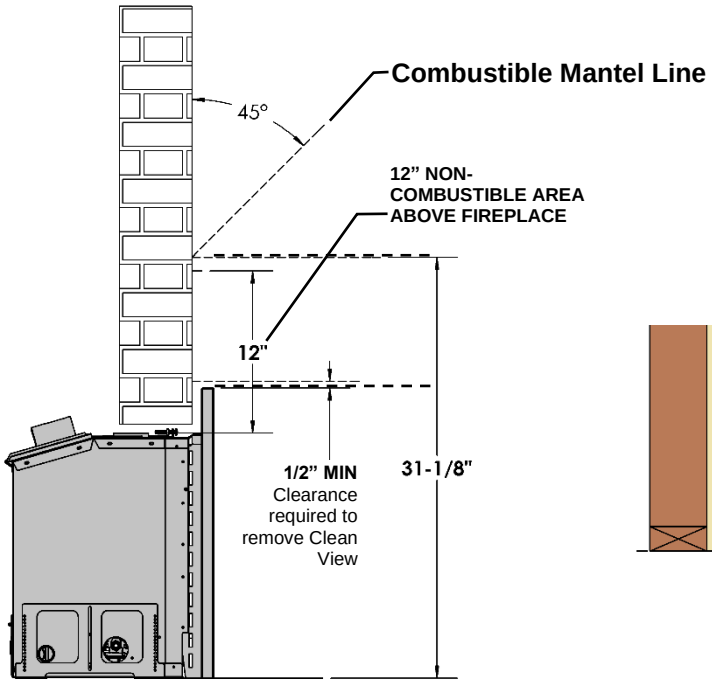

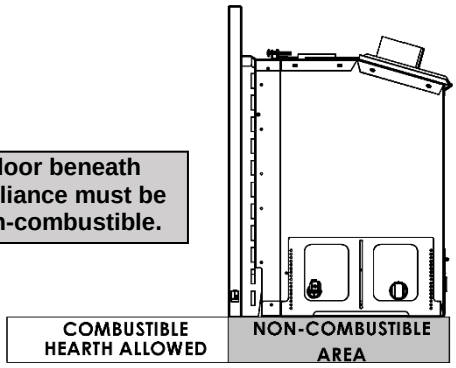

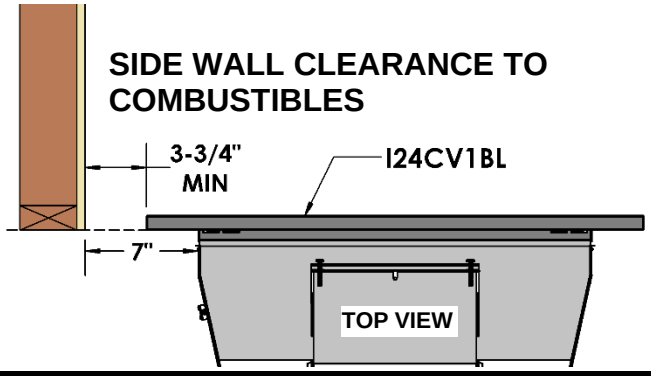

Using Steel Studs and Concrete Board

Brick facing may be removed and replaced with non-combustible materials such as steel studs and concrete board. The opening between the firebox and non-combustive materials must be sealed so as the heat cannot run between the face of the wood fireplace and the re-facing materials.

Insert must be pulled out so the appliance is flush with the finishing materials and the clean view kit is proud of the finished non-combustible enclosure (wood burning fireplace).

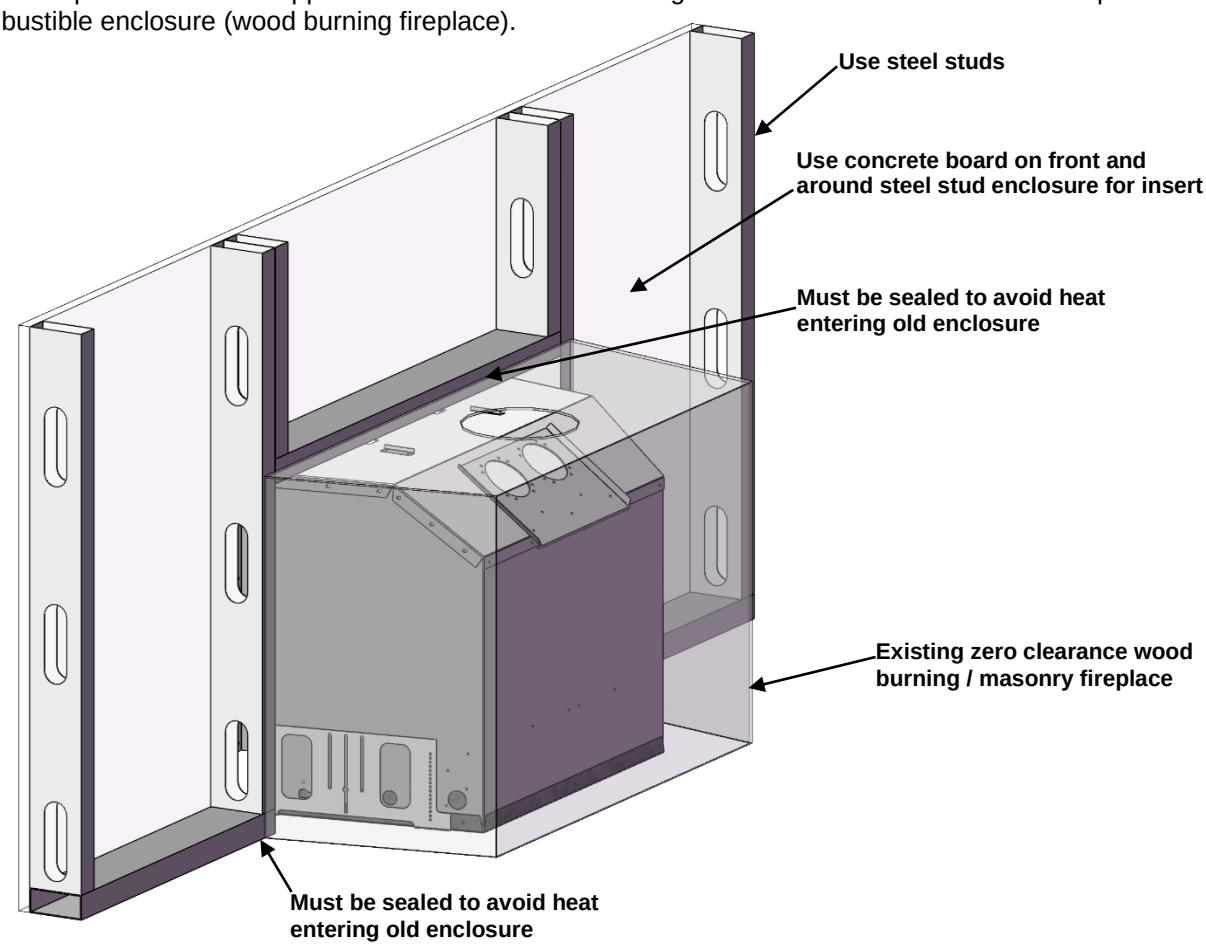

IDV24 - Leveling Instructions

When installing insert it may be necessary to support back of unit. There are two leveling legs at the back sides of the appliance. Measure the height of the space to be leveled. Remove screws and set leveling legs to proper height. Replace screws.

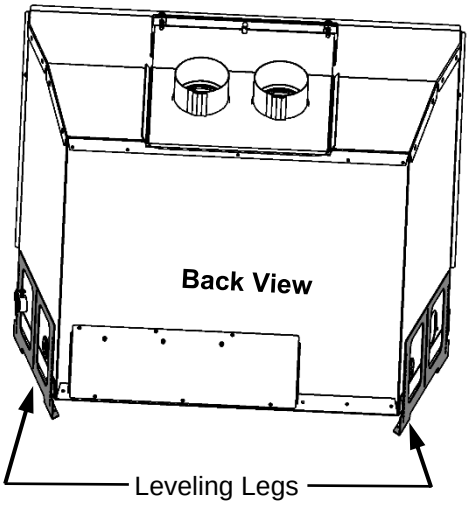

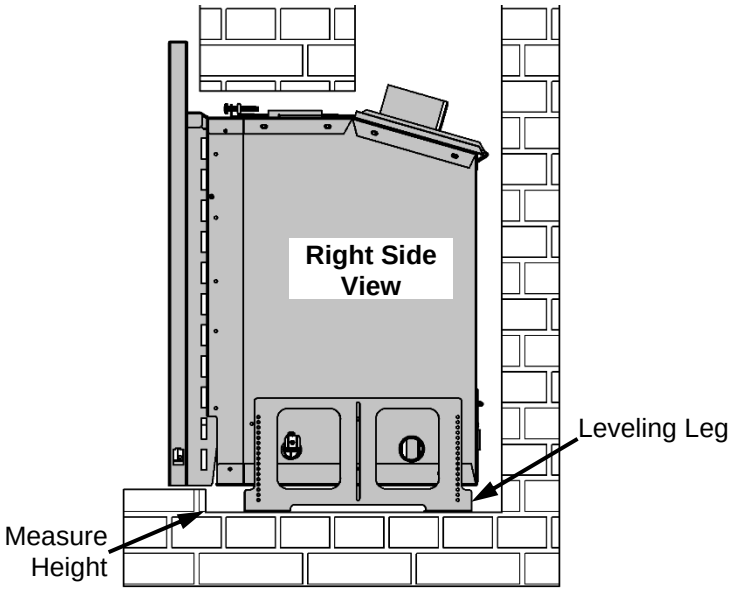

IDV24 - Riser Kit Installation Instructions – Model No.: I34R40

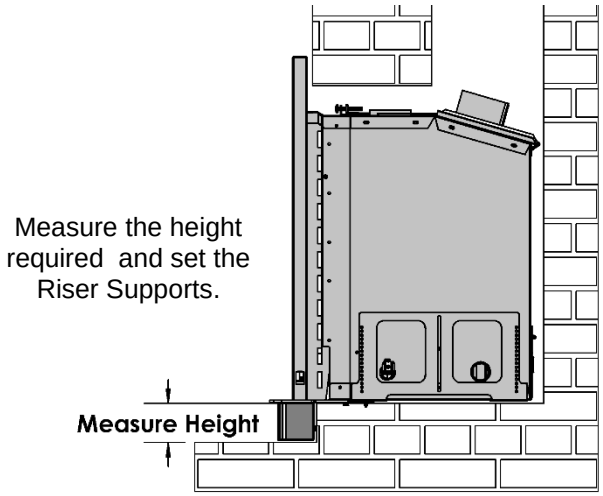

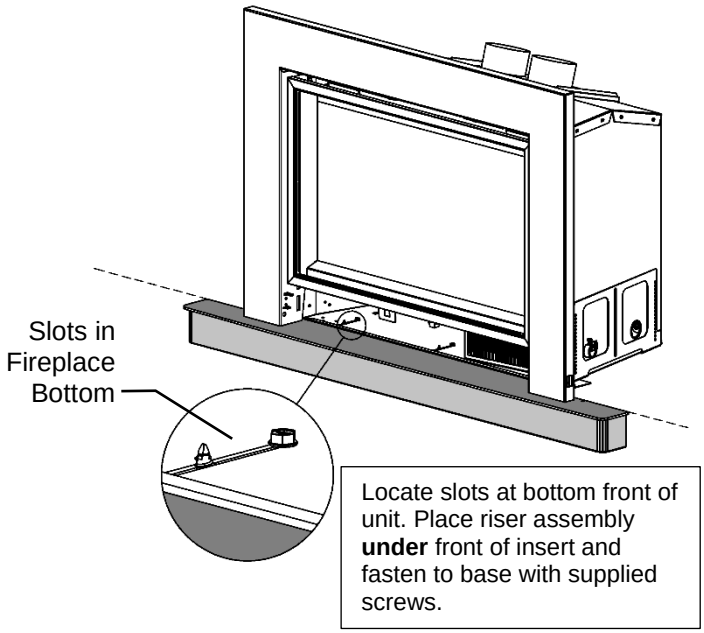

Locate slots at bottom front of unit. Place riser assembly **under** front of insert and fasten to base with supplied screws.

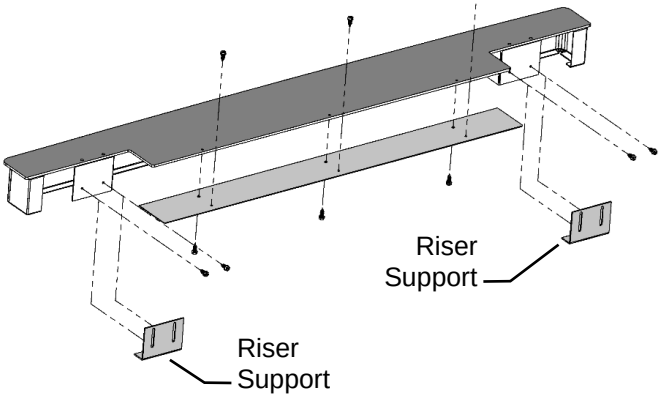

Note: For a minimum opening width of 24-1/4":
Riser must be trimmed 9/16" on both sides as shown below.

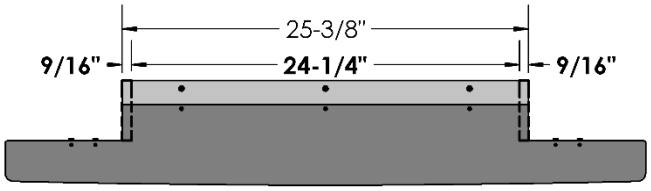

⚠ WARNING: Failure to position the parts in accordance with these diagrams or failure to use only parts specifically approved with this appliance may result in property damage or personal injury.

IDV24 – Surround Installation

IDV24 Surrounds: I24S3827, I24SPF3829, 124SU4541

All surrounds attach to the back of the Clean View.

PARTS LIST:
-Surround
- [Qty 9] #6 Black Screws

Surround Attachment:

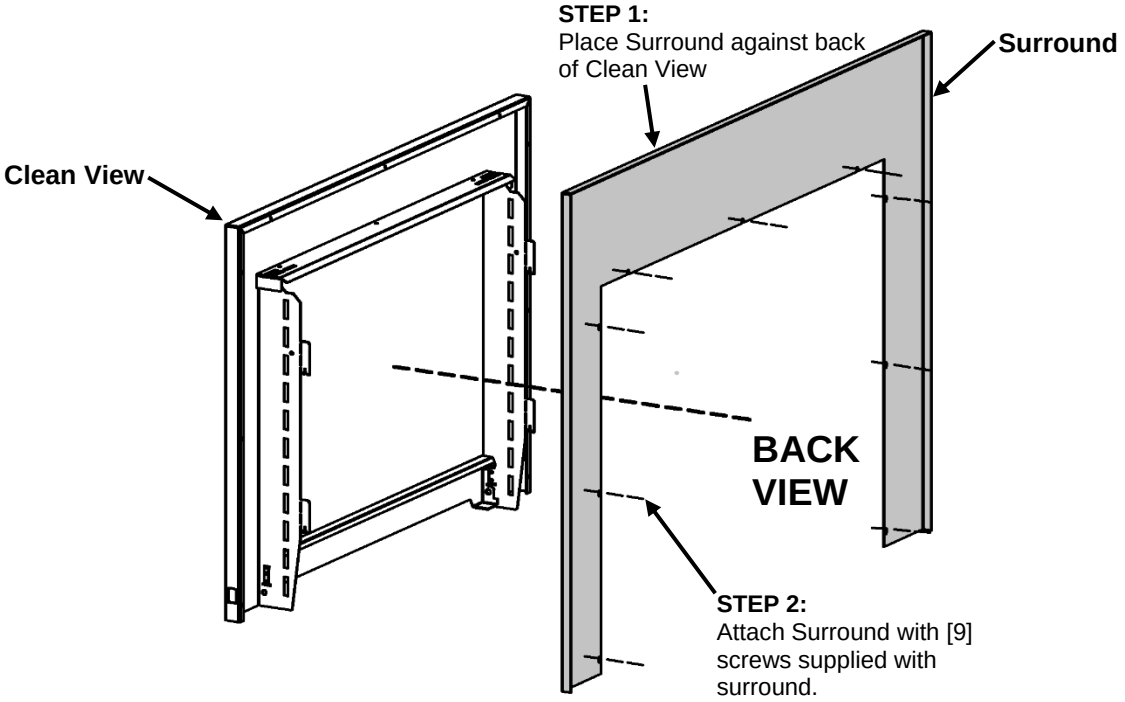

Clean View with attached Surround can now be installed onto Fireplace.

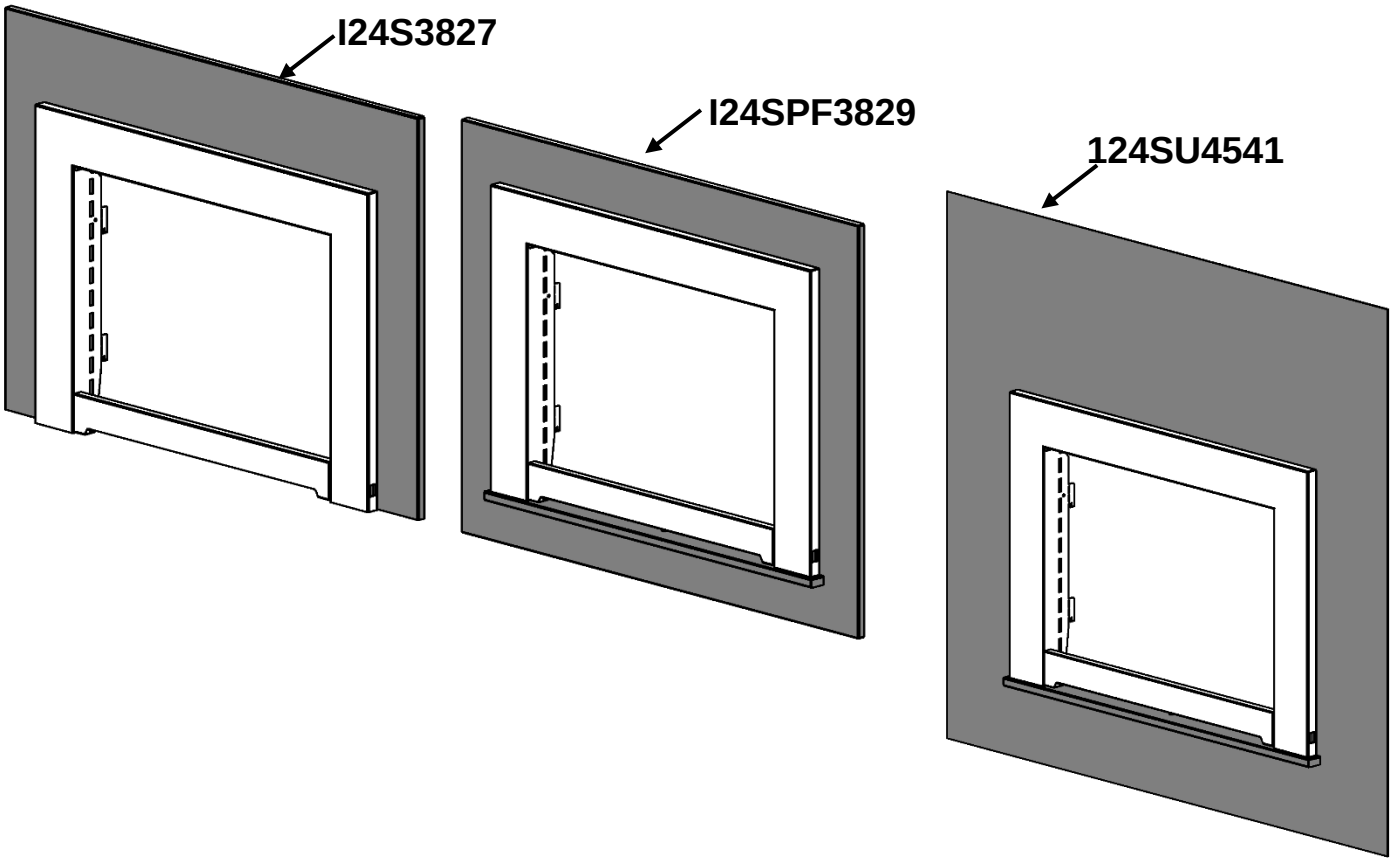

IDV24	Clean View Attachment
Parts List: -I24CV1BL Clean View -Safety Screen	**NOTE: Vent adapter and venting must be connected to the unit before Clean Views and Surrounds are attached.** Refer to Installation of Vent Pipe section of this manual for venting information.

SECTION 1: Optional **Surrounds** are fastened to the Clean View.
If a surround is to be used, install onto the CV Kit ***before*** it is mounted.

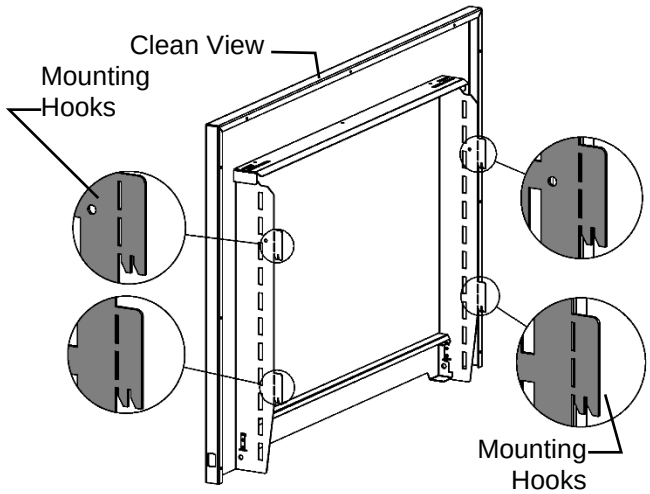

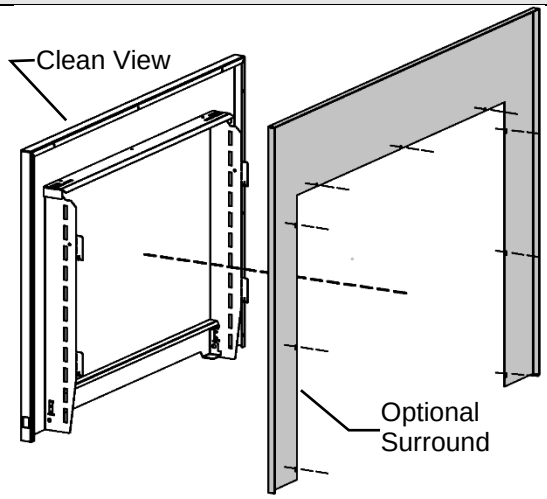

SECTION 2: Clean View Mount Slots are located beside the Safety Screen Frame on the Fireplace. Insert the [4] Clean View Mount Hooks into the **Clean View Mount Slots** and lower the Clean View into place.

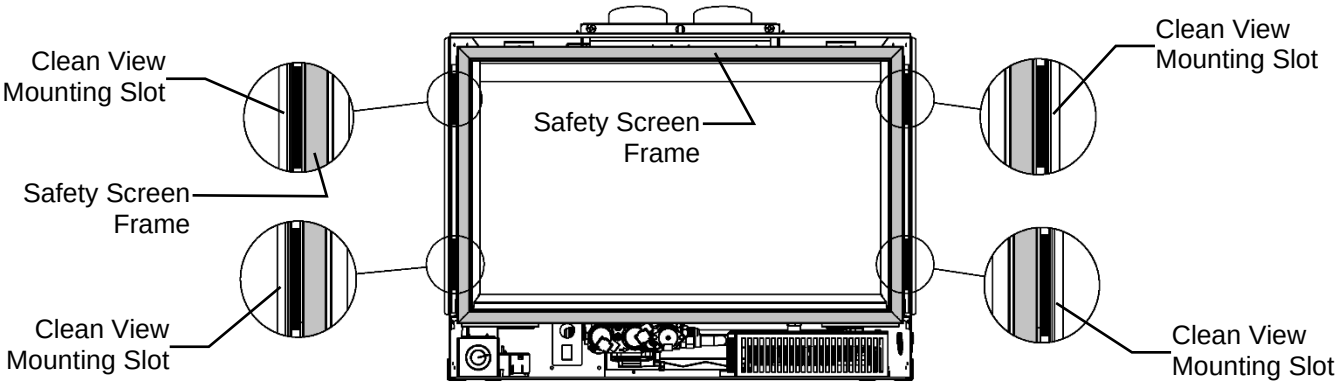

SECTION 3: Millivolt Systems - Install ON/OFF Switch into right side of Clean View. See below.

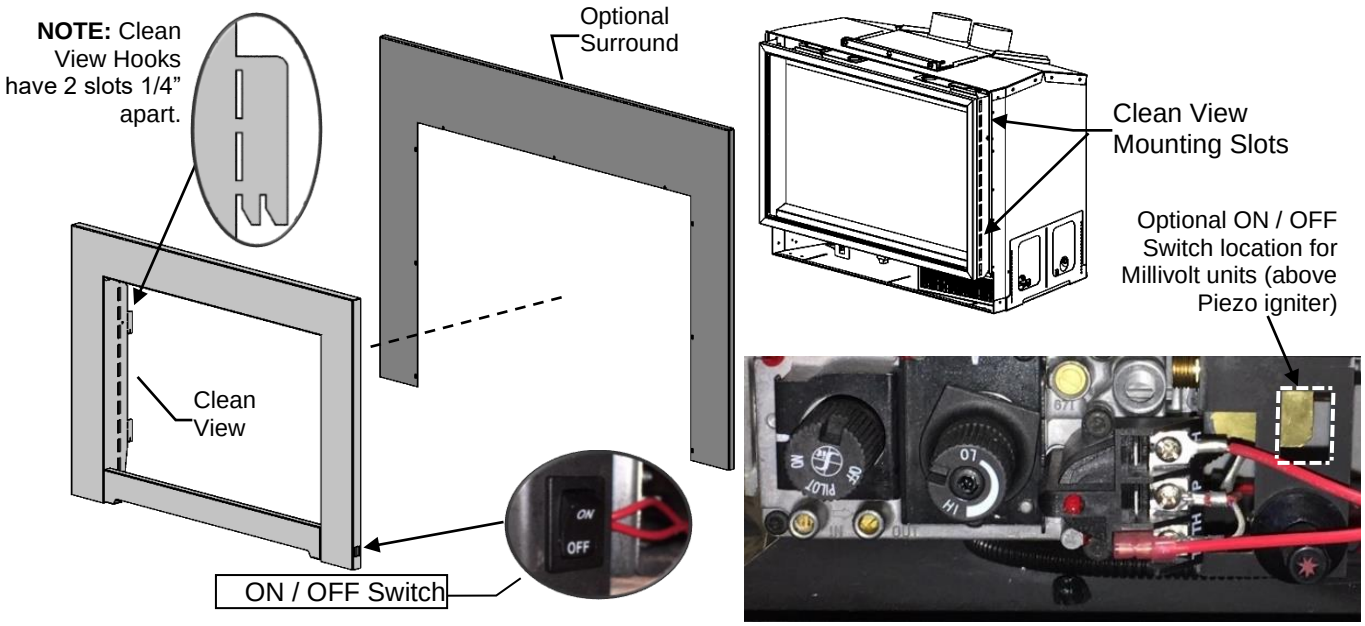

I33CS Mantel Clearance Shield Instructions Option

Contents of Kit: [1] Mantel Clearance Shield c/w Screws

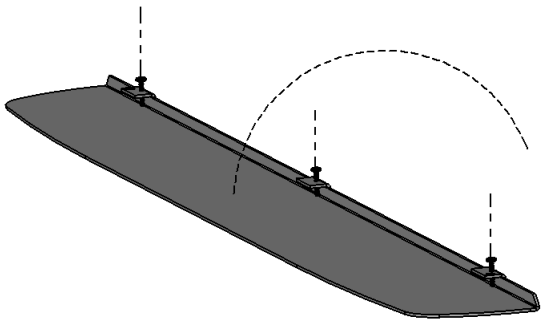

Place I33CS upside down on a protected surface. Loosen screws.

Center surround onto I33CS. Tighten screws to hold surround in place.

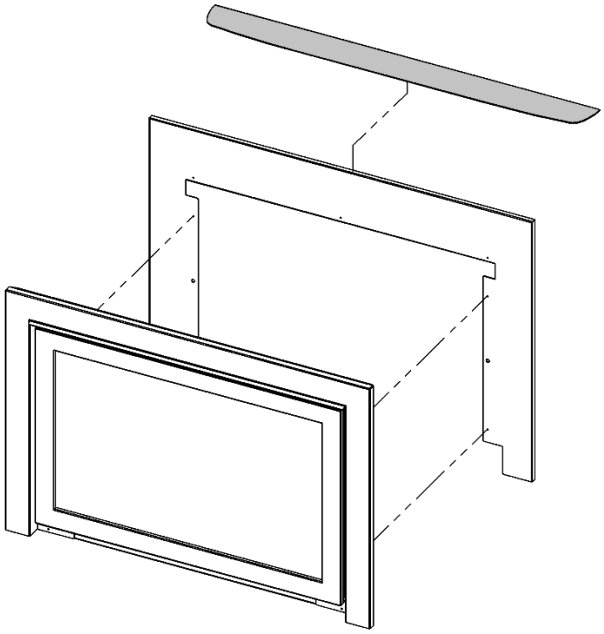

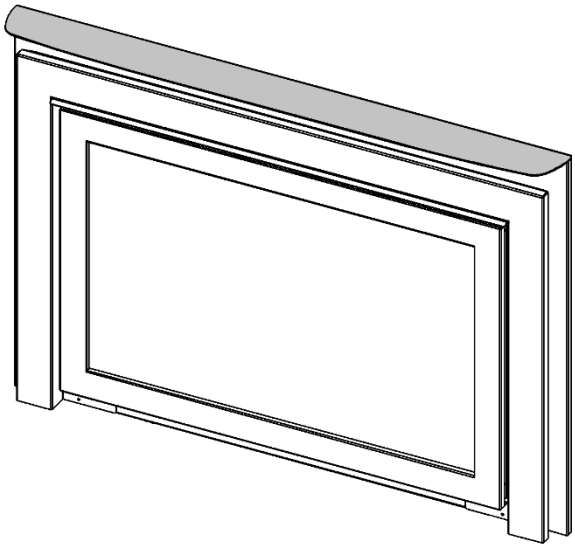

Surround is now ready to install onto Clean View.

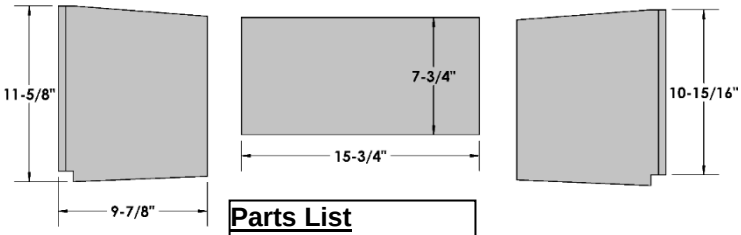

Parts List
-1 Back Panel
-1 Right Side Panel
-1Left Side Panel

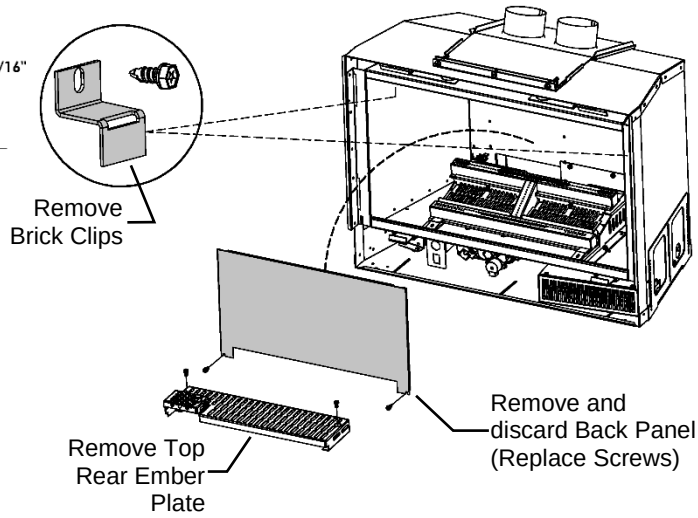

Prepare Fireplace:

1. Remove Brick Clips from sides of firebox.
2. Remove Top Rear Ember Plate.
3. Remove Back Panel and discard (**Replace** Screws).
4. **Replace** Top Rear Ember Plate.

Install the Back Panel.

Carefully slide and tilt Side Panels into place.

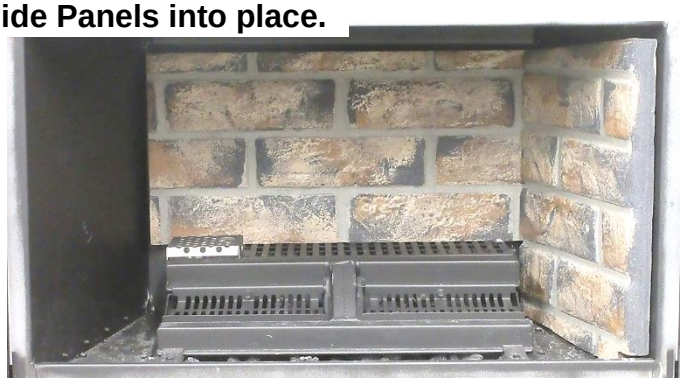

Reinstall Brick Clips into upper sides of firebox.

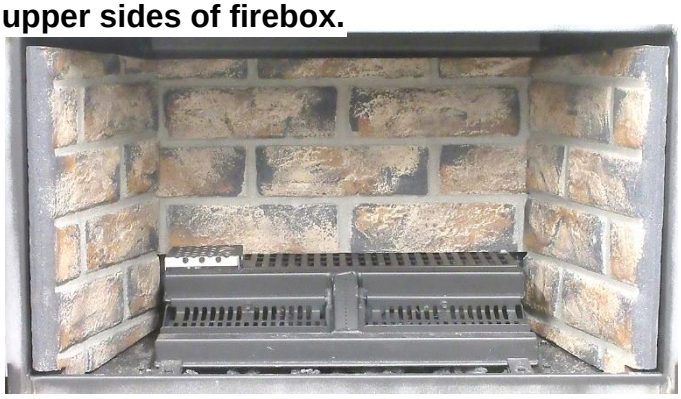

IDV24 MQLOGF24DW Driftwood and LOGF24OAK Oak Log Setup Option

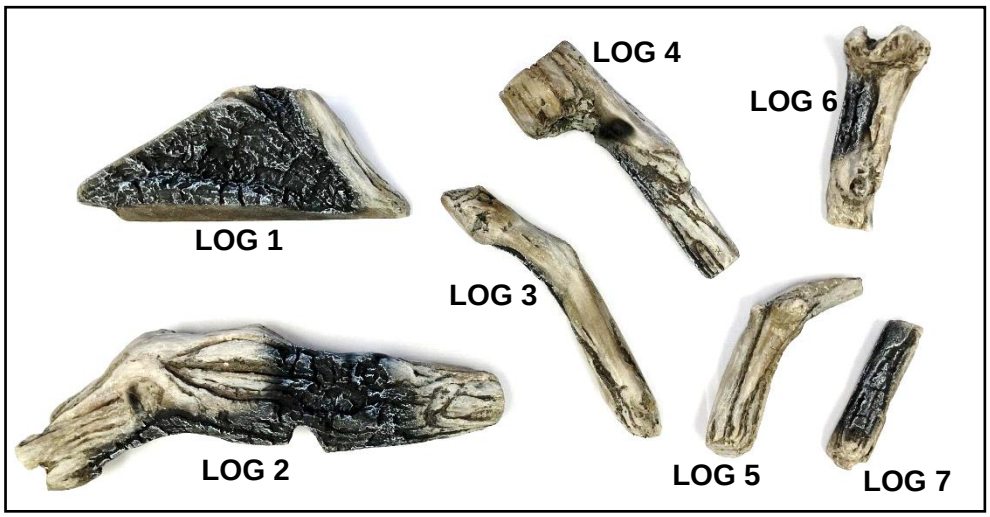

***NOTE: THESE ITEMS ARE SUPPLIED WITH THE FIREPLACE**

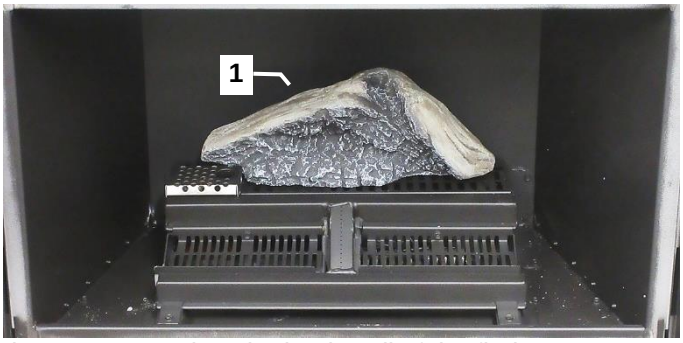

Place **Log 1** against the back wall of the firebox.

Place **Log 2** in the center of the firebox directly over the burner. Place **Lava Rock** around sides and front of firebox bottom.

Place **Log 3** along the right-side wall of the firebox.

Place **Log 4** across Log 1 and Log 2 on the left side.

Place **Log 5** along the left side wall of the firebox. Place **Log 6** across Log 1, Log 2, and Log 3 on the right side.

Place **Log 7** at the front of the firebox, just to the right of center. Place **Embers** and **Insulation Wool** directly onto Burner.

⚠ WARNING: Failure to position the parts in accordance with these diagrams or failure to use only parts specifically approved with this appliance may result in property damage or personal injury.

IDV24 Crushed Glass and Media Options - MQ Dealers Only -

IDV24 requires [Qty 2] 5LB bags of crushed glass. All glass is sold in 5 LB bags (Maximum 10 LBS of Glass).

GLASS SKU	DESCRIPTION
MQG5W	Decorative Glass 1/2" White
MQG5A	Decorative Ember Glass Cobalt Blue
MQG5B	Decorative Ember Glass - Black
MQG5ZG	Decorative Glass- Zircon Glacier Ice
MQG5C	Decorative Glass- Bronze

The following types of glass are approved:

- Kingsman Decorative Glass
- ½" Ember Glass Material from American Fireglass.

GLASS (MQG5W, MQG5A, MQG5B, MQG5ZG, MQG5C)

If you wish to use this media evenly spread the glass embers onto the false bottom and burner. Ensure the glass embers do not excessively overlap as this will affect the flame pattern. Use care when placing glass embers near the pilot area so as not block or have the glass fall over the crossover holes from the pilot to the burner, as delayed ignition can occur.

Use of any other glass can alter the performance of the unit and is not covered under warranty. Discoloration of glass media may occur if placed on the burner, this is not covered under warranty.

WARNING

- **Pilot Area Must Not Be Covered, as delayed ignition can occur.**
- **Do not change or substitute the glass ember material provided with this fireplace. If replacing, use only replacement glass embers available from your local authorized dealer.**

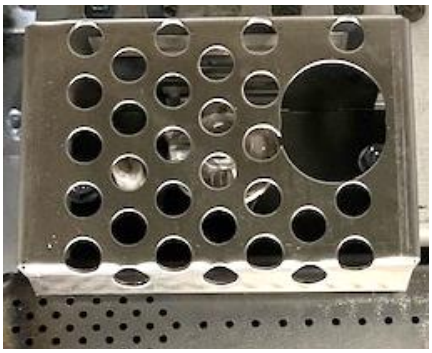

***Pilot Shield should be visually inspected monthly for signs of deterioration due to flame exposure. Replace if necessary.**

Z5GC KINGSMAN DECORATIVE BRONZE GLASS

Decorative Glass

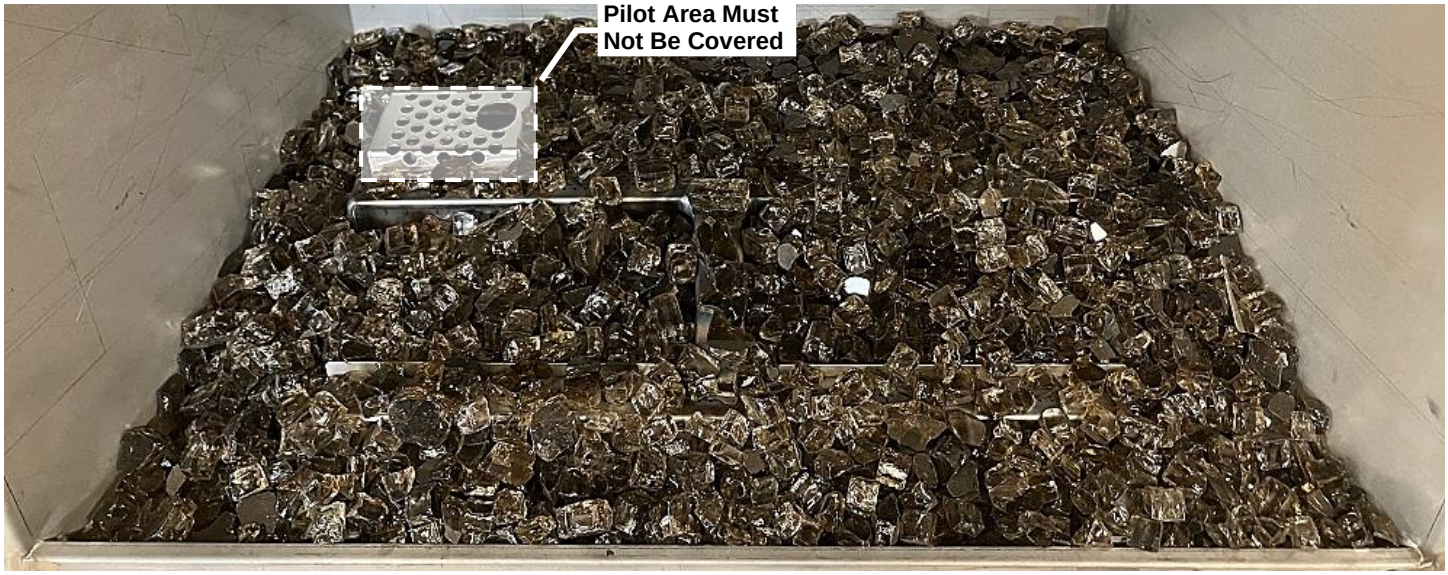

NOTE

- **Pilot Area Must Not Be Covered, as delayed ignition can occur.**

IDV24 - Marquis Collection - Options

MQROCK2, MQROCK3- MAXIMUM 21 PIECES CAN BE USED.

- **Lava Rock** is supplied with Base Unit. Do not place directly onto Burner.
- Place rocks randomly onto False Bottom and Burner. Do not place directly on burner ports.
- Not all rocks will be used on some installations.
- If sooting occurs change position of or remove affected objects.
- **MQ EMBER** can be placed on Burner.
- **MQ Glass** can be placed on Burner and Glass Tray.

⚠ NOTE

Pilot Area Must Not Be Covered, as delayed ignition can occur.

MQ STONE DECORATIVE STONE SET – MAXIMUM 60 PIECES CAN BE USED.

- MQ Stone can be placed on or around Burner.
- **Lava Rock** is supplied with Base Unit. Do not place directly onto Burner.
- Place Stones onto False Bottom and Burner. Do not place directly on burner ports or Pilot Area.
- Not all stones will be used on some installations.
- If sooting occurs change position of or remove affected objects.
- **MQ EMBER** can be placed on Burner.
- **MQ Glass** can be placed on Burner and Glass Tray.

- **MQEMBER-**

- To be placed directly on Burner and Burner Ports.
- Place these glowing ember chunks randomly. May be used with or without other accessories.

RBCB1 Cannonballs – DO NOT USE LARGE CANNONBALLS

Assorted size and colors. Place randomly as desired inside fireplace.

Can be used with MQ Glass, MQ Ember, and / or Lava Rock. Do not place Cannonballs directly on burner ports. If sooting occurs change position of or remove affected objects.

- **MQ Glass can be placed directly on Burner and on Glass Tray (Maximum 10 LBS of Glass).**
- **MQ Ember can be placed directly on Burner Only.**
- **Lava Rock (Supplied with Base Unit) CANNOT be placed on Burner.** Place Lava Rock in channel in front of Glass Tray & on Glass Tray.

NOTE

- **Pilot Area Must Not Be Covered, as delayed ignition can occur.**
- Do not place Cannonballs directly on burner ports.

Pilot Area Must Not Be Covered

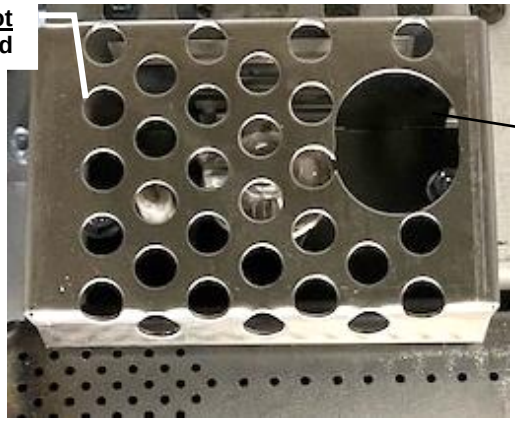

*Pilot Shield should be visually inspected monthly for signs of deterioration due to flame exposure. Replace if necessary.

IDV24 Fan Removal / Installation

⚠ WARNING

Electrical Grounding Instructions

This appliance is equipped with a three prong (grounding) plug for your protection against shock hazard and should be plugged directly into a properly grounded three-prong receptacle. Do not cut or remove the grounding prong.

Before Servicing:

1. Ensure all power supply is shut off.
2. Label all wires prior to disconnecting when servicing control. Wiring errors can cause improper and dangerous operation.
3. For fan servicing: Vacuum and clean lint/dirt build-up on the fan blades and motor.
4. When resealing the Burner Pan, use Mill Pac.

The fan can be accessed from the back of the unit. Remove the Rear Fan Access Cover from the back of the fireplace. The fan assembly is attached to this cover.

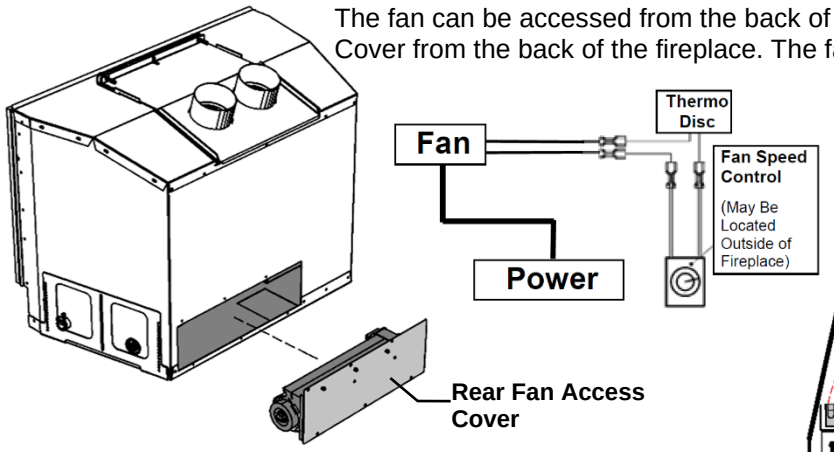

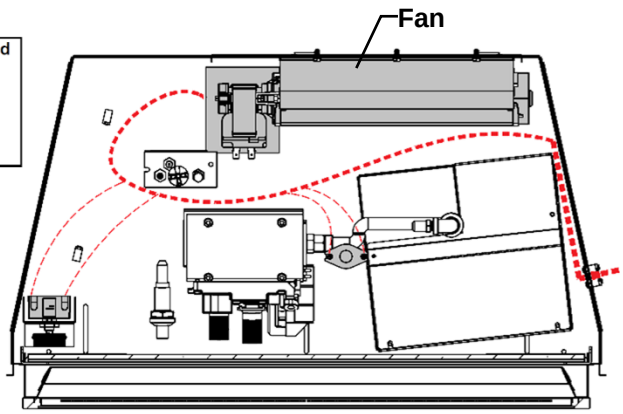

NOTE: If the fireplace is installed, the fan can be removed from inside the firebox. See illustrations below.

To Remove the fan through the firebox, follow the procedure below.

1. Remove the components shown.
2. Carefully work the Fan Access Cover and Thermodisc Cover (Millivolt & Proflame 1 models) loose from Mill-Pac seal.
3. Remove the [3] screws above the fan. Twist and rotate the fan to lift it out through the opening.
4. Apply fresh Mill-Pac sealant to Fan Access Cover and Thermodisc Cover when replacing components.

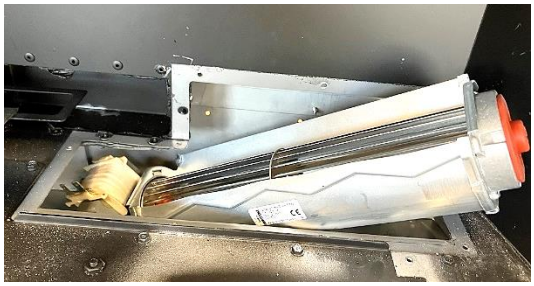

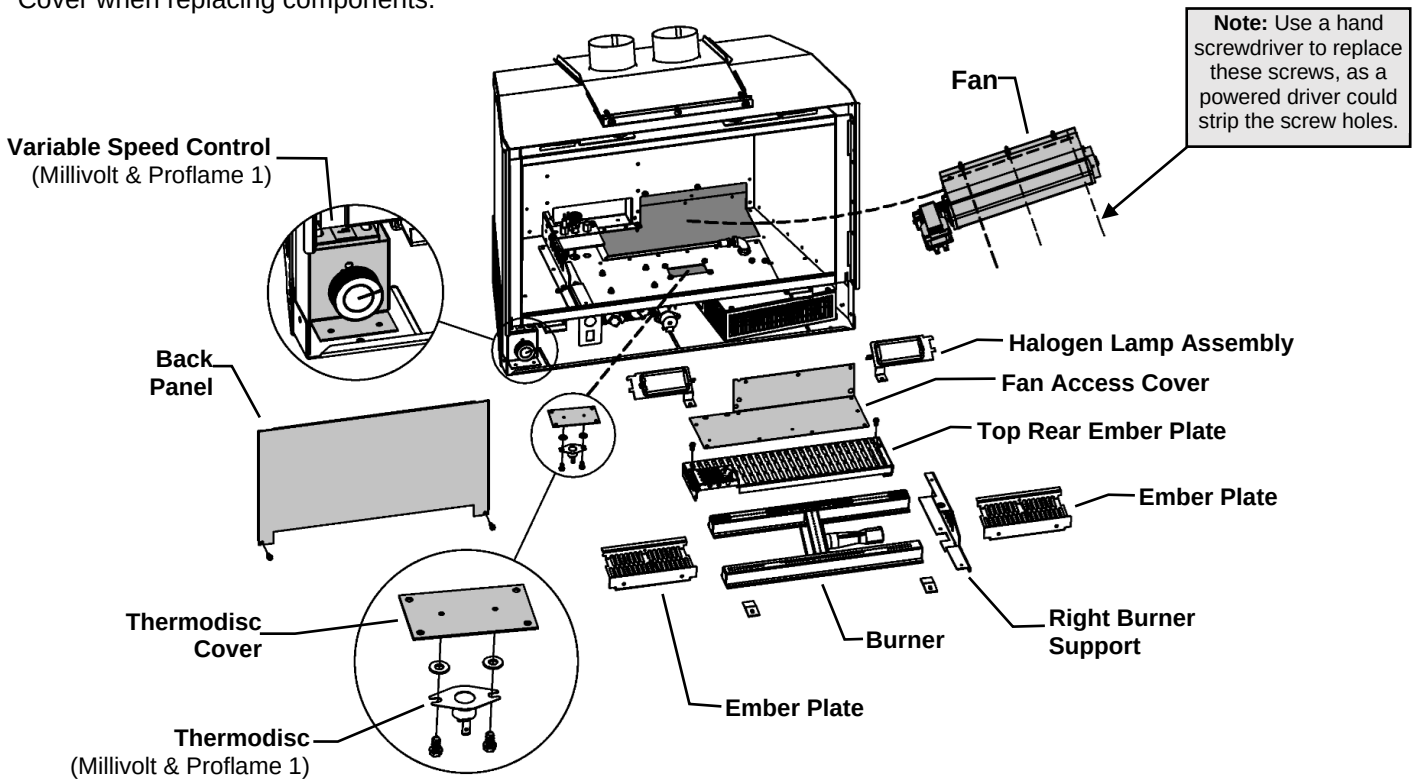

24IDV-ULK IDV24 Halogen Lights- Proflame 2 Units- Factory Installed Up to SN# 1807

Please follow the current ANSI/NFPA 70 National Electrical Code in the USA and CAN/CSA C22.1 Canadian National Electrical Code in Canada.

Components:

- Lamp Plate with insulated studs & wiring
- 12VAC Transformer with wire connectors
- [2] 12V Halogen Lights

Lamp Plate

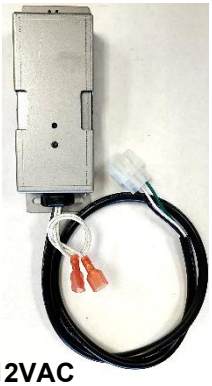

12VAC Transformer

[2] Halogen Lights

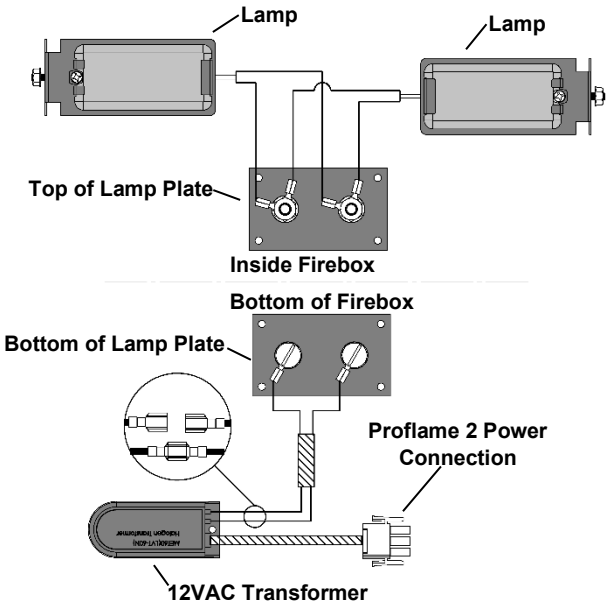

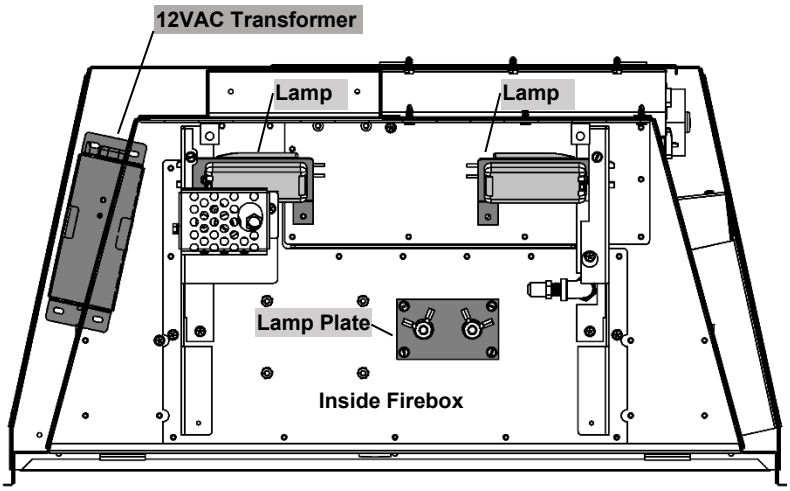

TOP VIEW

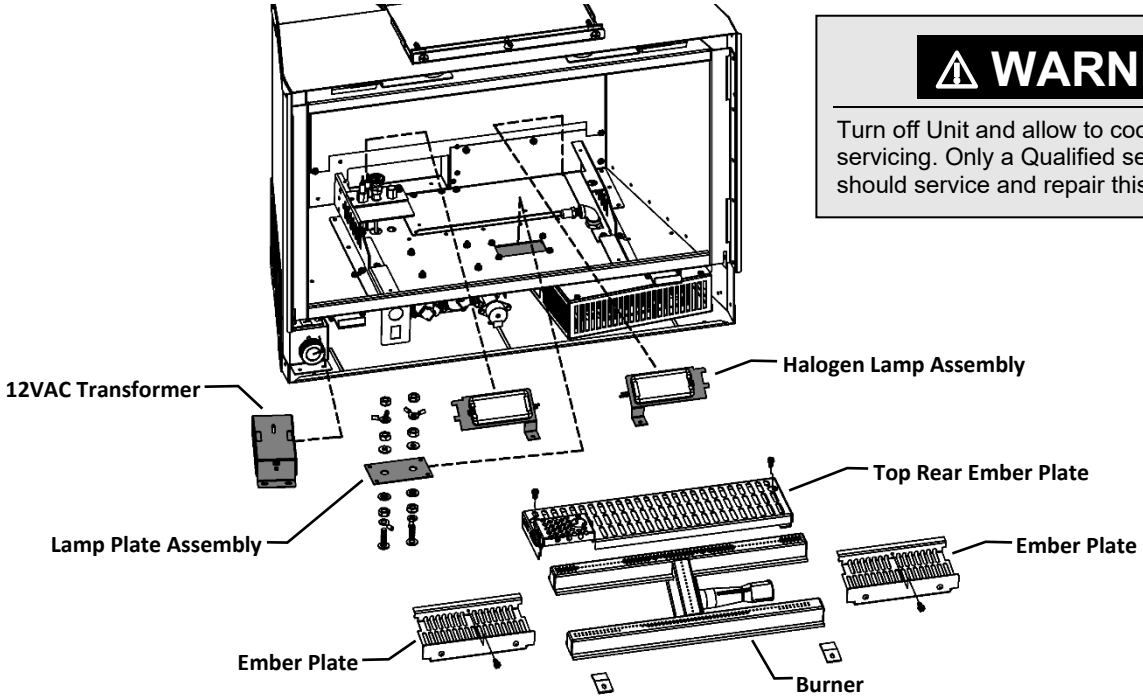

⚠ WARNING

Turn off Unit and allow to cool before servicing. Only a Qualified service technician should service and repair this appliance.

24IDV-ULK IDV24 Halogen Lights- Proflame 2 Units- Factory Installed SN# 1808 and Above

Please follow the current ANSI/NFPA 70 National Electrical Code in the USA and CAN/CSA C22.1 Canadian National Electrical Code in Canada.

Components:

- Lamp Plate with insulated studs & wiring
- 12VAC Transformer with [2] wire connectors
- [2] 12V Halogen Lights

Lamp Plate

12VAC Transformer

[2] Halogen Lights

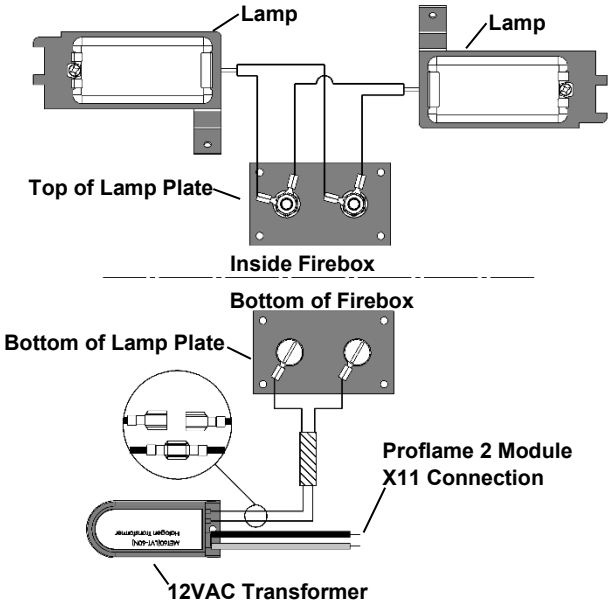

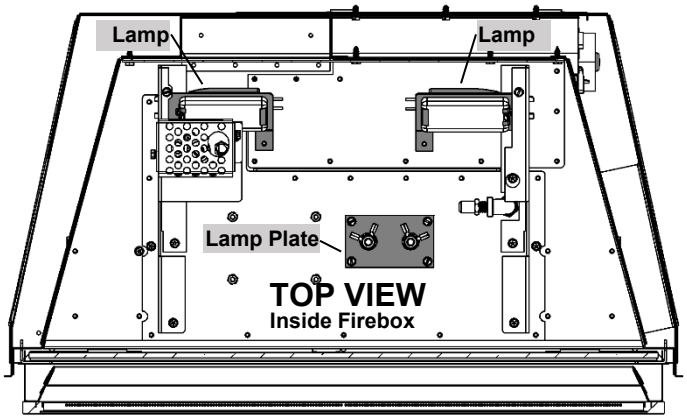

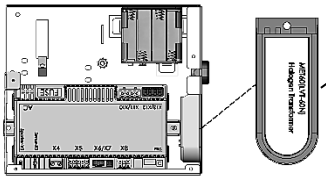

12VAC Transformer is inside Component Box

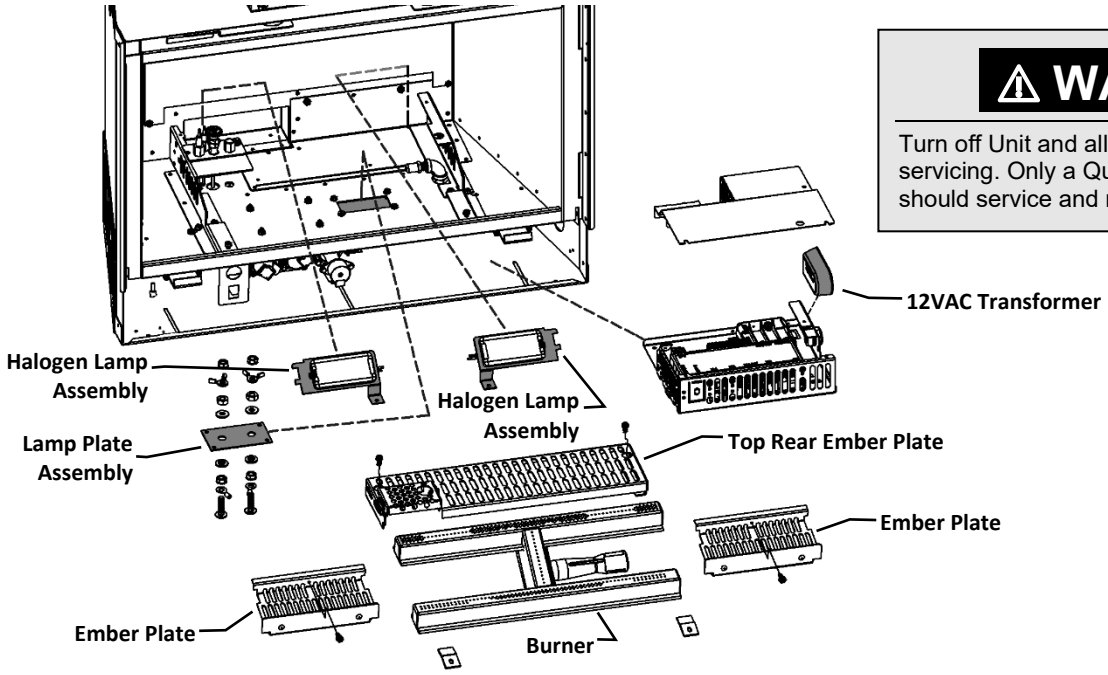

⚠ WARNING

Turn off Unit and allow to cool before servicing. Only a Qualified service technician should service and repair this appliance.

IDV24 Glass Door Information

Glass Cleaning: During normal startup condensation will form, causing dust and lint to cling to the surface of the glass. A commercial fireplace glass cleaner can be used two or three times a season, depending on use of the appliance.

⚠ WARNING AND CAUTIONS

- Do not clean when the glass is hot.
- Do not use abrasive cleaners.
- Using a substitute glass will void all product warranties.
- Do not strike or abuse glass. Care must be taken to avoid breakage of the glass.
- Do not operate this fireplace without the glass front or with a broken glass.

REPLACEMENT GLASS

Only Robax ceramic or coated NeoCeram glass may be used for replacement. The glass must be a minimum of 5mm thick.

⚠ WARNING:

No substitute materials may be used other than factory supplied components.

Spring Replacement: Over time the spring may need to be replaced if tension is lost. Replace spring as follows:

1. Remove the top latches by unfastening the two [2] hex screws that secures it in place. They are located in the firebox.
2. Remove the bottom latches by unfastening the four [4] hex screws located in the firebox (beside the burner assembly). Once the screws are all removed, the latches will either fall or slide out.
3. To remove the spring, unfasten the one [1] lock nut holding it in place. NOTE: When replacing a spring tighten the lock nut so that the total compression length is 3-1/2". This is critical for proper tension.

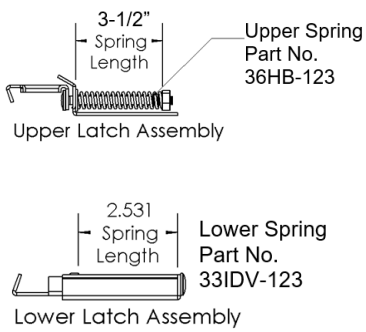

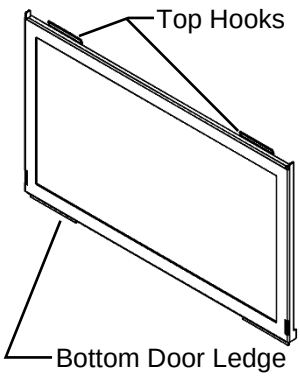

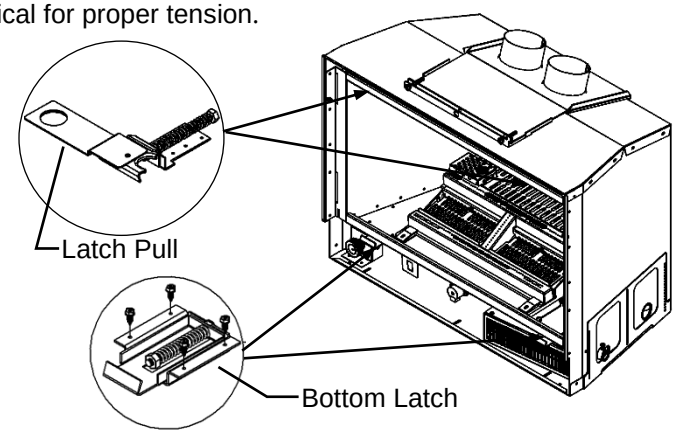

IDV24 Glass Door Removal and Installation

To Disengage Top Latch:

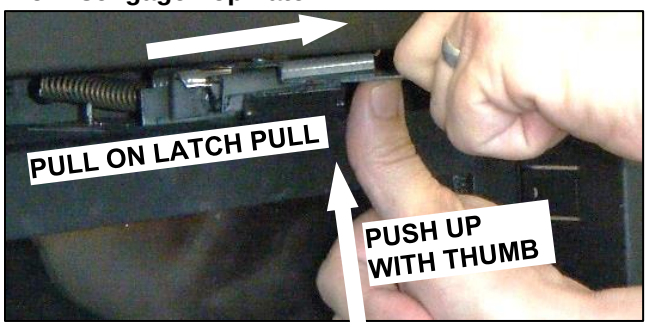

To Reinstall Glass Door:

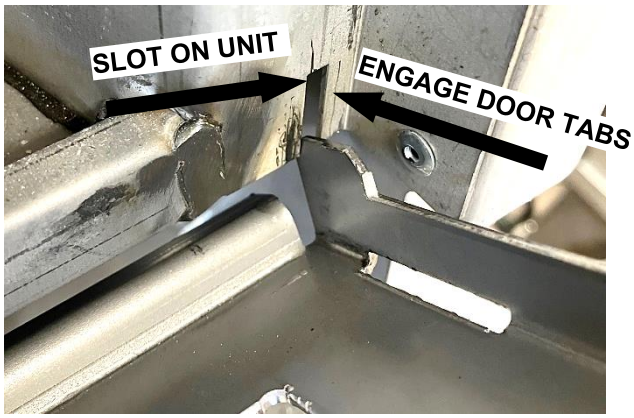

1. Disengage Top Latches by pulling on Latch Pull with one hand and pushing up on Latch Pull with the thumb of your other hand (See Photo to left).
2. Once the top of the door is unlatched, pull it outwards and up to unlatch the bottom.
3. To re-install, place the Bottom Door Ledge into the Lower Latch assembly first. Then swing the door closed to seal it against the firebox cavity.
4. To re-latch the Upper Latch assembly, Pull on Latch Pull with one hand and push up with other hand. Lift Latch over Door Hook and allow Latch Hook to drop down over the Door Hook.

TO REPLACE GLASS:

Clean all materials from door frame. Using a high heat silicone (resistant to 500°F [260°C]) apply a bead of approximately 1/8" to all four sides of frame and insert glass with new gasket. The door frame should be on a flat surface with a small amount of weight pressing the glass into the silicone. Let everything dry for approximately 15 to 20 minutes.

IDV24 Burner Removal

To remove Burner, remove Ember Plates and Burner Retainers.

Slide Burner slightly to the left to dislodge it from the Orifice and remove it from the fireplace.

Burner System shown removed for clarity only.

⚠ WARNING

Turn off Unit and allow to cool before cleaning. Only a Qualified service technician should service and repair this appliance.

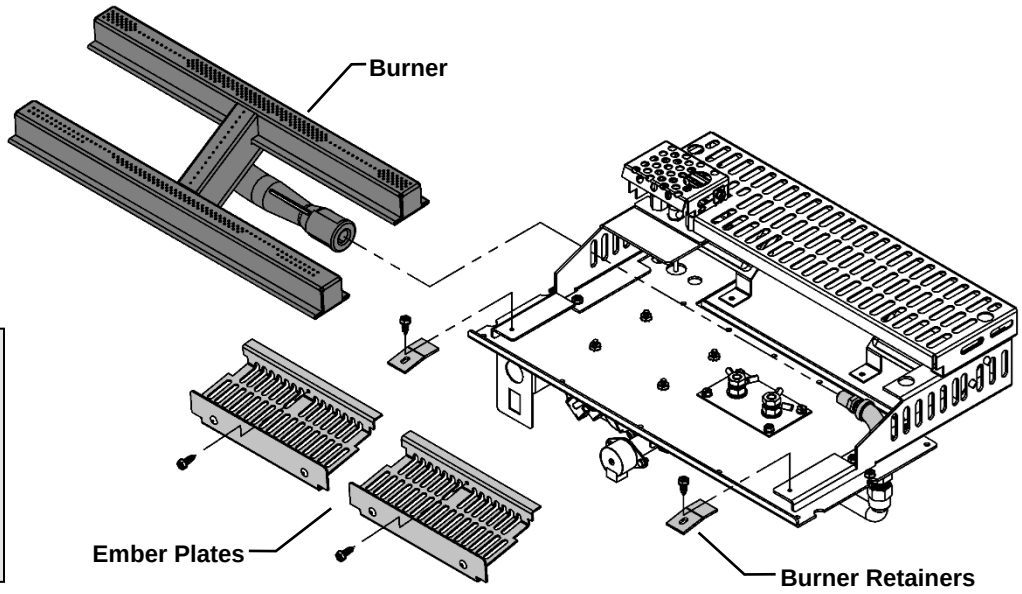

IDV24 Burner System Removal / Installation

Burner System Removal: Remove Burner System components as shown. Also remove Lamp Assemblies. Remove DT Screws around perimeter of Burner Pan. Carefully work the burner pan loose & lift the assembly upward to remove it from the firebox cavity. **Burner System Installation** is the reverse of these steps. Ensure that the mounting surface is clean. Use fresh **Black Mill Pac** to reseal the burner pan.

⚠ WARNING

Turn off Unit and allow to cool before cleaning. Only a Qualified service technician should service and repair this appliance.

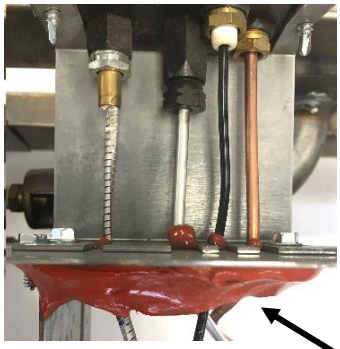

NOTE: Pilot connections through Burner Pan must be sealed with **Red Silicone**.

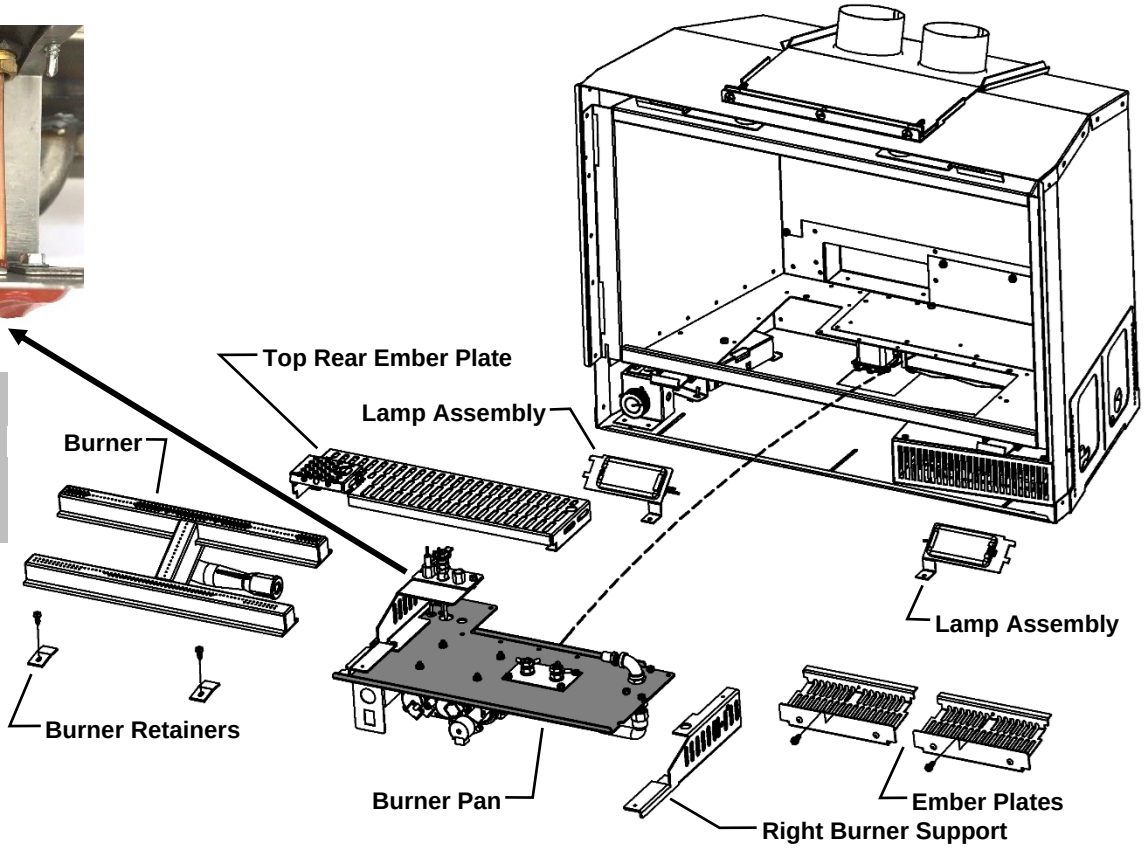

Burner System Maintenance

It is recommended to annually inspect and clean the Burner System to prevent malfunction and / or sooting. This operation should be performed by your dealer or a qualified technician.

⚠ -CAUTION-

Before servicing the burner system ensure that the gas supply is turned OFF and disconnect all electrical connections to the appliance. Allow the appliance to cool to room temperature. Note that the pilot assembly may be hot in an intermittent or standing-pilot system—even if the main burner was never on. Exercise caution when working within the area.

-ALL WORK SHOULD BE PERFORMED BY A QUALIFIED AND CERTIFIED TECHNICIAN-

Monthly Flame Inspection

It is recommended to turn on the unit at least once a month and inspect the flame pattern to ensure there are no problems with the burner tube (Flame should appear similar to the above picture).

The pilot flame should also be inspected monthly to ensure proper operation.

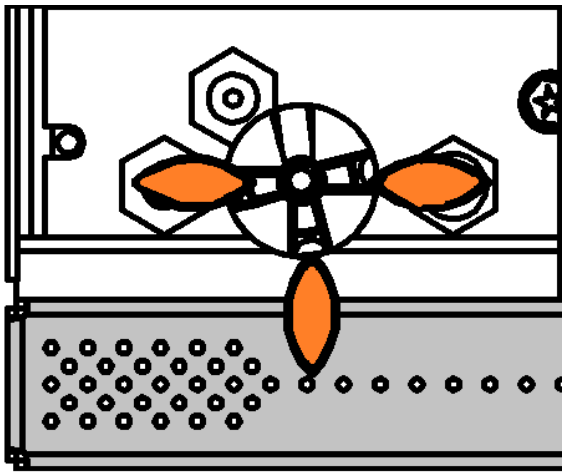

Pilot Must Maintain This Relationship With Burner.

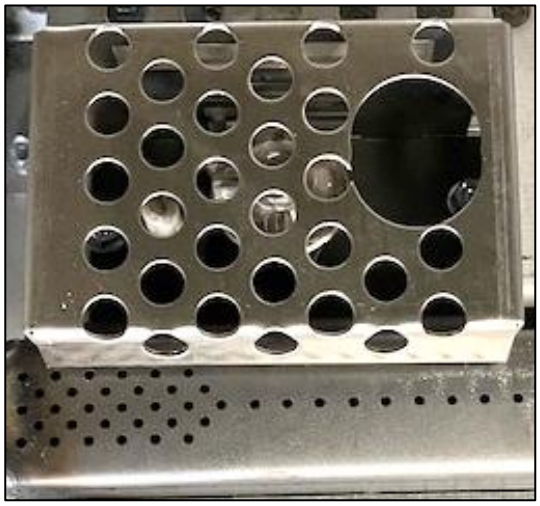

Pilot Area Must Not Be Covered.

*Pilot Shield should be visually inspected monthly for signs of deterioration due to flame exposure. Replace if necessary.

IDV24 -Gas Conversion Part A-

IDV24N, IDV24NE, IDV24NE2, IDV24LP, IDV24LPE, IDV24LPE2

Kit Number	Description	Pilot Orifice	Burner Orifice Brass (1000-255)	Brass Nipple	Air Shutter	Hi/Lo Regulator
24IDV-CKLP	Propane Conversion -Millivolt-	1001-P167SI **#30** (977.167)	#52	1000-P201VE Hex	Fully Open	1001-P202SI (0.907.202)
24IDV -CKNG	NG Conversion -Millivolt-	1001-P165SI **#51** (977.165)	#42	1000-253 Close	1/8”	1001-P201SI (0.907.201)
24IDV-CKLPI	Propane Conversion -IPI-	1001-P168SI **#35** (977.168)	#52	1000-P201VE Hex	Fully Open	1002-P014SI (0.907.014)
24IDV-CKNGI	NG Conversion -IPI-	1001-P166SI **#62** (977.166)	#42	1000-253 Close	1/8”	1002-P016SI (0.907.016)
24IDV-CKLP2	Propane Conversion -IPI-	1001-P168SI **#35** (977.168)	#52	1000-P201VE Hex	Fully Open	1002-P012SI (907.012)
24IDV-CKNG2	NG Conversion -IPI-	1001-P166SI **#62** (977.166)	#42	1000-253 Close	1/8”	1002-P013SI (907.013)
IMPORTANT: Always check for gas leaks with a soap and water solution. DO NOT USE OPEN FLAME FOR LEAK TESTING.						

Burner System shown removed for clarity only.

Parts List (SIT):
- HI/LO Pressure Regulator Assembly
- Burner Orifice
- Brass Nipple
- Instructions
- Conversion Kit Label
- Pilot Orifice

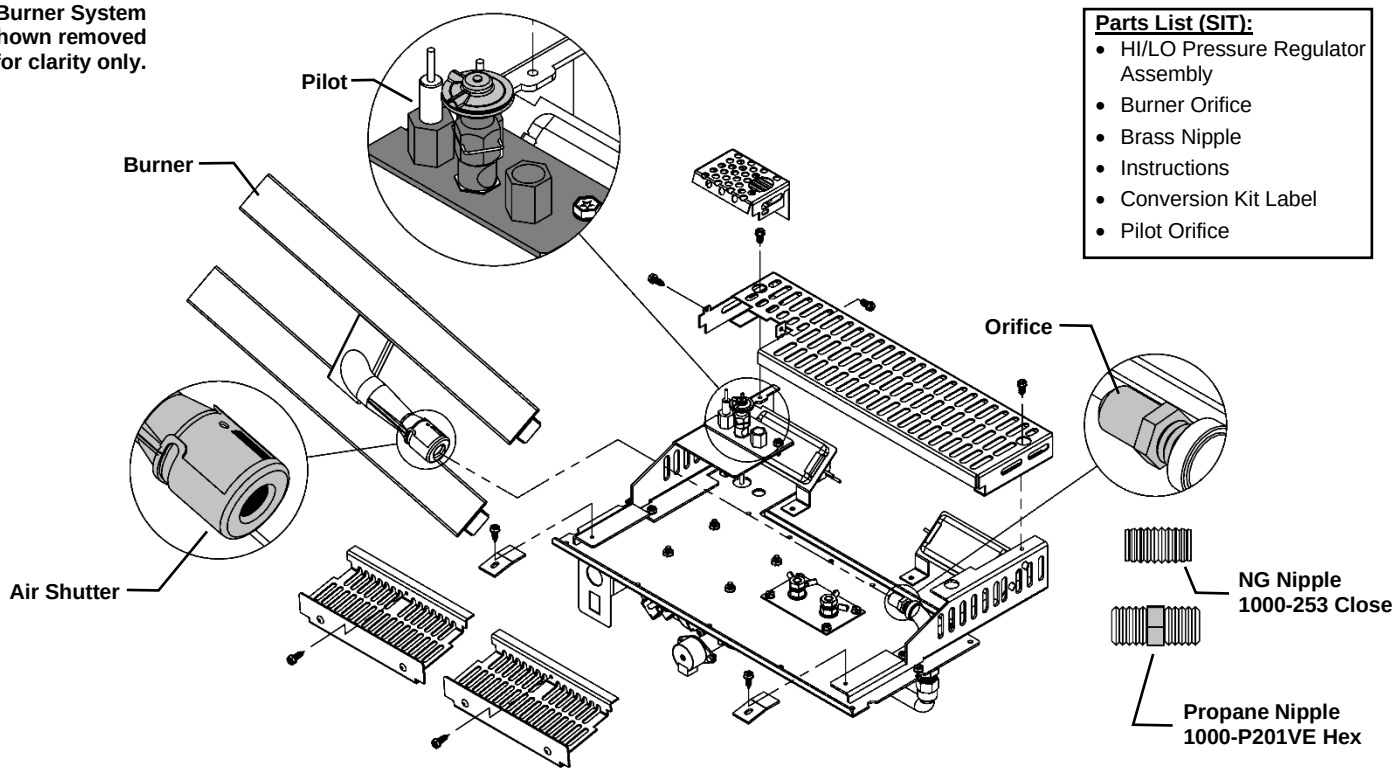

⚠ Caution:

The gas supply shall be shut off prior to disconnecting the electrical power, before proceeding with the conversion.

1. The Burner Tube must be removed from the Burner Pan Assembly (See **Burner Tube Removal**). Adjust the Air Shutter to the correct Primary Air setting as specified in the manual or on the label plate. To adjust the Primary Air setting, loosen screw on the side of the Air Shutter and rotate to the correct opening using a drill bit or tape measure. Retighten screw.
2. Remove the Main Orifice using a ½” wrench and replace with the new Conversion Orifice which came with the Conversion Kit.
3. Replace the Burner Tube. Install the new Pilot Orifice (See **Pilot Conversion**) and Hi/Lo valve regulator by following instructions supplied with the Conversion Kit.

- Refer to ***Gas Specifications Chart*** for inlet pressures and input ratings.
- Clock meter to verify input rate.
- Place conversion label as close to converted gas control as possible.
- Refer to ***lighting instructions*** to verify the normal operating sequence of the ignition system.
- Refer to ***Burner System Maintenance*** for proper relationship of the pilot flame to the main burner and for main burner flame appearance.

-⚠ Warning-

This conversion kit shall be installed by a qualified service agency in accordance with the manufacturer's instructions and all applicable codes and requirements of the authority having jurisdiction. If the information in these instructions is not followed exactly, a fire, explosion or production of carbon monoxide may result causing property damage, personal injury or loss of life. The qualified service agency is responsible for the proper installation of this kit. The installation is not proper and complete until the operation of the converted appliance is checked as specified in the manufacturer's instructions supplied with the kit.

Gas Conversion for Top Convertible Pilot – Part B (series 0190XYZ)

Instructions for converting SIT 190 series pilot burner injector from NG to PROPANE and from PROPANE to NG only. This information should be considered as supplemental to the Appliance Manufacturer's Instructions.

WARNING! The installation of this conversion kit must only be undertaken by a qualified and certified gas appliance installer.

1. Shut-off the gas supply to the appliance.
2. Allow the pilot burner to cool to room temperature.

   WARNING: Touching a hot pilot burner can result in injury.

3. The pilot hood is held in place by spring. First remove the spring, then remove the hood by pulling it up from the pilot bracket (fig. 1).
4. Insert a 5/32" or 4 mm Allen wrench into the hexagonal key-way of the injector (fig. 2), and rotate it counter-clockwise until it is free of the injector journal.
5. Verify that the new injector is proper for the application. The injector size is stamped on the side of the injector near the top. Propane injectors have a groove machined around their circumference near the top, while NG injectors do not have a groove (fig. 4). Refer to the Appliance Manufacturer's instruction sheet for the proper injector size.
6. Insert the Allen wrench into the end of the injector. Then, insert the injector into injector journal, and rotate the injector clockwise until a torque of 9 lbf in (1.0 Nm) is achieved.
7. First replace the pilot hood by aligning the tab on the base of the hood with the slot in the side of the pilot journal, and push the hood down, onto the pilot bracket (fig. 3). The hood must sit squarely on the bracket for proper operation. Then replace the spring by pushing it on his seat (fig.3). Check to insure that the hood is properly seated onto the pilot bracket and that the spring is properly inserted onto his seat.
8. Restore the gas supply to the appliance, and ignite the pilot burner. Verify proper ignition and operation.

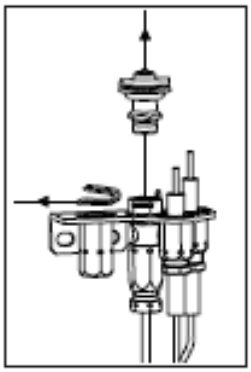

fig. 1

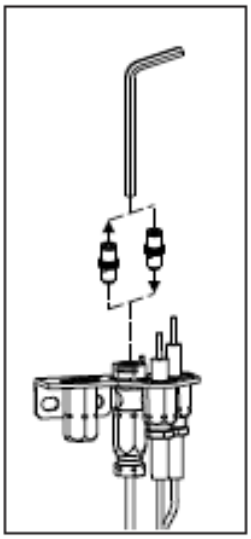

fig. 2

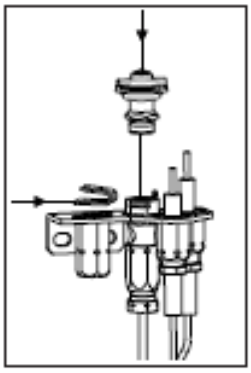

fig. 3

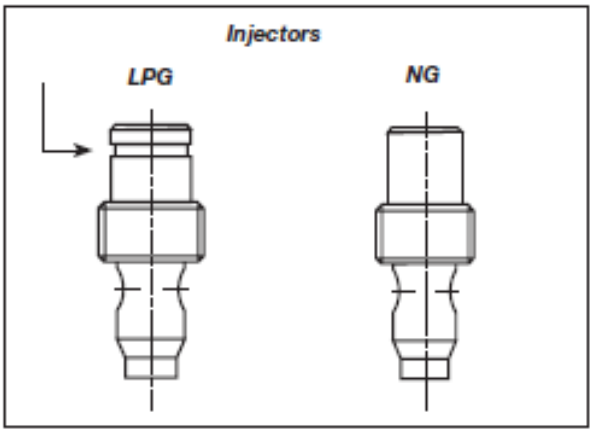

fig. 4

WARNING!

This conversion kit must ONLY be applied as part of a conversion kit supplied by the APPLIANCE MANUFACTURER for the specific appliance, and type of gas, being converted.

installationinstructions

7.252.136

820 NOVA mV

Modulating Conversion Kit

WARNING!
The installation of this conversion kit must only be undertaken by a qualified and certified gas appliance installer.

MODULATING PRESSURE REGULATOR CONVERSION KIT INSTALLATION OR REPLACEMENT INSTRUCTIONS.

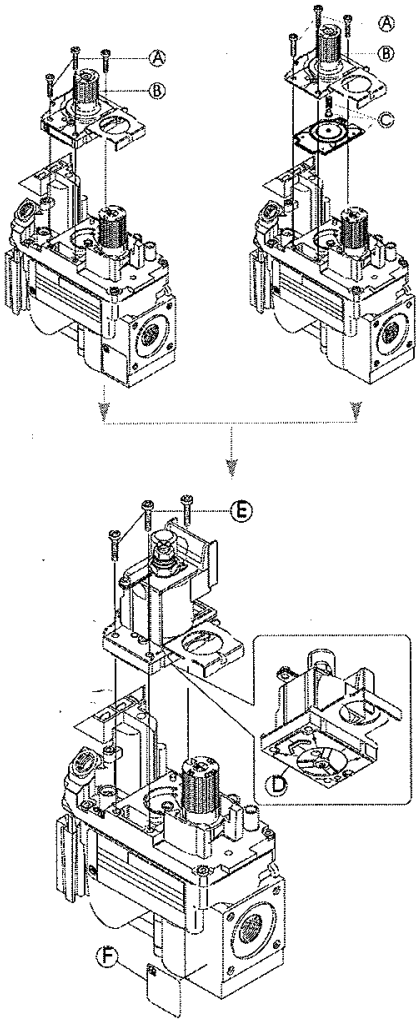

1. *Turn control knob to the OFF position, and shut off the gas supply to the valve.*

2. *Using a Torx T20, or slotted screwdriver, remove and discard the three pressure regulator mounting screws (A), pressure regulator tower (B), and the spring and diaphragm assembly (C). (If applicable)*

3. *Insure that the rubber gasket (D) is properly positioned and install the new modulating pressure regulator assembly to the valve using the new screws (E) supplied with the kit. Tighten screws securely. (Reference torque = 25 In.Lb.)*

4. *Install the enclosed identification label (F) to the valve body where it can be easily seen.*

5. *Apply gas to system and re-light appliance according to manufacturers instructions.*

6. *With the main burner "ON", test the new pressure regulator assembly for leaks using a soap solution.*

7. *Relight the main burner in both the HI and LO positions, and verify proper burner ignition and operation.*

WARNING!
This modulating conversion kit must ONLY be applied as part of a conversion kit supplied by the APPLIANCE MANUFACTURER for the specific appliance, and type of gas, being converted.

INSTALLER NOTICE. These instructions must be left with appliance.

SIT Group

Gas Line Installation

This gas appliance should be installed by a qualified installer in accordance with local building codes and with current CAN/CSA - B149.1 installation codes for Gas Burning appliances and equipment in Canada and the National Fuel Gas Code ANSI Z223 in the U.S.A.

State of Massachusetts

For the state of Massachusetts a T-handle gas shut-off valve must be used on a gas appliance. This T-handle gas shut-off valve must be listed and approved by the state of Massachusetts. This is in reference to the state of Massachusetts state code CMR238.

1. The gas pipeline can be brought in through either the right or left side of the appliance. Knockouts are provided at these locations to allow for the gas pipe installation and testing of any gas connection.
2. The gas control inlet is 3/8” NPT. Typical installation layout for rigid pipe is shown at right.
3. When using copper or flex connector, use only approved fittings. Always provide a union so that gas line can be easily disconnected for burner or fan servicing. See gas specification for pressure details and ratings.
4. When a vertical section of gas pipe is required for the installation, a condensation trap is needed. See CAN/CSA-B149.1 for code details.
5. For natural gas, a minimum of 3/8” iron pipe with gas minimum pressure of 5.5” w.c. must be used for supply from the gas meter. Consult with the local gas utility if any questions arise concerning pipe sizes.

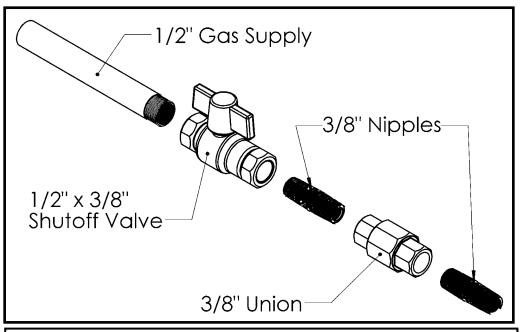

Shutoff valves installed in tubing systems shall be rigidly and securely supported independently of the tubing.

6. Ports are accessible for test gauge connection both on the inlet and outlet of the gas valve.
7. Turn the gas supply ON and check for leaks. DO NOT USE OPEN FLAME FOR THIS PURPOSE. Use an approved leak testing solution.
8. The appliance and its individual shutoff valve must be disconnected from the gas supply piping system during any pressure testing of that system at test pressures in excess of 1/2psig [3.5 kPa].
9. The appliance must be isolated from the gas supply piping system by closing its individual shutoff valve during any pressure testing of the gas supply piping system at test pressures equal to or less than 1/2psig [3.5 kPa].

Note: The gas line connection may be made of 1/2” rigid pipe, 1/2” copper pipe or an approved flex connector. Since some municipalities have additional local codes, it is always best to consult your local authorities and the current CAN/CSA - B149.1 installation code in Canada or the National Fuel Gas code ANSI Z223.1 in the U.S.A.

IMPORTANT: Check for gas leaks with a soap and water solution. DO NOT USE OPEN FLAME FOR LEAK TESTING.

Models	**IDV24N**	**IDV24LP**	**IDV24NE/NE2**	**IDV24LPE/LPE2**
Fuel	Natural Gas	Propane	Natural Gas	Propane
Gas Control	Millivolt Adjustable		IPI	
Maximum Input [BTU]	23,500 HI 16,500 LO	24,000 HI 20,000 LO	23,500 HI 16,500 LO	24,000 HI 20,000 LO
Orifice Size (0-4500ft)	#42	#52	#42	#52
Air Shutter	1/8”	Fully Open	1/8”	Fully Open
Gas Inlet Size	S.I.T. 820 Nova, 3/8” NPT			

Gas Supply Pressure	**Minimum**	**Normal**	**Maximum**
Natural Gas	5.5”	7”	9”
Liquid Propane	11”	11”	12”

Manifold Pressure High	3.5” w.c. [0.87kPa] **NG**	10” w.c. [2.61kPa] **LP**
Manifold Pressure Low	1.6” w.c. [0.40kPa]	6.3” w.c. [1.57kPa]

Millivolt System, Lighting, and Burner Control

FOR YOUR SAFETY READ BEFORE LIGHTING

WARNING: If you do not follow these instructions exactly, a fire or explosion may result causing property damage, personal injury or loss of life.

BEFORE LIGHTING

A This appliance has a pilot which must be lighted by hand. When lighting the pilot, follow these instructions exactly.

B Smell all around the appliance area for gas. Be sure to smell next to the floor because some gas is heavier than air and will settle on the floor.

WHAT TO DO IF YOU SMELL GAS

- Do not try to light an appliance.
- Do not touch any electrical switch; do not use any phone in your building.
- Immediately call your gas supplier from a neighbour's phone. Follow the gas supplier's instructions.
- If you cannot reach your gas supplier, call the fire department.

C Use only your hand to push or turn the gas control knob. Never use tools. If the knob will not push in or turn by hand, don't try to repair it. Call a qualified technician. Force or attempted repair may result in a fire or explosion.

D Do not use the appliance if any part has been under water. Immediately call a qualified service technician to inspect the appliance and to replace any part of the control system which has been under water.

LIGHTING INSTRUCTIONS

1. Stop! Read the safety information above this label.
2. Set the thermostat to lowest setting.
3. Turn off all electrical power to the appliance.
4. Locate valve under the burner assembly.
5. If the control knob is not already in the off position, i.e. the word "OFF" in the 9 o'clock position, then push in the gas control knob slightly and turn ↻ clockwise to "OFF". NOTE: Knob cannot be turned from "PILOT" to "OFF" unless knob is pushed in slightly. Do not use force.
6. Wait five [5] minutes to clear out any gas. If you then smell gas. STOP! Follow "B" in the safety information above on this label. If you don't smell gas then go to the next step.
7. Now push in the control knob slightly and turn ↺ counter-clockwise to the "PILOT" position.
8. Push in the control knob all the way and hold it. With the other hand push in the red igniter button until you hear a click. Now observe closely the pilot burner located on the rear center-left hand side of the main burner. If a flame has appeared then continue to depress the control knob for 20 seconds. If the flame did not appear then continue to depress the red igniter button every 5 seconds until a flame is established. NOTE: If after 30 seconds a flame has not yet been established then turn the control knob back to the off position and repeat steps 5, 6 & 7.
9. Once the pilot has been established hold the control knob in the depressed position for approximately 25 seconds before releasing. If the flame goes out then repeat steps 7 and 8.
   - If the knob does not pop up when released, stop and immediately call your service technician or gas supplier.
   - If the pilot will not stay lit after several tries, turn the gas control to "OFF" and call your service technician.
10. Now turn the control knob to the "ON" position. The burner will not light unless the wall switch thermostat or remote control is turned "ON" or in the case of the thermostat there is a call for heat.
11. Close the access door and turn all electrical power back to the appliance.

TO TURN OFF THE APPLIANCE

1. Set the thermostat to lowest setting.
2. Turn off all electric power to the appliance if service is to be performed.
3. Open the control access door.
4. Push in the gas control knob slightly and turn ↻ clockwise to the "OFF" position. Do not force.
5. Replace control access panel.

NOTE: Only one on/off device (manual on/off, remote control, or hard wired thermostat) should be connected to the appliance at any one time, this is most important when installing an insert or stove as the on/off rocker switch is installed at the factory.

Recommended Maximum Lead Length (Double Wire)
When Using Wall Switch or Thermostat

Wire Size	Max. Length
14ga	100ft [30.4m]
16ga	64ft [19.5m]
18ga	40ft [12.1m]
20ga	25ft [7.6m]
22ga	15ft [4.5m]

CAUTION: DO NOT WIRE 120V POWER TO MILLIVOLT SWITCHES OR THERMOSTAT.

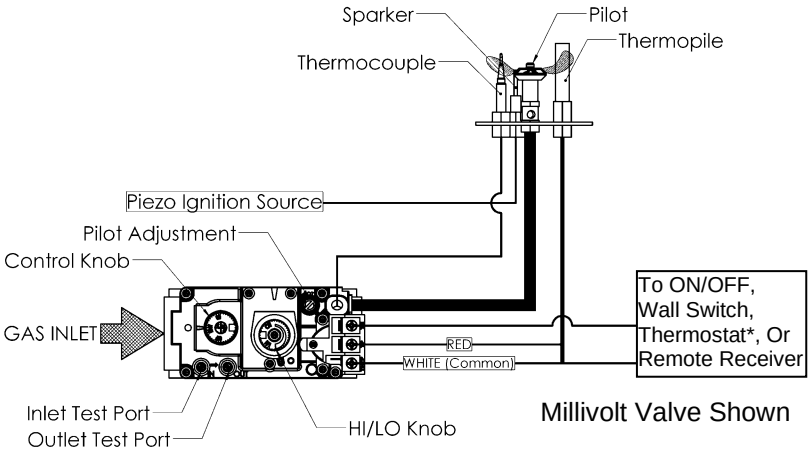

Millivolt Valve Shown

- Lighting Instructions for Millivolt Valve with 7 Day Timer -

FOR YOUR SAFETY READ BEFORE LIGHTING

WARNING: If you do not follow these instructions exactly, a fire or explosion may result causing property damage, personal injury or loss of life.

A. This appliance has a pilot which must be lighted by hand. When lighting the pilot, follow these instructions exactly.

B. **BEFORE OPERATING** smell around the appliance area for gas. Be sure to smell next to the floor because some gas is heavier than air and will settle on the floor.

WHAT TO DO IF YOU SMELL GAS

- Do not try to light any appliance.
- Do not touch any electric switch; do not use any phone in your building.
- Leave the building immediately.
- Immediately call your gas supplier from a neighbor's phone. Follow the gas supplier's instructions.
- If you cannot reach your gas supplier, call the fire department.

C. Do not use this appliance if any part has been under water. Immediately call a qualified service technician to inspect the appliance and replace any part of the control system and any gas control which has been under water.

D. Use only your hand to push in or turn the gas control knob. Never use tools. If the knob will not push in or turn by hand, do not try to repair it; call a qualified service technician. Force or attempted repair may result in a fire or explosion.

OPERATING INSTRUCTIONS

1. **Stop!** Read the safety information above on this label.
2. This appliance is equipped with an on-demand pilot that shuts off after 7 days.
3. Set the thermostat to lowest setting.
4. Turn off all electric power to the appliance.
5. Locate valve under the burner assembly.
6. If the control knob is not already in the off position, i.e. the word "OFF" in the 9 o'clock position, then push in the gas control knob slightly and turn ↻ clockwise to "OFF". NOTE: Knob cannot be turned from "PILOT" to "OFF" unless knob is pushed in slightly. Do not use force.

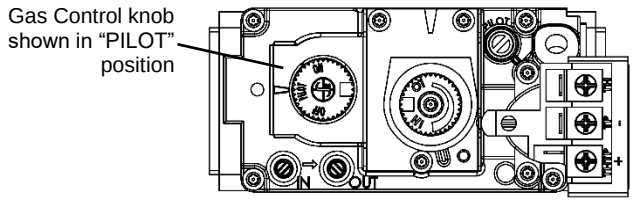

7. Wait five (5) minutes to clear out any gas. Then smell for gas, including near the floor. If you smell gas, STOP! Follow "B" in the safety information above this label. If you do not smell gas, go to next step.
8. Now push in the control knob slightly and turn ↺ counter-clockwise to the "PILOT" position.
9. Push in the control knob all the way and hold it. With the other hand push in the red igniter button until you hear a click. Now observe closely the pilot burner located on the rear center-left hand side of the main burner. If a flame has appeared then continue to depress the control knob until a BEEP is heard. This procedure may take up to TWO MINUTES.
10. If the pilot flame did not appear then continue to depress the red igniter button every 5 seconds until a flame is established. NOTE: If after 30 seconds a flame has not yet been established then turn the control knob back to the off position and repeat steps 7, 8, and 9.
11. Once the pilot has been established hold the control knob in the depressed position for approximately 25 seconds before releasing. If the flame goes out then repeat steps 9 and 10.
    - If the knob does not pop up when released, stop and immediately call your service technician or gas supplier.
    - If the pilot will not stay lit after several tries, turn the gas control to "OFF" and call your service technician.
12. Now turn the control knob to the "ON" position. The burner will not light unless the wall switch thermostat or remote control is turned "ON" or in the case of the thermostat there is a call for heat.
13. Close the access door.
14. Turn on all electric power to the appliance.
15. Set thermostat to desired setting.
16. If the appliance will not operate, follow the instructions "To Turn Off Gas To Appliance" and call your service technician or gas supplier.

TO TURN OFF GAS TO APPLIANCE

1. Set thermostat to lowest setting.
2. Turn off all electric power to the fireplace if service is to be performed.
3. Open the control access door.
4. Push in the gas control knob slightly and turn ↻ clockwise to the "OFF" position. Do not force.
5. Close the control access door.

- IPI LIGHTING INSTRUCTIONS -

FOR YOUR SAFETY READ BEFORE LIGHTING

WARNING: If you do not follow these instructions exactly, a fire or explosion may result causing property damage, personal injury or loss of life.

A. This appliance is equipped with an ignition device which automatically lights the pilot. Do not try to light the pilot by hand.

B. **BEFORE OPERATING** smell around the appliance area for gas. Be sure to smell next to the floor because some gas is heavier than air and will settle on the floor.

WHAT TO DO IF YOU SMELL GAS

- Do not try to light any appliance.
- Do not touch any electric switch; do not use any phone in your building.
- Immediately call your gas supplier from a neighbor's phone. Follow the gas supplier's instructions.
- If you cannot reach your gas supplier, call the fire department.

C. Do not use this appliance if any part has been under water. Immediately call a qualified service technician to inspect the appliance and replace any part of the control system and any gas control which has been under water.

D. If the gas valve requires repair, call a qualified service technician. Force or attempted repair may result in a fire or explosion.

OPERATING INSTRUCTIONS

1. Stop! Read the safety information above on this label.
2. Read the owner's manual including the section on "Remote Control" operation if applicable.
3. Turn off all electric power to the appliance.
4. This appliance is equipped with an ignition device which automatically lights the pilot. Do not try to light the pilot by hand.

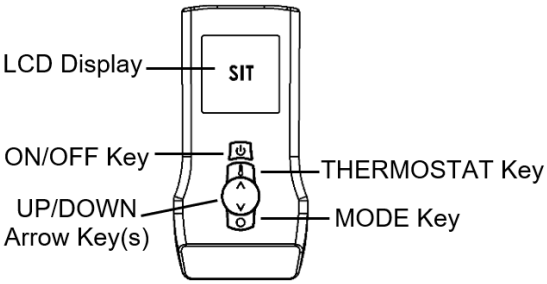

5. Wait five (5) minutes to clear out any gas. Then smell for gas, including near the floor. If you smell gas, STOP! Follow "B" in the safety information above this label. If you do not smell gas, go to next step.
6. Turn on all electric power to the fireplace.
7. Turn "On" Switch that operates the Main Burner. For **Remote Control** units, press the ON/OFF key on the remote control. "ON" will be displayed on the LCD display and a "beep" will be heard at the unit to indicate the command has been received.
8. If the appliance will not operate, follow the instructions "To Turn Off Gas To Appliance" and call your service technician or gas supplier.

TO TURN OFF GAS TO APPLIANCE

1. Set thermostat to lowest setting. For **Remote Control** units, press the ON/OFF key on the remote control. "OFF" will be displayed on the LCD display and a "beep" will be heard at the unit to indicate the command has been received.
2. Turn off all electric power to the fireplace if service is to be performed.

Annual Inspection List for Determining Safe Operation of a Direct Vent Gas Fireplace

Refer to this checklist for proper maintenance, safe use, and operation.

See each section for more specific information.

1. Inspect and operate all pressure relief mechanisms (i.e., relief dampers, spring loaded door latches) installed on your appliance to verify relief mechanisms are free from obstruction to operate.

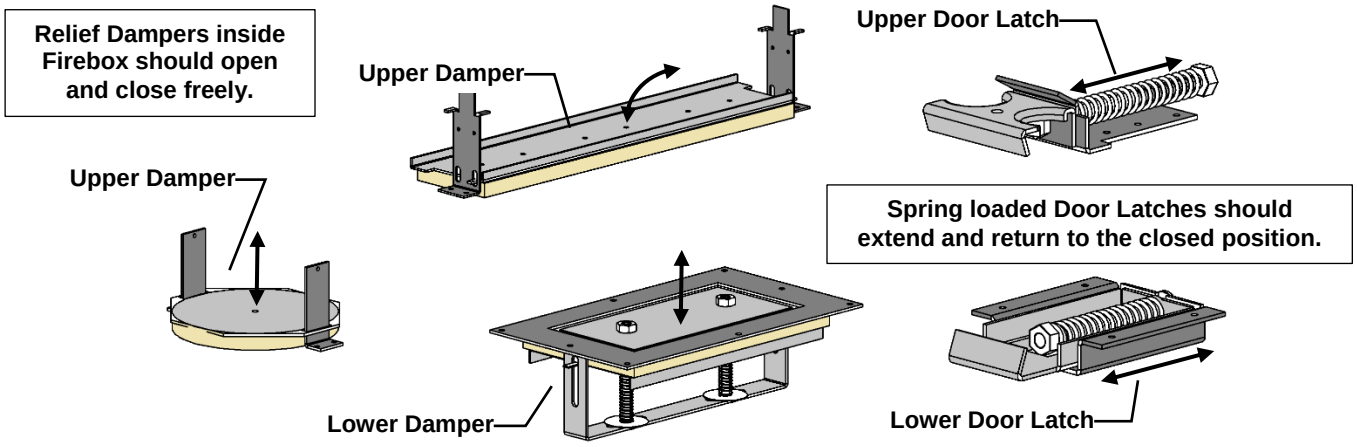

2. Clean glass window with a suitable fireplace glass cleaner. Abrasive cleaners must not be used. Be careful not to scratch the glass when cleaning.

3. Inspect the operation of the Pilot. Ensure that it is working properly.

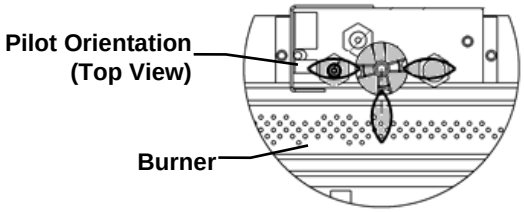

4. Inspect and ensure the lighting of the main burner occurs within 4 seconds of the main gas valve opening. Visual inspection should match that outlined in the appliance instruction manual (refer to ***Monthly Flame Inspection***). Inspect primary air openings for blockage.

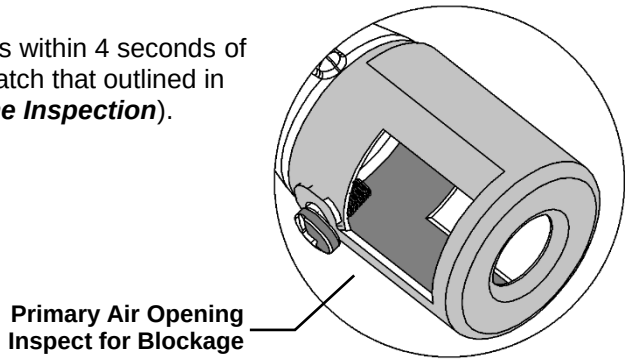

5. Inspect condition of vent and vent terminal for sooting or obstruction and correct if present.

6. Vacuum and clean any debris in the firebox that is not supposed to be there.

7. Test and measure the flame failure response time of the flame safety system. It must de-energize the safety shutoff in no more than 30 seconds.
Procedure for Millivolt Units: Turn on fireplace for 5 minutes. Shut off fireplace while listening to valve. A "click" should be heard within 30 seconds. This indicates the safety shutoff is working properly.

Procedure for IPI Units: Turn on fireplace and allow main burner to come on. Then disconnect Flame Sense wire from IPI Module (X3 Connection). The fireplace should shut down immediately.

8. Check all accessible gas-carrying tubes, connections, pipes and other components for leaks.

Troubleshooting the Gas Control System

⚠ WARNING

BEFORE DOING ANY GAS CONTROL SERVICE WORK, REMOVE THE GLASS FRONT.
NOTE: Before troubleshooting the gas control system, be sure external gas shut off is in the "On" position.

Problem	Possible Causes	Corrective Action
Spark igniter will not light.	Defective or misaligned electrode at pilot.	Check for spark at electrode and pilot: if no spark and electrode wire is properly connected, replace igniter.
	Defective igniter (push-button).	Using a match, light pilot. If pilot lights, turn off pilot and push the red button again. If pilot will not light - check gap at electrode and pilot should be 1/8" to 1/4" to have a strong spark.
Pilot will not stay lit after carefully following lighting instructions.	Defective thermocouple (flame switch where applicable).	Check pilot flame. Must impinge on generator and thermocouple. Clean and/or adjust pilot for maximum flame impingement on generator and thermocouple. Replace thermocouple if pilot will not hold. (Hand tight 1/8 turn on replacement)
	Defective valve magnet.	Replace valve, if pilot won't hold after the thermocouple is replaced.
Pilot burning, no gas to burner, valve knob “ON”, and wall switch “ON”.	Wall switch or wires defective.	Check wall switch and wires for proper connections. Jumper wire across terminals at wall switch. If burner comes on, replace defective wall switch. If okay, jumper wires, across wall switch wires at valve. If burner comes on, wires are faulty or connections are bad.
	Generator may not be generating sufficient voltage.	Check generator with millivolt meter. Take reading at generator terminals of gas valve. Should read 325 millivolts minimum while holding valve knob depressed in pilot position and wall switch "off" Replace faulty generator if reading is below specified minimum.
	Plugged burner orifice.	Check burner orifice for stoppage and remove.
	Defective automatic valve operator.	Remove wall switch wires from gas valve. Install jumper wires from top bottom terminals of gas valve. Turn valve on "ON". If main burner does not light, replace valve.
Frequent pilot outage problem.	Pilot flame may be too low or blowing (high) causing the pilot safety to drop out.	Clean and/or adjust pilot flame for maximum flame impingement on generator and thermocouple. *See NOTE below – Seven Day Timer
Flame lifts off burner and goes out in less than 30 seconds.	Inner 4” liner has come off flue or termination, flame is starving for oxygen.	Attach 4" liner to flue or termination using screws, silicone and clamps as stated in manual.
Flame lifts off burner on one side while the rest of the flame remains lit.	Improper installation of firebrick. Firebrick is likely leaning.	Be sure to position firebrick against firebox walls and be sure to use brick clips attached to the inner side of firebox.

***NOTE:** The pilot system for this appliance may be equipped with a **Seven Day Timer**, in which case the pilot flame will be extinguished if the main burner has not been turned ON for seven days.

This Seven Day Cycle is reset every time the main burner is cycled ON / OFF and the pilot remains lit.

If more than seven days has passed since the main burner has been cycled ON / OFF and the pilot is also out, follow the procedures described in this manual to light the pilot.

NOTE: MILLIVOLT UNITS WITH 7 DAY TIMER – When lighting pilot, the Pilot Knob must be pressed until a **BEEP** is heard. This procedure may take up to **TWO MINUTES.**

Overview

The IPI system is an advanced burner controller that provides you with the option of having either a Standing-Pilot, or an intermittent igniting system. This alternating mode is controlled by the CPI/IPI Switch (Continuous Pilot Ignition/Intermittent Pilot Ignition) located on the IPI System Box. The difference between a Standing-Pilot and an Intermittent-Pilot is in whether the pilot stays lit or shuts off:

In Standing-Pilot, the pilot assembly is lit by the IPI Main Module and continues to stay lit until 1) the CPI/IPI Switch is switched to the IPI position; 2) a loss of electrical power (battery and AC source), 3) the flame sensor loses its signal, 4) the fuel supply discontinues, or 5) the IPI Main Module malfunctions.

In the Intermittent-Pilot mode, the pilot shuts off when the appliance is not in use. The advantage of this mode is that fuel is not consumed when the fireplace is not operating.

NOTE: In some jurisdictions Intermittent-Pilot is required. That means the pilot cannot remain lit when the appliance is not operating.

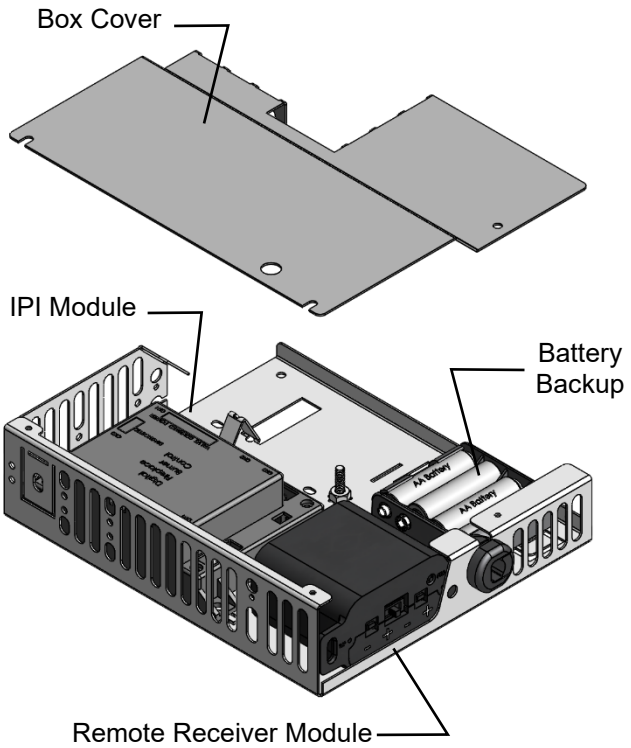

Components

The core of the IPI system is the Main Module and the IPI Valve. With these two components the system is able to operate a gas fireplace. There are also other components available to complement the IPI system.

IPI System Cover: Is essential in keeping the components at their proper operating temperatures. **DO NOT OPERATE THE APPLIANCE WITHOUT THIS COVER.**

Modulating Servo Motor: Is an add-on valve component that permits HI/LO functionality to be controlled by the remote. Contrary to this feature is a Manual HI/LO Control Knob. The Modulating Servo Motor requires the Remote system to be present.

Backup Battery Pack: This component permits the IPI system to operate without the need for an external AC Adapter power source. The advantage to using the battery backup is that in the case of a power failure, the appliance is still operable.

NOTE: In certain instances the IPI Main Module requires resetting. This can occur if the system is unable to ignite the pilot or the main burner in the allotted time period. The IPI is programmed to lockout all commands. To reset this lockout you must deplete the system of all electrical power. This means to remove the batteries from the Battery Pack, remove the batteries from the Remote Receiver (if applicable), and disconnect the AC Adapter from the system. Leave the power off for approximately 25 seconds to clear its lockout.

Remote Receiver: This component provides the capability of controlling the appliance with a wireless remote transmitter.

Standing Pilot Mode for Colder Climates (Below Freezing)

For IPI models it may be necessary to set the appliance to Standing Pilot mode to maintain heat in the cavity. The purpose of this procedure is to prevent cold air from penetrating the chimney and then onto the living space. Therefore, when the internal temperature is slightly elevated the fireplace is able to freely exhaust its combustion and hence making it easier to startup.

Standing Pilot Mode for Colder Climates (Below Freezing)

For IPI models it may be necessary to set the appliance to Standing Pilot mode to maintain heat in the cavity. The purpose of this procedure is to prevent cold air from penetrating the chimney and then onto the living space. Therefore, when the internal temperature is slightly elevated the fireplace is able to freely exhaust its combustion and hence making it easier to startup.

NOTE: The pilot system for this appliance may be equipped with a Seven Day Timer, in which case the pilot flame will be extinguished if the main burner has not been turned ON for seven days. This Seven Day Cycle is reset every time the main burner is cycled ON / OFF and the pilot remains lit. If more than seven days has passed since the main burner has been cycled ON / OFF and the pilot is also out, follow the procedures described in this manual to light the pilot.

IPI Electronic Ignition System

NOTE: The Remote Receiver module can also be located outside of the appliance to a maximum of 6ft away installed in a certified deep wall switch electrical box (2-3/4" depth). For this configuration an extension wiring harness (P/N: 1001-P904SI) is required.

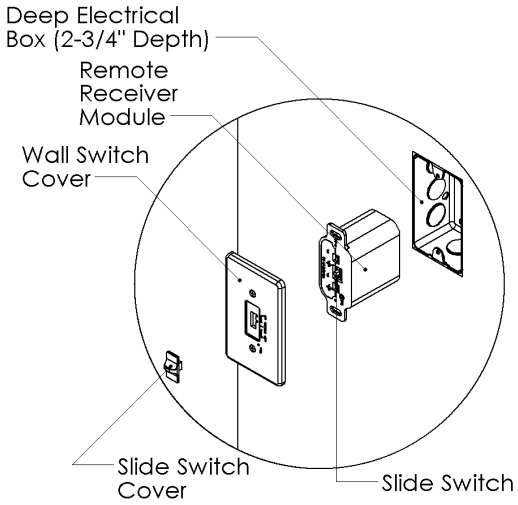

Electrical Supply in Series: The entire IPI system can be powered by a single power source (i.e. by the AC Adapter). This is advantageous if you do not want to supply extra batteries. To achieve this simply connect the AC Adapter into the Remote Control wiring harness instead of the main IPI harness. From the Remote wiring harness, use its male plug-in connector and connect it to the female plug-in in the main IPI harness. Now the circuit is complete. So the way it works is that electrical power is supplied to the Remote Receiver module and then proceeds to the Main IPI module. Furthermore, note that a Backup Battery Pack is not required in this configuration. Instead, batteries in the Remote Receiver act as the backup supply.

Junction Box Location

The electrical junction box must be located inside the existing firebox.

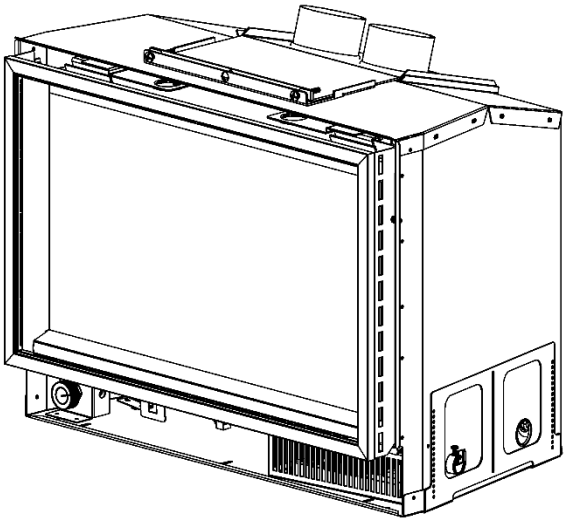

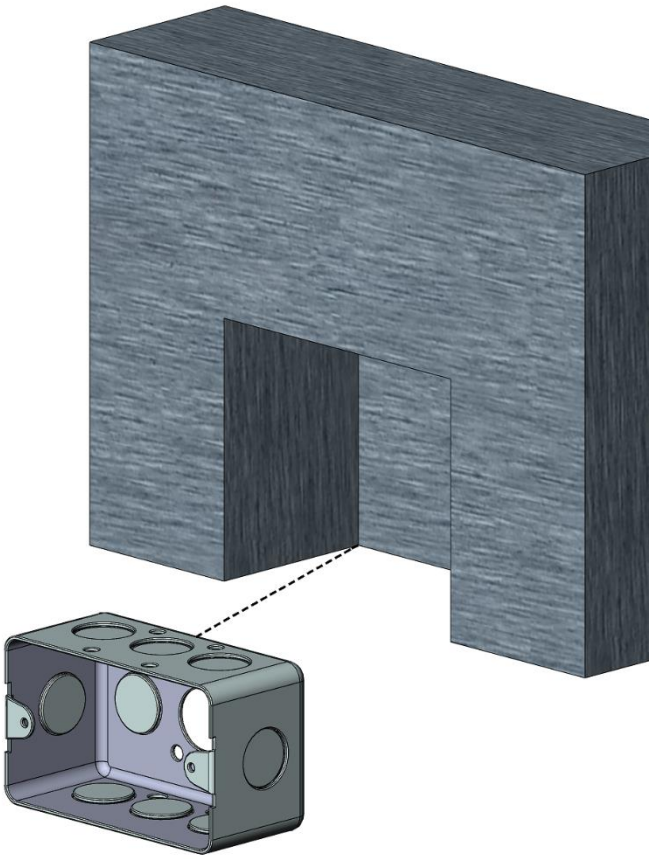

IPI Proflame 1 -Remote Control Operation-

The Proflame GTM is configured to control the on/off main burner operation, its flame levels, and provides on/off and Smart *thermostatic control of the appliance.

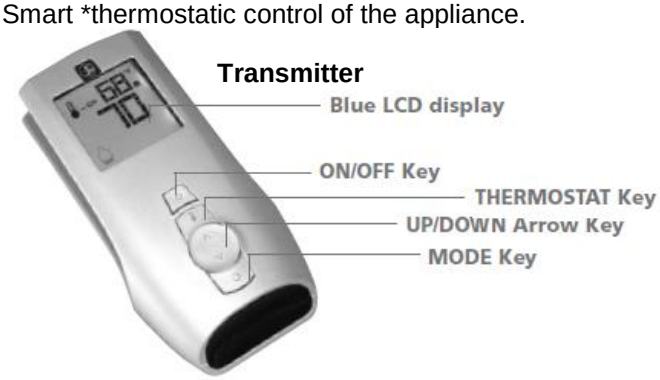

Remote Receiver

Transmitter
The Transmitter is powered by 3 AAA type batteries. A Mode Key is provided to Index between the features and a *thermostat Key is used to turn on/off or index through *thermostat functions

Remote Receiver
The Receiver connects directly to the gas valve and stepper motor with a wiring harness. The Receiver is powered by 4 AA type batteries. The Receiver three position slider switch can be set to one of three positions: ON (Manual Override), Remote (Remote control) or Off.

Initializing the System for the first time
Install 4 AA batteries into the receiver battery bay. Install 3 AAA type batteries in the Transmitter battery bay.
Place the 3 position slider switch in the “Remote” position. Insert the end of a paper clip into the hole marked “PRG” on the Receiver front cover. The Receiver will “beep” three (3) times to indicate that it is ready to synchronize with a Transmitter. Push the On button. The Receiver will “beep” four times to indicate the Transmitter’s command is accepted. The system is now initialized.

Temperature indication Display
With the system in the “OFF” position, press the *thermostat Key and the Mode Key at the same time. Look at the LCD screen on the Transmitter to verify that a C or F is visible to the right of the Room Temperature display.

Turn the Appliance On or Off
Press the ON/OFF Key on the Transmitter

Remote Flame Control
The Proflame GTM has six (6) flame levels. Pressing the Down Arrow Key once will reduce the flame height by one step until the flame is turned off. The Up Arrow Key will increase the flame height each time it is pressed. If the Up Arrow Key is pressed while the system is on but the flame is off, the flame will come on in the high position.

Room *thermostat (Transmitter Operation)
The Remote Control can operate as a room *thermostat. To activate this function, press the *thermostat Key. The LCD display on the Transmitter will change to show that the room *thermostat is “ON” and the set temperature is now displayed. To adjust the set temperature, press the Up or Down Arrow Keys until the desired set temperature is displayed on the LCD screen of the Transmitter.

Smart *thermostat (Transmitter Operation)
The Smart *thermostat function adjusts the flame height in accordance to the difference between the set point temperature and the actual room temperatures. As the room temperature gets closer to the set point the Smart Function will modulate the flame down. To activate this function, press the *thermostat Key until the word "SMART" appears to the right of the temperature bulb graphic. To adjust the set temperature, press the Up or Down arrow Keys until the desired set point temperature is displayed.

Key Lock Function
This function will lock the keys to avoid unsupervised operation. To activate this function, press the MODE and the UP Arrow Key at the same time. To de-activate this function, press the MODE and the UP Arrow Key at the same time.

Low Battery Detection
Transmitter - When the Transmitter batteries are low, a Battery Icon will appear on the LCD display of the Transmitter.
Receiver - When the Receiver batteries are low, No “beep” will be emitted from the Receiver when it receives an On/Off command from the Transmitter. When the batteries are replaced the “beep” will be emitted from the Receiver when the ON/OFF Key is pressed (See Initializing the System for the first time).

Manual Bypass Of The Remote System
If the batteries of the Receiver or Transmitter are low or depleted, the appliance can be turned on manually by sliding the three position slider switch on the Receiver to the ON position. This will bypass the remote control feature and the appliance main burner will come on if the gas valve is in the “On” position.

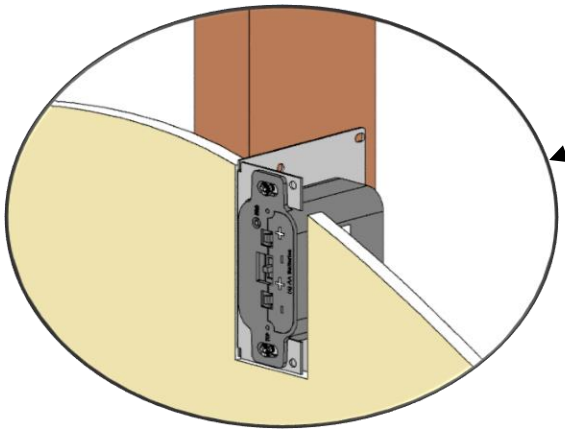

<u>Wall Mount Option</u>

10ft. Extension Harness (Part No. 1001-P904SI) required.

- The Remote Receiver can be mounted on a vertical wall stud using the DCHS as a mounting bracket.
- Ensure that the face is protruding 1/2” so that the face plate will be flush on the face of the wall.
- Drywall cutout size is 2” wide by 4-1/8” tall.
- Must be installed within 10ft of valve assembly (6ft recommended).

SIT Proflame 1 -IPI System Parts List-

	PART NO.	DESCRIPTION
1.	1006-P002SI	Valve IPI Hi/Lo NG
2.	1006-P003SI	Valve IPI Hi/Lo LP
3.	1002-P322SI	IPI Ignition Board
4.	1002-P047SI	Pilot Assembly-LP -24” Wire
5.	1002-P033SI	Pilot Assembly-NG -24” Wire
6.	1002-P850SI	AC Wall Adapter
7.	1002-P12BH	Battery Pack
8.	1001-P280SI	TC - Tubing W/Fittings 1/8 2.182.280
9.	1001-P166SI	TC - Orifice Pilot NG 977.166 #62 (IPI)
10.	1001-P168SI	TC - Orifice Pilot LP 977.168 #35 (IPI)
11.	1002-P012SI	IPI Stepper Kit - LP 907.012
12.	1002-P013SI	IPI Stepper Kit - NG 907.013
13.	1002-P014SI	IPI Reg Kit - LP Hi-Lo 907.014
14.	1002-P016SI	IPI Reg Kit - NG Hi-Lo 907.016
15.	1002-P017SI	TC - Electrode Cable & Sparker IPI 915.017 24"
16.	1002-P119SI	TC - Electrode Cable & Sparker IPI 35" (Infinite, ZCVRB47, VRB46)
17.	1002-P903SI	TC - Electrode Flame Sense IPI 007.253/915.903 24"
18.	1002-P910SI	TC - Electrode Flame Sense 35" (Infinite, ZCVRB47, VRB46)

NOTE: Fan and / or Light Options are not available on some fireplaces. **Check with your dealer.**

Proflame Transmitter
1001-P023SI

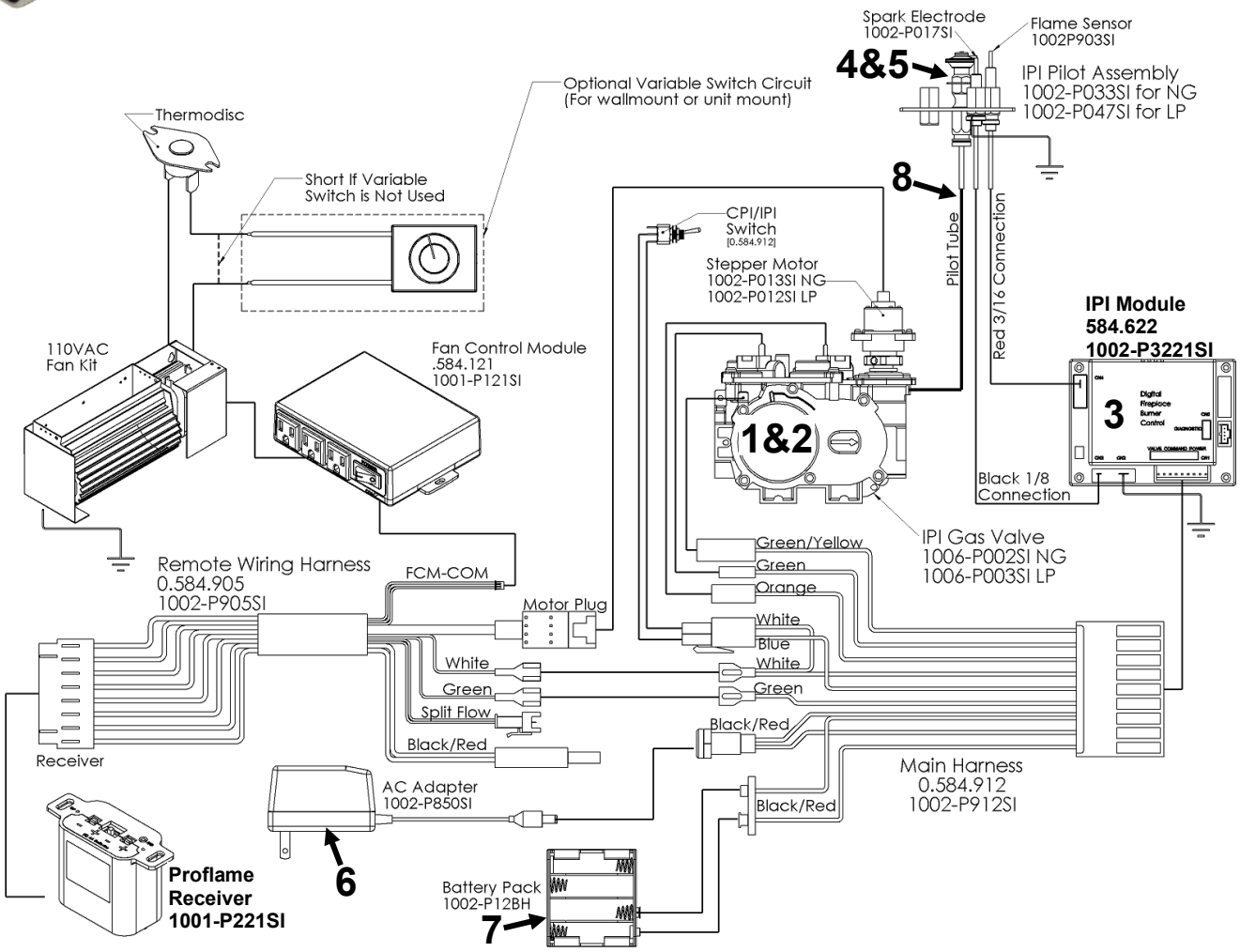

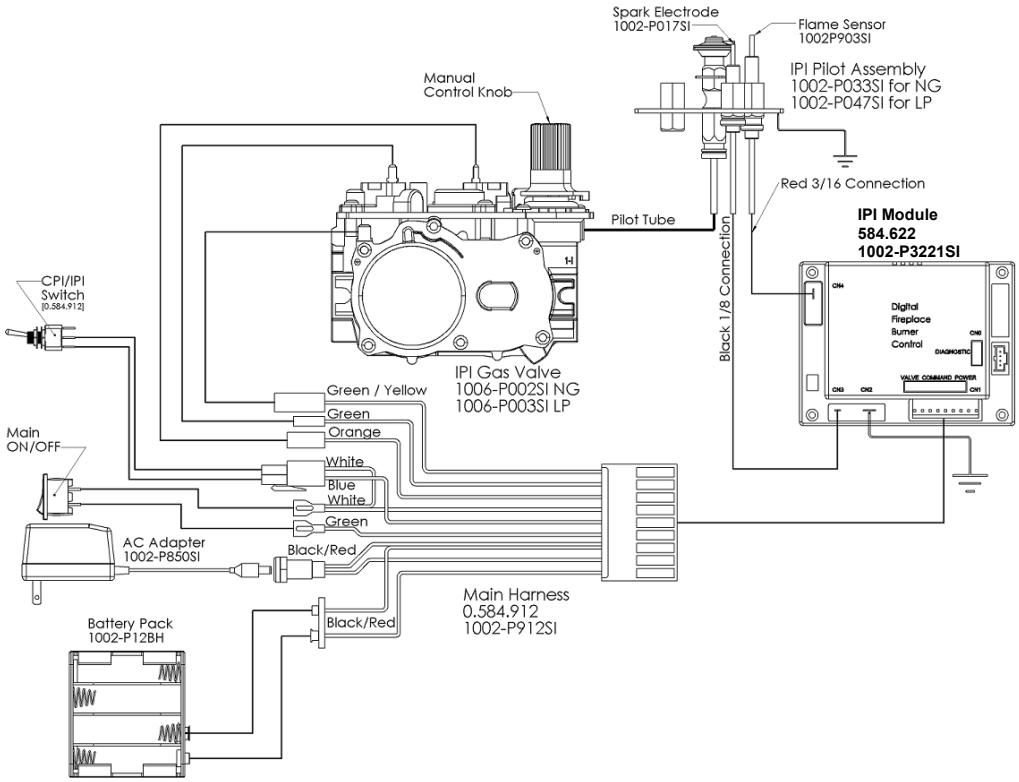

Configuration #1: Basic manual HI/LO and manual ON/OFF capabilities.

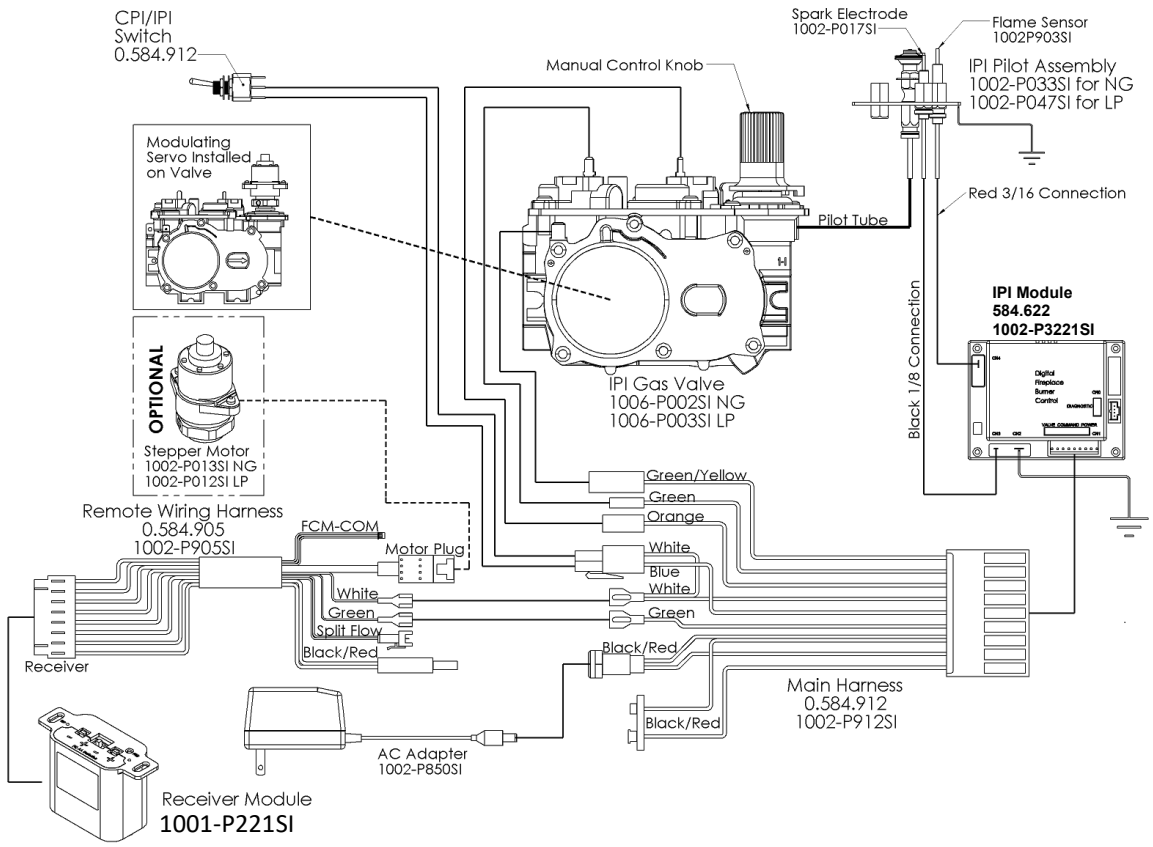

Configuration #2: Remote ON/OFF and Manual HI/LO Capabilities

OPTIONAL: For units with remote HI/LO capabilities, a modulating servo is required to be installed on the valve. The connectors to this servo must be connected to the Remote Harness as shown.

SIT Proflame 1 -Operating Receiver Without Batteries- GT / EGT / GTM / EGTM Remotes

-Wiring Harness P/N 1002-P906si required for both IPI & Millivolt systems.
-Millivolt Systems will also require Power Adapter P/N 1002-P850si.

The Remote Receiver & IPI or Millivolt system can be powered by the AC Adapter. This is advantageous if you do not want to use batteries. Simply connect the AC Adapter into the Remote Control Wiring Harness as per the diagrams below.

IPI System EGTM

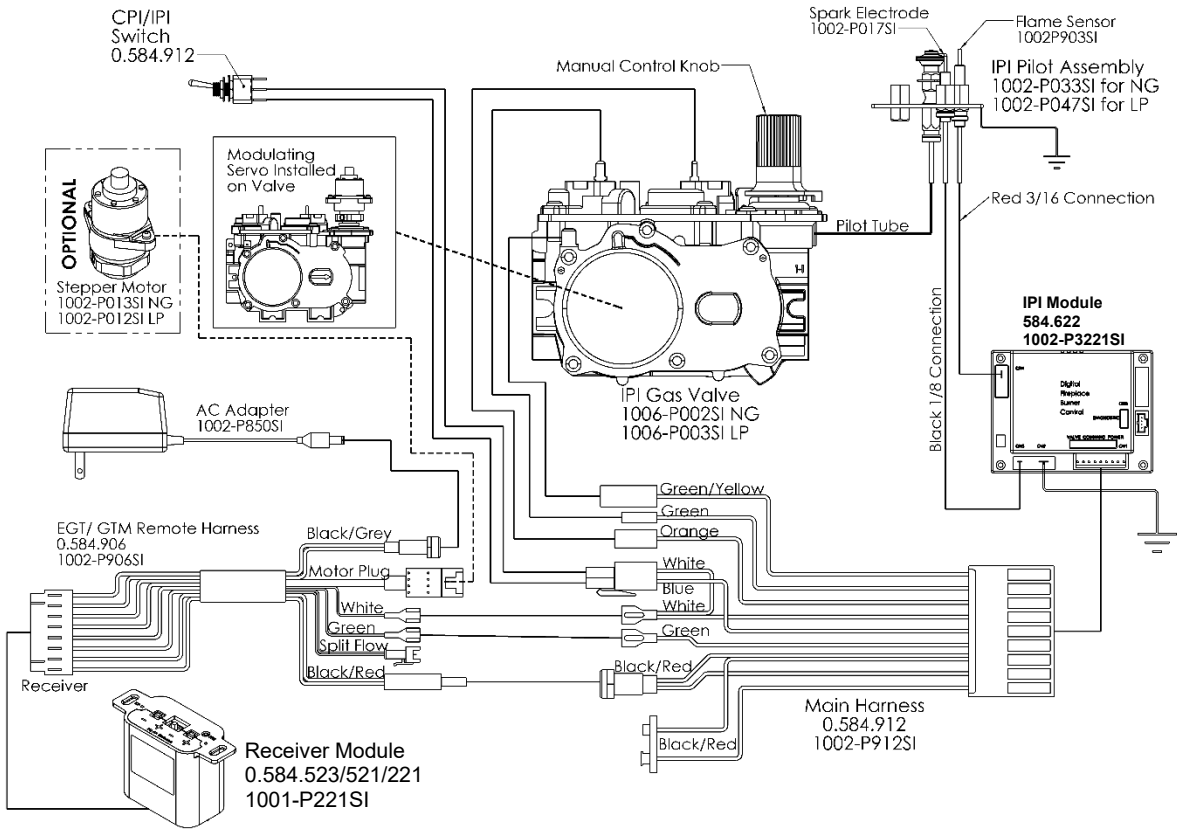

Millivolt System GTM

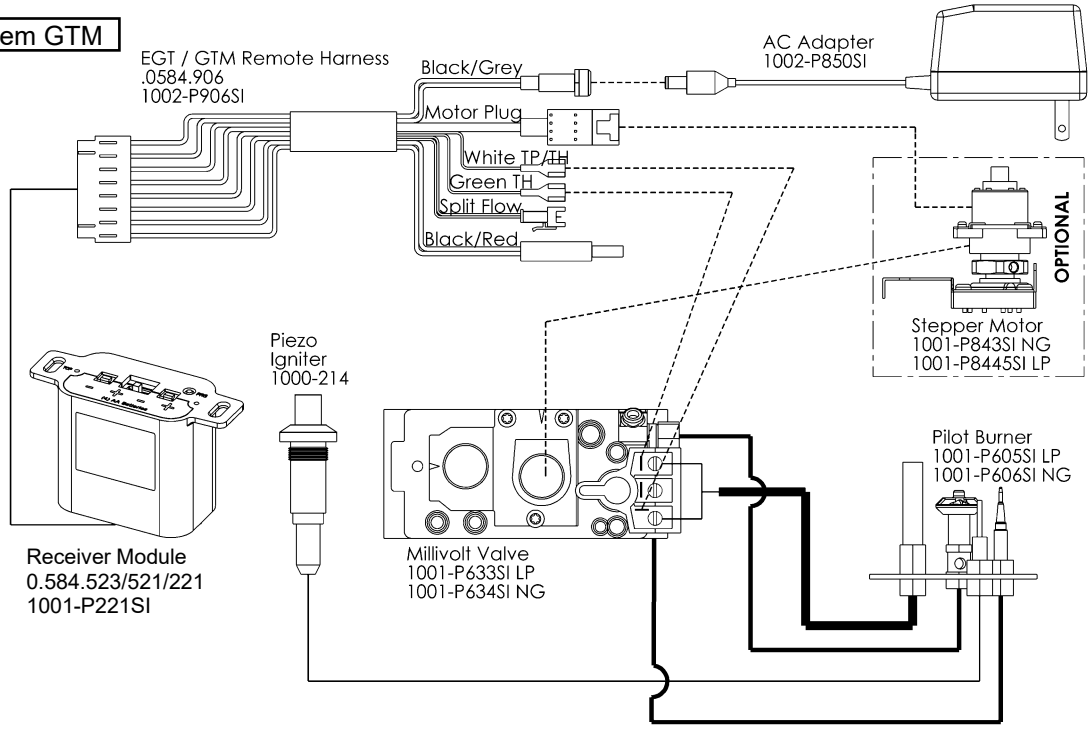

Proflame 2 –NE2 / LPE2 -IPI System Parts List-

IPI PROFLAME 2 - COMPONENT PARTS		
	PART NO.	DESCRIPTION
1.	1005-P001SI	Valve IPI Proflame PF2 885.001 NG - Stepper
2.	1005-P002SI	Valve IPI Proflame PF2 885.002 LP - Stepper
3.	1005-P325SI	Module IPI - Proflame 2 - 584.665
4.	1005-P627SI	Module IPI – Proflame 2 - Basic - 584.627 (N/A)
5.	1005-P924SI	Harness PF2 - 584.924
6.	GTMFL	Transmitter- PF2 - 584.090 - WiFi Version
6b.	1005-P042SI	Transmitter- PF2 - 584.042 - Non-WiFi Version
6c.	1005-P080SI	Transmitter- PF2 - 584.080 - WiFi Version
For Replacement Transmitters, Replace with Same Part Number		
7.	584-PWR-C	Wire Harness PF2 – Power Cord
8.	584-X4P	Terminal Block
9.	584-X10	Wire Harness PF2
10.	584-ACC01-C	Wire Harness PF2 - Fan/Light
11.	584-X8-B	Wire Harness PF2 - Optional Reset Harness
12.	584-X12	Optional Power Vent Harness

IPI - PF1 and PF2 Common Components			
	PART NO.	DESCRIPTION	
13.	1002-P033SI	TC - Pilot Burner IPI (Assembled) NG 199.033	
14.	1002-P047SI	TC - Pilot Burner IPI (Assembled) LP 199.047	
15.	1001-P166SI	TC - Orifice Pilot NG 977.166 #62 (IPI)	
16.	1001-P168SI	TC - Orifice Pilot LP 977.168 #35 (IPI)	
17.	1001-P280SI	TC - Tubing W/Fittings 1/8 2.182.280	
18.	1002-P012SI	IPI Stepper Kit - LP 907.012	P2 CONVERSION
19.	1002-P013SI	IPI Stepper Kit - NG 907.013	
20.	1002-P014SI	IPI Reg Kit - LP Hi-Lo 907.014	P1 CONVERSION
21.	1002-P016SI	IPI Reg Kit - NG Hi-Lo 907.016	
22.	1002-P017SI	TC - Electrode Cable & Sparker IPI 915.017 24"	
23.	1002-P119SI	TC - Electrode Cable & Sparker IPI 35" (Infinite, ZCVRB47, VRB46)	
24.	1002-P12BH	IPI Battery Housing 12bh347-Gr	
25.	1002-P903SI	TC - Electrode Flame Sense IPI 007.253/915.903 24"	
26.	1002-P910SI	TC - Electrode Flame Sense 35" (Infinite, ZCVRB47, VRB46)	

NOTE: Fan and / or Light Options are not available on some fireplaces. **Check with your dealer.**

NOTE: When in Thermostat Mode, the fan has a 5-minute startup delay, and a 12-minute shutdown delay.

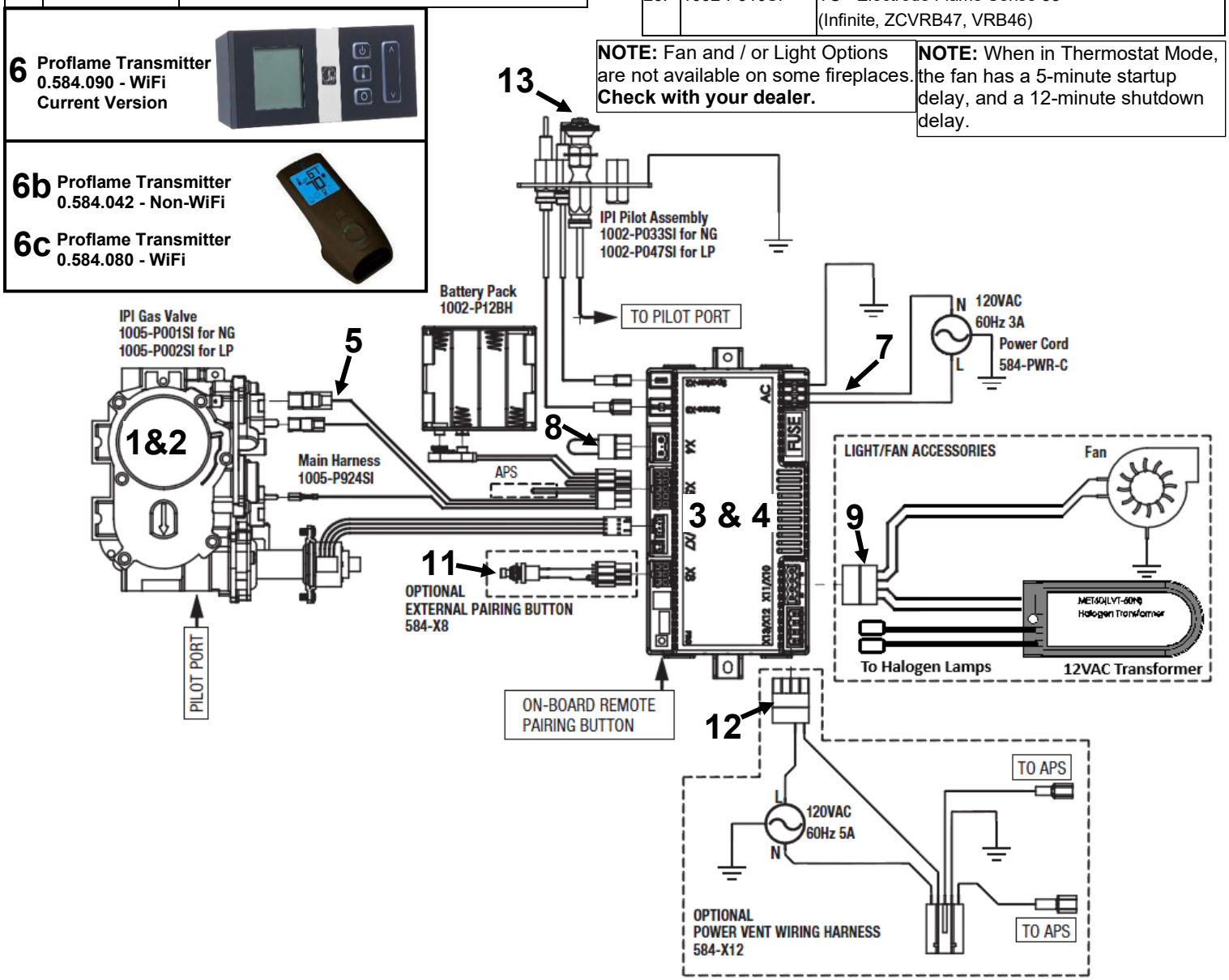

Proflame 2 IPI - IFC Module and Remote Control

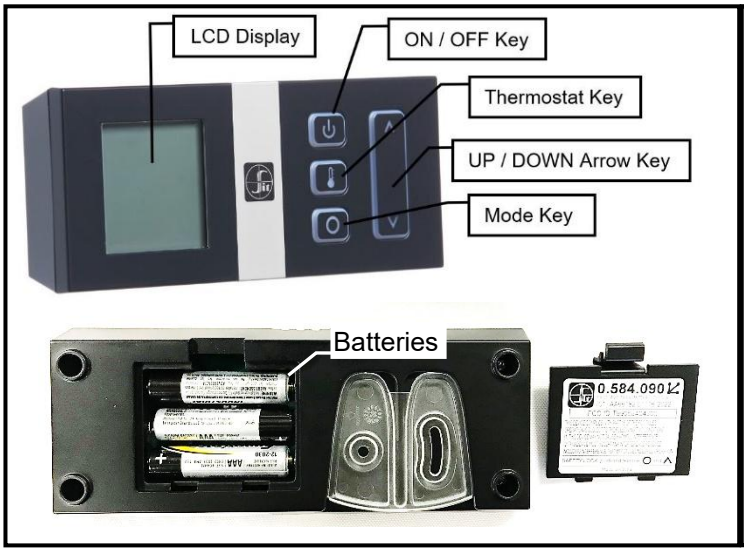

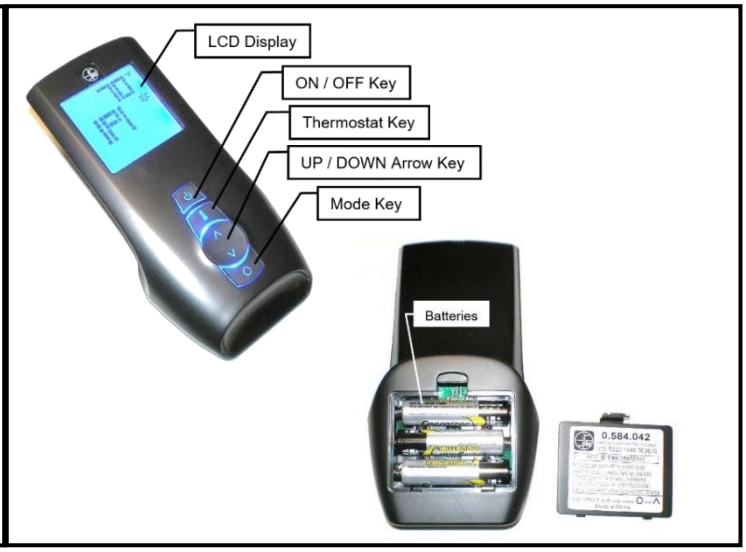

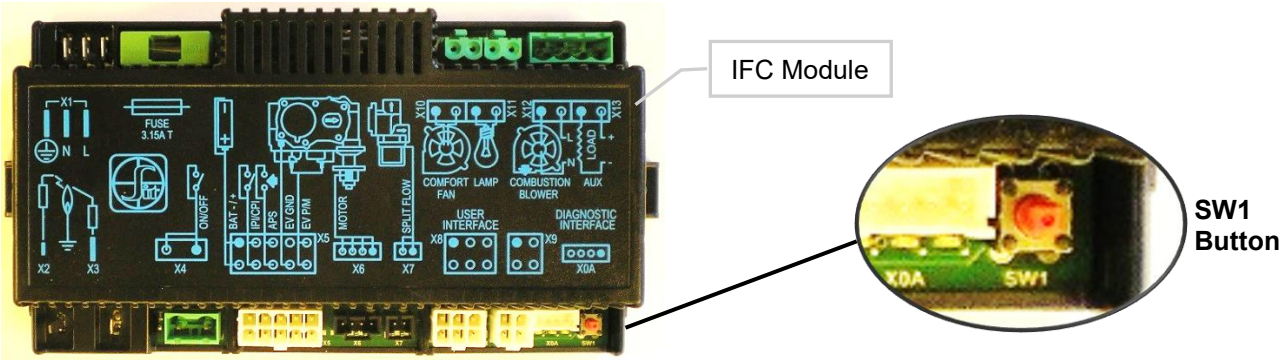

Pairing Remote Control:

- Install the 3 AAA type batteries in the battery bay, located on the base of the Remote Control. Note polarity of the batteries and insert them as indicated.
- Connect the AC power supply to the IFC Module.
- Press the SW1 button on the IFC Module so the IFC will “beep” and a red LED is illuminated to indicate that the IFC Module is ready to synchronize with a Remote Control within 10 seconds. With the batteries already installed in the Remote Control, push the ON button. The receiver will “beep” four times to indicate the Remote Control’s command is accepted.

The system is now initialized.

Resetting Proflame 2 IFC Module for Manual Use

If the transmitter gets misplaced, is broken, or is no longer wanted the PF2 Module can be reset to a manual system. A manual on/off switch or thermostat may be installed at the X4 connector (this connection is Jumped at the factory) no power is required.

Note: the fireplace accessories (fan, lights) will retain the last settings they had before being reset to manual mode.

The following sequence must be followed to reset the PF2 Module:

- Press the Red **SW1** button until you hear three beeps.
- Within 10 seconds press the **SW1** button again until you hear it beep.
- The PF2 Module may now be turned on/off manually (x4 connector) by a switch (not supplied), the pilot will remain on CPI (continuous pilot ignition) mode, all other functions of main burner, fan and lights will be on the high setting.

Fan Startup and Shutdown Timings:

Fan setting is started with a delay of 5 minutes from the fireplace ignition and stopped with a delay of 12 minutes from the fireplace switching off.

Low Battery Power Detection

When the Remote Control’s batteries are low, a Battery Icon will appear on the LCD display before all power is lost. When the batteries are replaced, this icon will disappear.

Battery Backup

The PF2 module is powered by line voltage (AC) with provision of battery backup in case of main power loss. Fans and lighting features will not function with the PF2 Module is powered by battery backup. It is recommended that the 4 x AA batteries are changed before each heating season.

24 Hour Safety Shut Off

If a transmission (user action) has not been detected by the receiver within 24 hours, the system will shut off as a safety feature.

Cold Climates – CPI Setting - Proflame 2 Remote Control

Use the CPI setting during cold weather, otherwise the fireplace may have a hard time starting up and establishing a flame. The **CPI** (Continuous Pilot Ignition) setting will keep the firebox and fireplace exhaust vent warm during cold weather. When the firebox and exhaust vent are warm, exhaust gasses will readily flow out of the firebox.

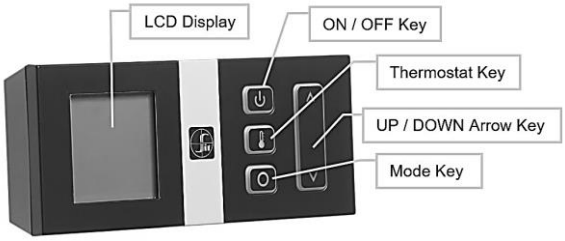

If the firebox and venting are too cold, there is resistance due to the heavy cushion of cold air, and combustion gasses may not rise into the exhaust vent, thus causing the fireplace to cycle or **Lockout** (if this happens see ***Lockout Reset Procedures*** below).

NOTE: The pilot system for this appliance may be equipped with a **Seven Day Timer**, in which case the pilot flame will be extinguished if the main burner has not been turned ON for seven days. This Seven Day Cycle is reset every time the main burner is cycled ON / OFF and the pilot remains lit. If more than seven days has passed since the main burner has been cycled ON / OFF and the pilot is also out, follow the procedures described in this manual to light the pilot.

To switch from IPI to CPI Mode:

1. Turn the fireplace OFF using the **ON / OFF Key**.

2. Press the **Mode Key**. Display will appear as below.

3. Press UP on the **UP / DOWN Arrow Key**.
Display will show **CPI.**

The module in the fireplace will beep once to confirm command.

TO RETURN TO IPI (INTERMITTENT PILOT) MODE:

Repeat steps one and two, and then press DOWN on the **UP / DOWN Arrow Key**.

The module in the fireplace will beep once to confirm command.

Lockout Reset Procedures – Proflame 2

If the fireplace has cycled too many times in a short period of time, it will shut down and become unresponsive to any new command.

The LED light on the Proflame 2 module in the fireplace will be flashing red.

This condition is a **Lockout** state.

Lockout Reset Procedure:

1. Disconnect power from the Proflame 2 module in the fireplace for 10 seconds. This includes removing the backup batteries.
2. Once the 10 second interval has passed, reconnect power and reinstall backup batteries. The pilot should now try to light.
3. If the fireplace does not come on, call your fireplace technician.

Remote-Flame Control

The proflame has six (6) flame levels. With the system on, and the flame level at the maximum in the appliance, pressing the Down Arrow Key once will reduce the flame height by one step until the flame is turned off.
The Up Arrow Key will increase the flame height each time it is pressed. If the Up Arrow Key is pressed while the system is on but the flame is off, the flame will come on in the high position. (Fig. 7 & 8) A single "beep" will confirm reception of the command.

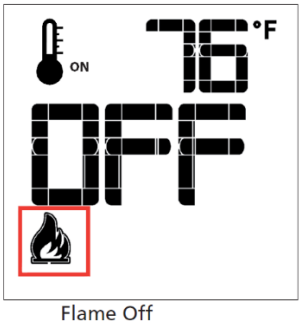

Fig. 7: Flame Off

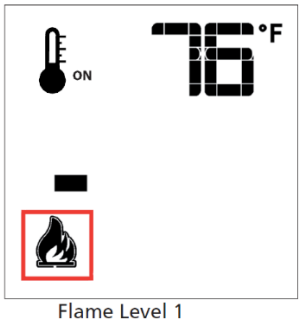

Flame Level 1

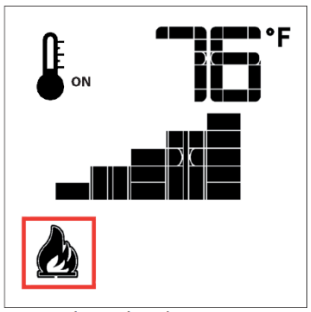

Fig. 8: Flame level 5

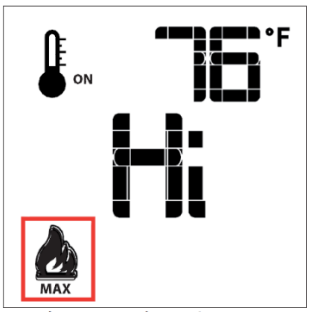

Flame Level Maximum

Room Thermostat (Transmitter Operation)

The Remote Control can operate as a room thermostat. The thermostat can be set to a desired temperature to control the comfort level in a room.
To activate this function, press the Thermostat Key (Fig. 1). The LCD display on the Transmitter will change to show that the room thermostat is "ON" and the set temperature is now displayed (Fig. 9). To adjust the set temperature, press the Up or Down Arrow Keys until the desired set temperature is displayed on the LCD screen of the Transmitter.

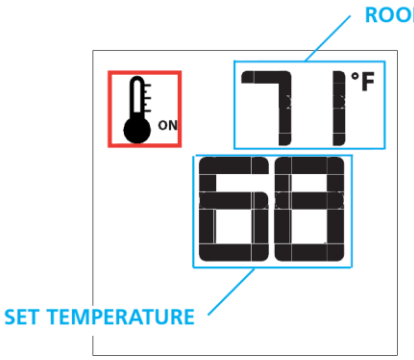

Fig. 9

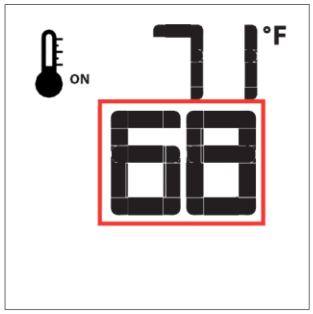

Fig. 10

Smart Thermostat (Transmitter Operation)

The Smart Thermostat function adjusts the flame height in accordance to the difference between the set point temperature and the actual room temperatures. As the room temperature gets closer to the set point the Smart Function will modulate the flame down.
To activate this function, press the Thermostat Key (Fig. 1) until the word "SMART" appears to the right of the temperature bulb graphic (Fig. 11).
To adjust the set temperature, press the Up or Down Arrow Keys until the desidered set temperature is displayed on the LCD screen of the Transmitter (Fig. 12).

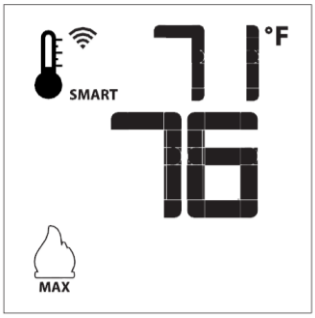

Fig. 11: Smart flame function

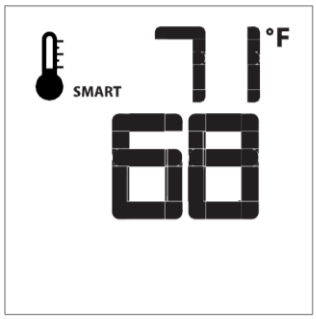

Fig. 12

Note:
When Smart Thermostat is activated, manual flame height adjustment is disabled.

Fan Speed Control

If the appliance is equipped with a hot air circulating fan, the speed of the fan can be controlled by the Proflame system. The fan speed can be adjusted through six (6) speeds. To activate this function use the Mode Key (fig.1) to index to the fan control icon (Fig. 13). Use the Up/Down Arrow Keys (Fig.1) to turn on, off or adjust the fan speed (fig. 14). A single "beep" will confirm reception of the command.

Fig. 13

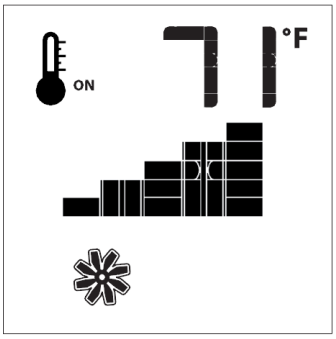

Fig. 14

Remote dimmer control (Halogen lights only)

The auxiliary function controls the AUX power outlet by the dimmable light control. To activate this function use the Mode Key (fig. 1) to index to the AUX icon (fig. 15 & 16).
The intensity of the output can be adjusted through six (6) levels. Use the Up/Down Arrow Keys (Fig.1) adjust the output level (fig. 16). A single "beep" will confirm reception of the command.

Note:
This function is only available in Room Thermostat or Smart Thermostat Control Mode.

Fig. 15

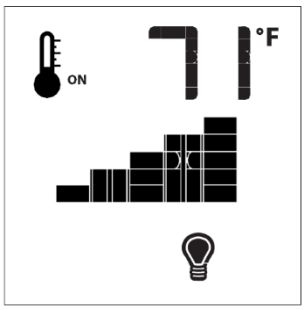

Fig. 16

24IDV Series Proflame 2 Schematic

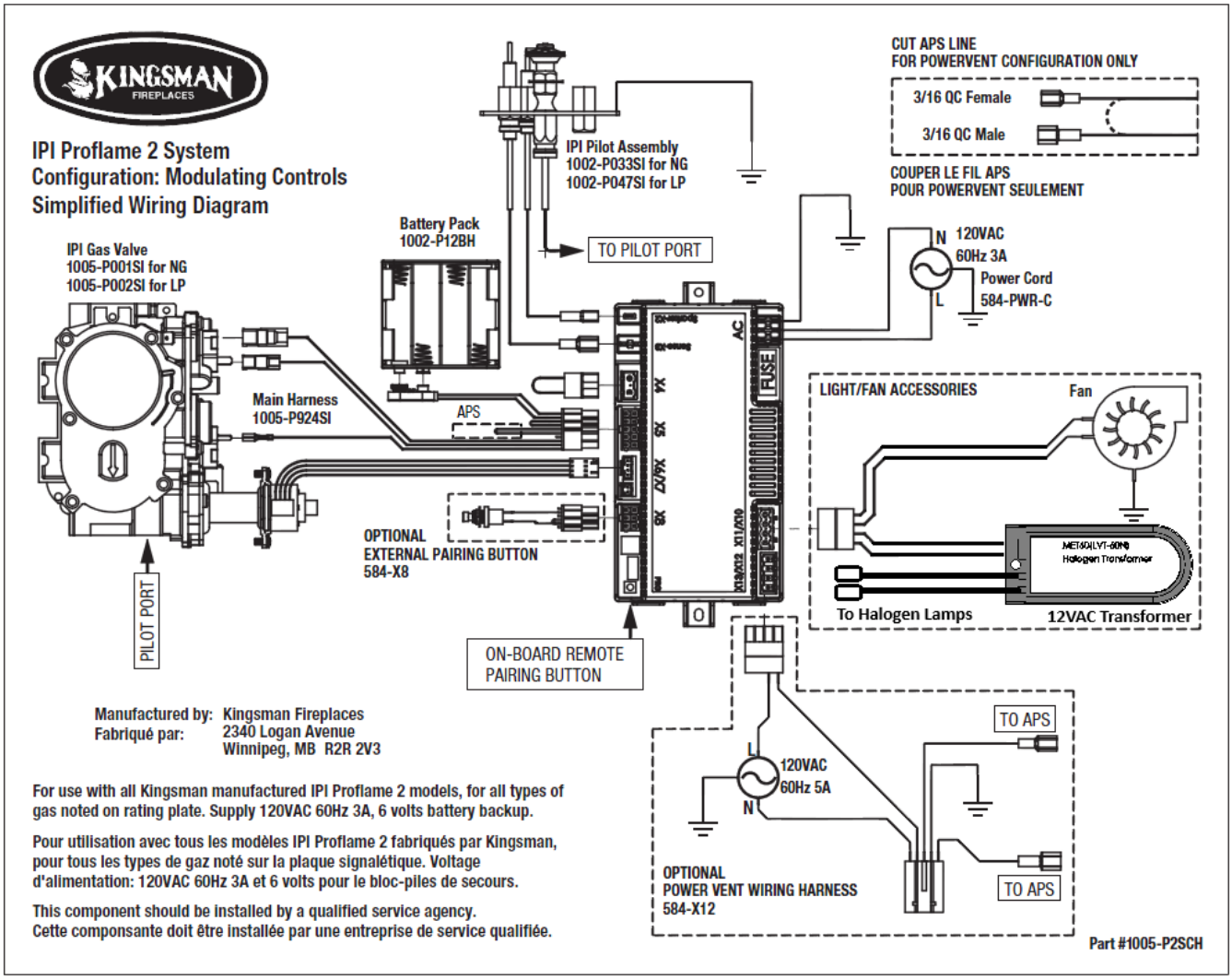

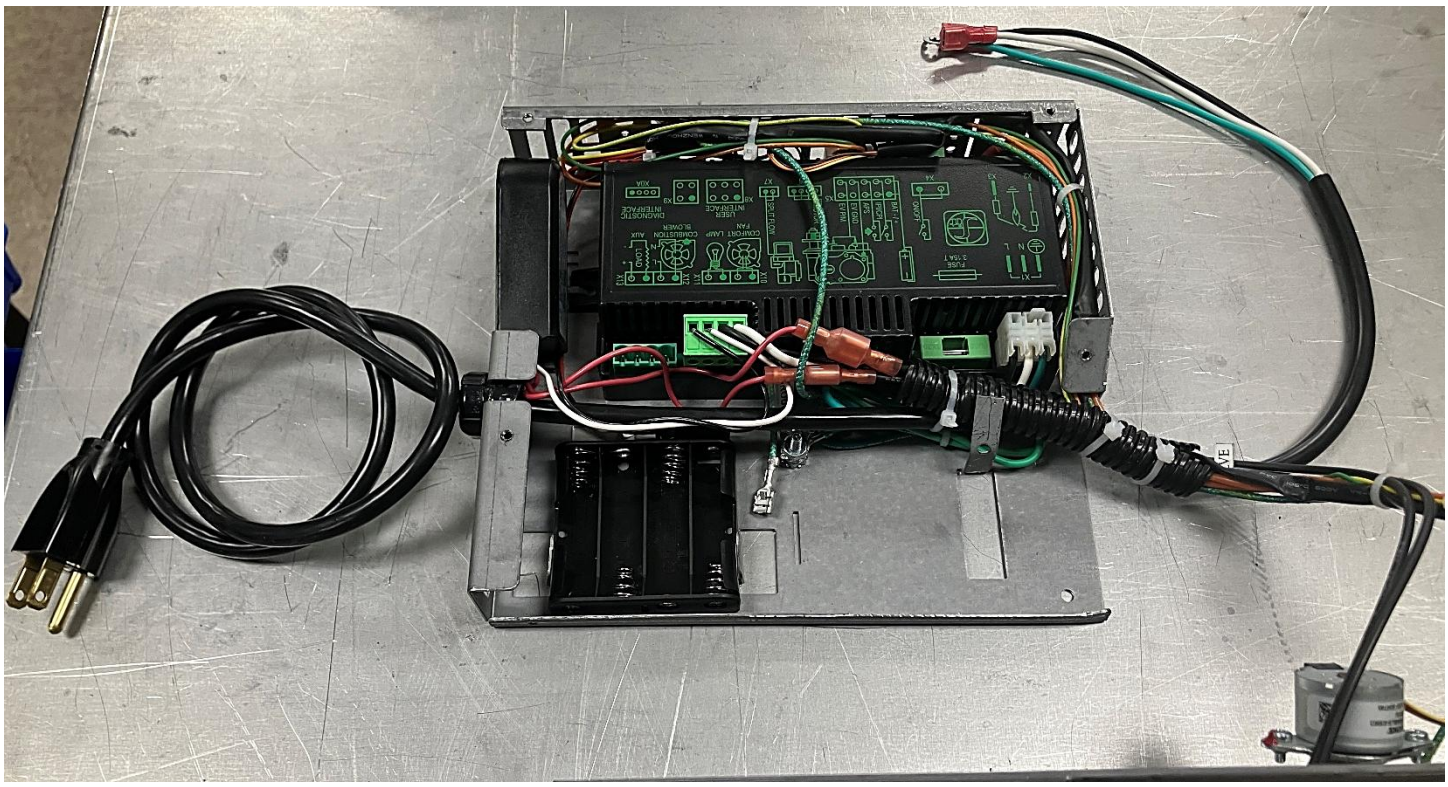

WMBH – Wall Mount Battery Holder – Proflame 1 and 2 IPI Models - Option

The WMBH provides the option for a more convenient and accessible location for the backup batteries.
NOTE: The WMBH is **NOT** a remote control receiver. It functions as a Battery Holder and mode selector switch **ONLY**.

- NOT FOR USE WITH POWER VENTS -

Parts List:
[1] Battery Holder
[1] DCHS Mount Bracket
[1] Wall Mount Cover Plate
[1] 16 ft. Wiring Harness

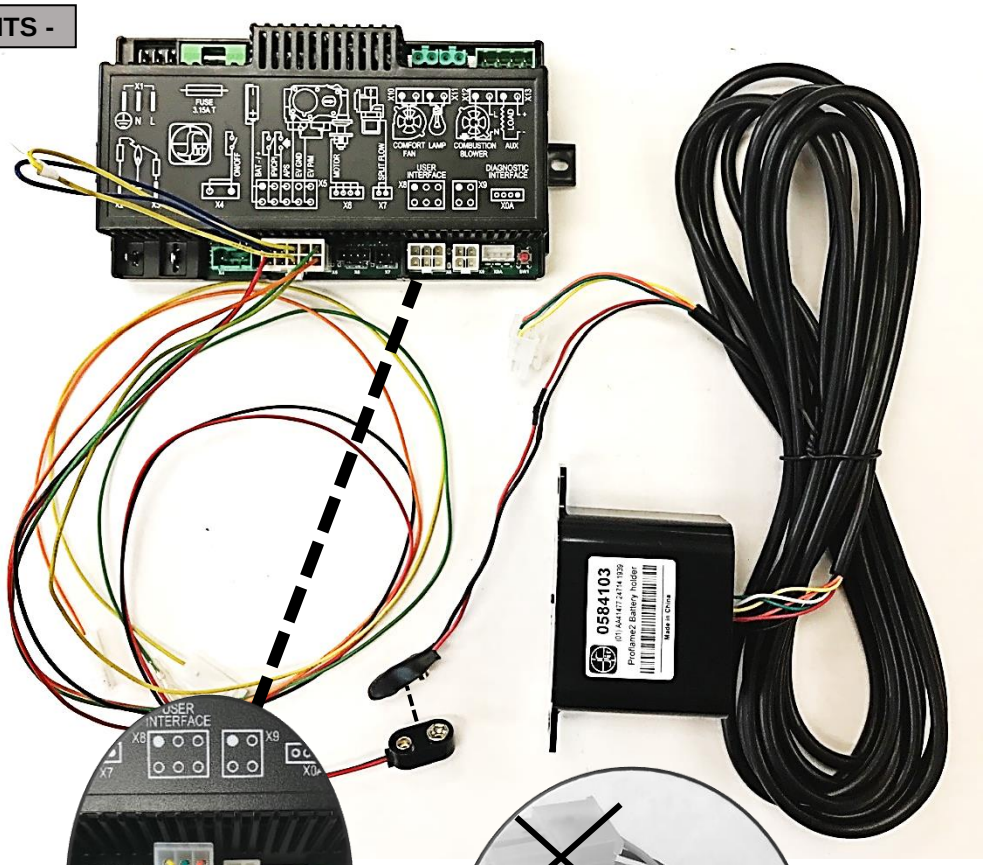

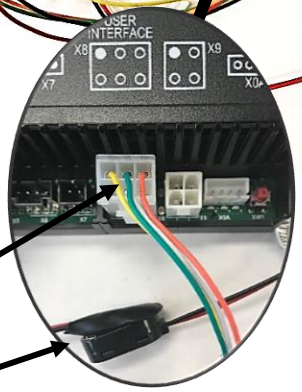

Proflame 2:
-Plug the **Square Plug Connector** into the **User Interface Socket** in the P2 Module.

-Plug the **Battery Connector** into **Battery Holder** connection on the Proflame 2 wiring harness.

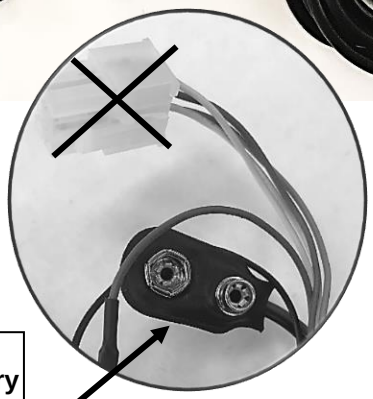

Proflame 1:
-Plug **Battery Connector** into **Battery Holder** connection on wiring harness.

-The **Square Plug Connector** on the 16ft wiring harness is not used.

Installation:

- The Battery Holder can be mounted on a vertical wall stud using the DCHS as a mounting bracket.
- Ensure that the face is protruding 1/2” so that the face plate will be flush on the face of the wall.
- Drywall cutout size is 2” wide by 4-1/8” tall.
- Must be installed within 16ft of valve assembly (12ft recommended).

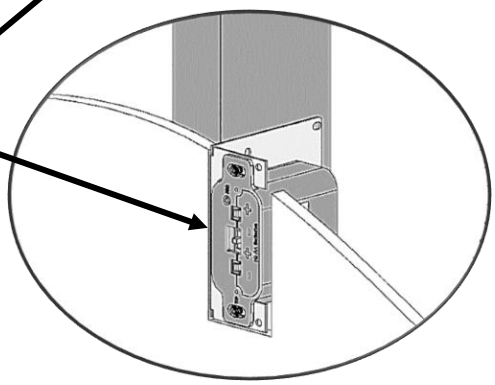

Operating Instructions:

- **Proflame 1:** Set the switch on the Battery Holder to either the **ON** or **REMOTE** position. The WMBH functions as a battery backup should a power outage occur.
- **Proflame 2:** Set the switch on the Battery Holder to the **REMOTE** position. **NOTE:** If the switch on the Battery Holder is set to **ON**, the remote control will be disabled. The WMBH functions as a battery backup should a power outage occur. Refer to the manual that accompanies the Battery Holder for further instructions.

PARTS LIST:

[1] – Co-linear termination

[8] - #8 washers

[8] - #8 x 1 PH Quad

[8] - #8-18 x 3/4" PH DT

[1] – Tube Millpac Black

Vertical Venting in Cold Climates

In cold climate conditions where temperatures go below -10°C [14°F], we recommend that the chase be insulated and where the vent pipe enters into the attic space that the pipe be wrapped with an insulated Mylar sleeve. This will increase the temperature of the vent and help the appliance to vent properly in cold weather conditions.

It is also important in vertical vented direct vent appliances that the appliance be operated daily during the winter months as this will help stop the Termination from freezing up. We recommend using a thermostat set at room temperature to allow the unit to cycle.

For IPI models it may be necessary to set the appliance to Standing Pilot mode to maintain heat in the cavity. The purpose of this procedure is to prevent cold air from penetrating the chimney and then onto the living space. Therefore, when the internal temperature is slightly elevated the fireplace is able to freely exhaust its combustion and hence making it easier to startup.

This appliance must not be connected to a chimney flue serving a separate solid-fuel burning appliance.

This appliance is approved with Kingsman Flex Vent System (as listed in the manual). Do not mix venting components from different manufacturers.

All venting lining products must be approved and installed according to the vent manufacturers installation instructions. All vent liners must terminate in a rain cap to prevent debris and rain from entering the vent and possibly damaging the appliance or creating an unsafe condition. The area between the existing chimney and liner must be capped off for the same reasons as above and to reduce the chances of venting problems and corrosion of the vent.

If this fireplace insert is to be used to replace an existing fireplace insert the existing vent liner must be of the proper size and if so must be inspected for obstructions, damage and/or corrosion. Replacement must be done as necessary.

Before any vent liner is run through a chimney or other approved venting system, chimney must be inspected, cleaned and repaired if necessary. A chimney which was used for a solid fuel fireplace must be professionally cleaned in order to reduce corrosion of the vent or other possible safety hazards.

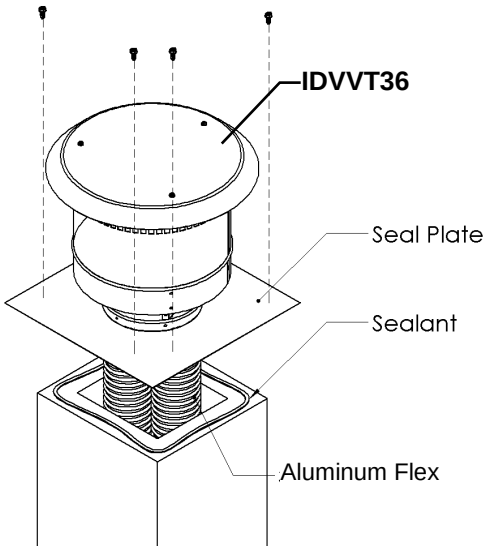

	Vertical (rise)	Horizontal (run)
Min.	12ft [3.7m]	0ft [0m]
Max.	40ft [12.2m]	2ft [0.6m]

Installation of Vertical Termination

1. Before attaching the flex vents to the termination, you will have to determine how the cap will be attached to the existing chimney crown, clay lined chimney or wood stove vent pipe. The Seal Plate of the termination may be cut, notched and formed to make a good seal to the existing vent or be left flat.

2. Using a high quality sealing compound (RTV Silicone) place a bead of sealant onto the vent or chimney top. This will provide a seal against water and rain from entering the existing flue.

3. Attach the vent pipes to the termination with Millpac and [4] screws and washers per pipe joint. Be sure to label the exhaust and intake flex pipes. Make sure not to connect the exhaust to the intake or vice versa. Lower the termination and vent pipe down the vent and screw the seal plate to the chimney crown, clay tile chimney, or wood stove vent. It may be necessary to predrill holes into the chimney crown (depending on material) [8 screws].

Venting System for IDV24	
IDVVT36	Vertical Vent Termination
IDVFK25	Flex Pipe kit ([Qty 2] 3" x 25ft unexpanded flex pipes complete with Millpac and screws.)
I23FAK-KIT	For use with the IDV24 fireplace when venting must pass through a 6-inch chimney.

⚠ WARNING:

Failure to position the parts in accordance with these diagrams or failure to use only parts specifically approved with this appliance may result in property damage or personal injury.

Cutting any sheet-metal parts of the fireplace, in which the gas fireplace insert is to be installed, is prohibited.

IDV24 Vent Pipe Installation

Follow this procedure in order to ensure a tight connection between the gas fireplace insert, the adapter plate, and the vent pipes.

1. Attach the vent pipes to the termination with Millpac and 4 screws per pipe joint. Be sure to label the exhaust and intake flex pipes. Make sure not to connect the exhaust to the intake or vice-versa. Lower the termination and vent pipe down the vent and screw and seal plate to the chimney crown, clay tile chimney or wood stove vent. It may be necessary to pre-drill holes into the chimney crown (depending on material) (8 screws).
2. The two vent pipes should now be hanging in the existing fireplace. Attach the adapter to the two suspended vent pipes with Millpac and screws. Let the adapter hang in place until the unit is ready to be positioned.
3. Slide the unit into place carefully. Ensure that the adapter slides along the top of the unit, in between the guides, and check that it remains flat. (Fig. 2)
4. Once the unit is slid back into position use the two screws previously removed to secure the adapter plate. When tightening the adapter plate check to make sure the plate is flat to the unit and the rear catch lock is engaged over the rear tab of unit. (Fig. 2 & 3)
5. Use Mill-Pac to seal the vent pipe joints and ensure that it is free of any leakage.

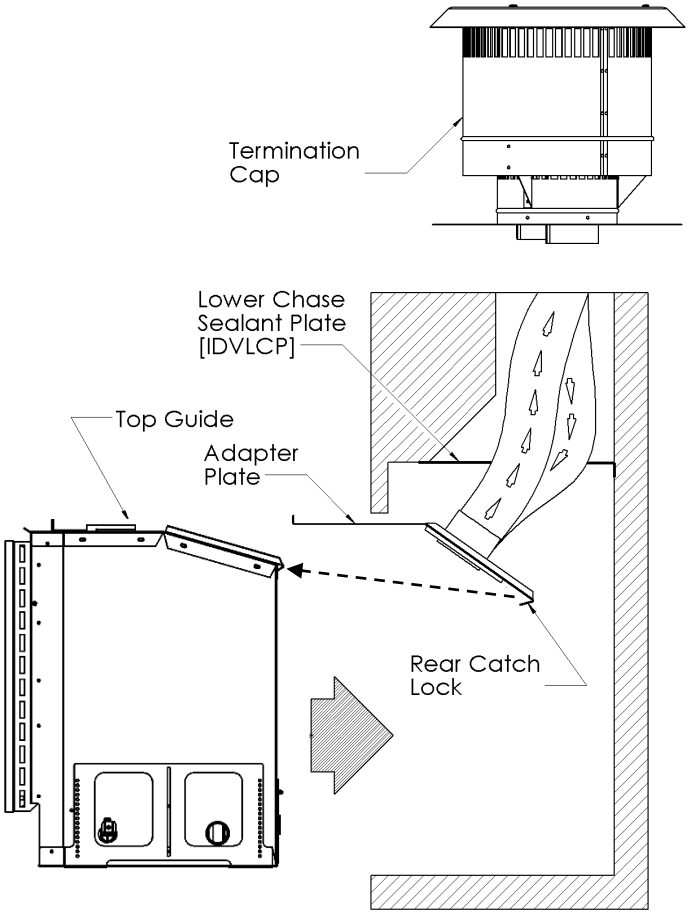

Figure 2 – Base unit chimney venting install

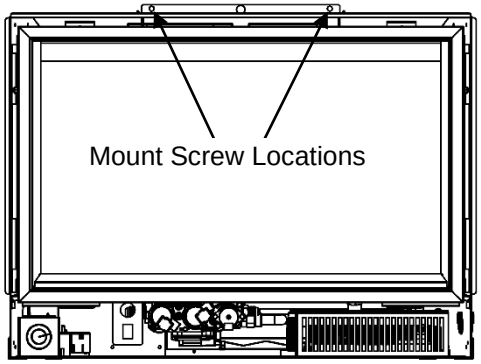

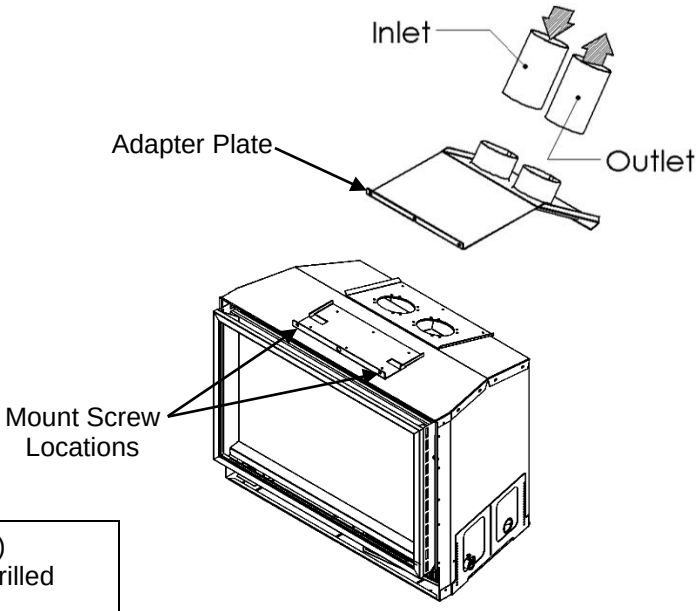

NOTE: If the factory-built fireplace has no gas access hole(s) provided, an access hole of 1.5in [37.5mm] or less may be drilled through the lower sides or bottom of the firebox in a proper workmanship like manner. This access hole must be plugged with non-combustible insulation after the gas supply line has been installed.

IDV24 Chimney Cavity Insulation

If You Live in A Cold Climate Zone And Your Chimney Is On The Side Of Your House

In cold climates, especially where the chimney is located on the outside of the home it may be necessary to insulate the chimney cavity with NON-COMBUSTIBLE insulation such as Thermafiber or Roxul insulation. This will keep the chimney cavity warm and avoid cold start ignition problems.

FOLLOW ALL LOCAL CODES.

-Vertical Venting Runs Taller Than 15 Feet-

We recommend that the pilot be left on at all times for vertical venting runs taller than 15 feet. This will maintain a slight draft in the vent, allowing the burner to light quickly.

The pilot should be lit ½ hour before turning on appliance. The pilot should be left on during the heating season.

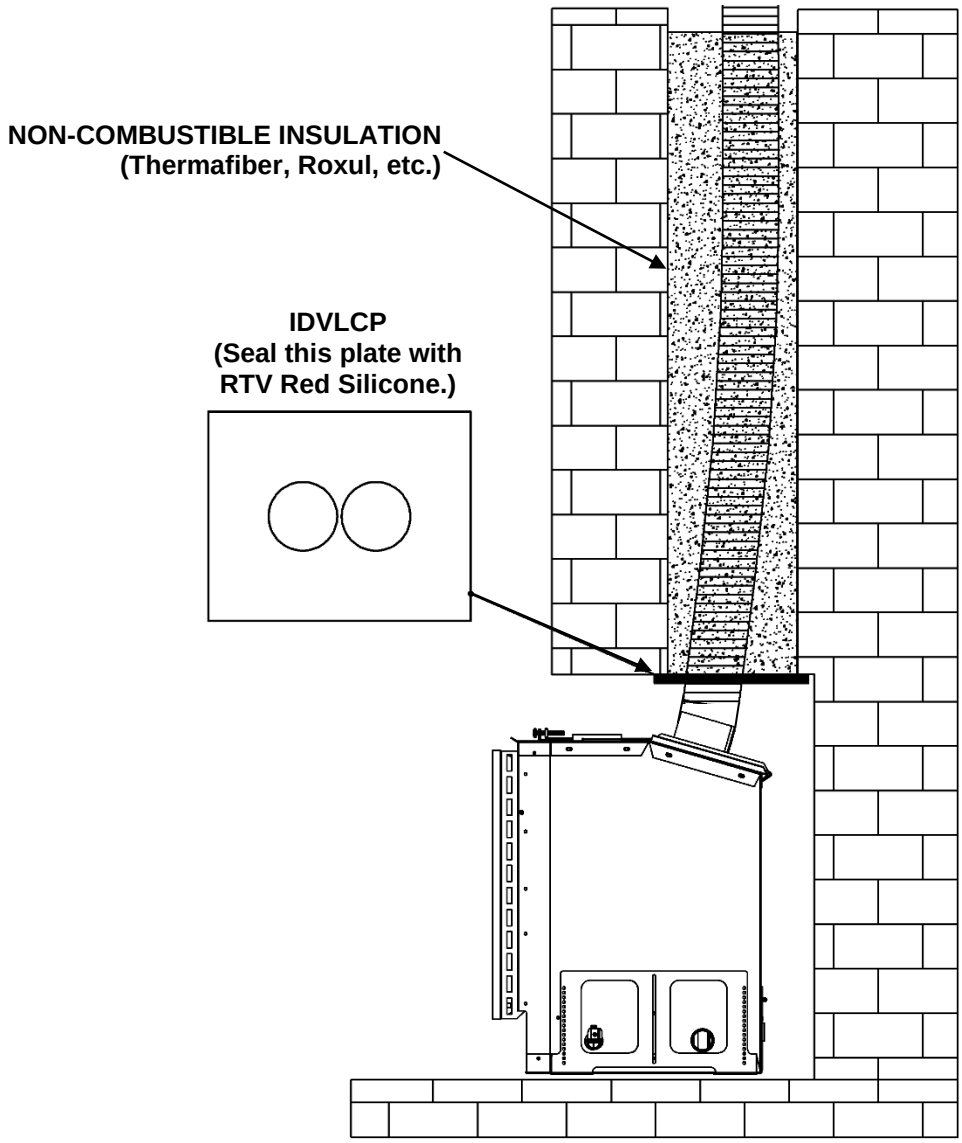

I23FAK-KIT Flue Adapter Kit Option

For use with the IDV24 fireplace when venting must pass through a 6-inch chimney.

I23FAK-KIT Parts List:
[Qty 2] 2 to 3 Inch Adapters
[Qty 1] 6 to 7 Inch Adapter

When using 2 / 3 Venting:

- **Minimum** vent height is 12 feet.
- **Maximum** vent height is 25 feet.
- IDVVT36 Termination must be used.

Note: The following items must be ordered separately:

I23FK25 – Consists of:
- 2 inch flex venting (25 foot length)
- 3 inch flex venting (25 foot length)

IDVVT36 Termination c/w Seal Plate

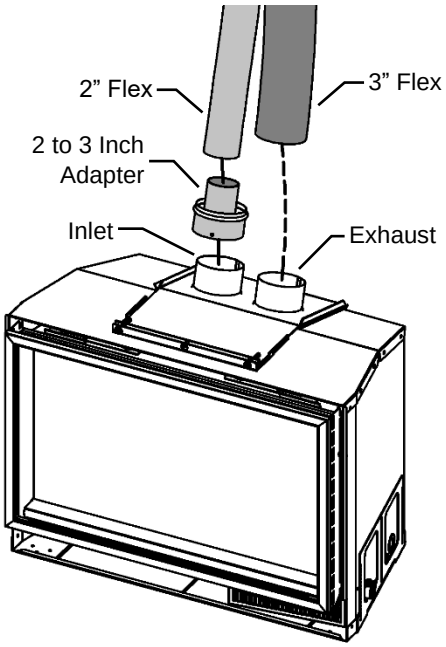

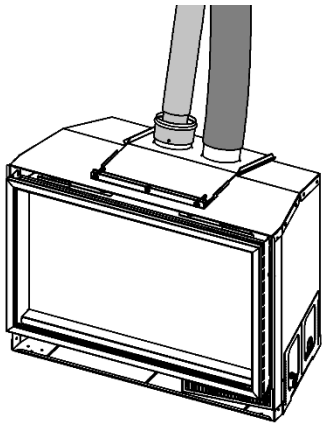

6 Inch Round Chimney

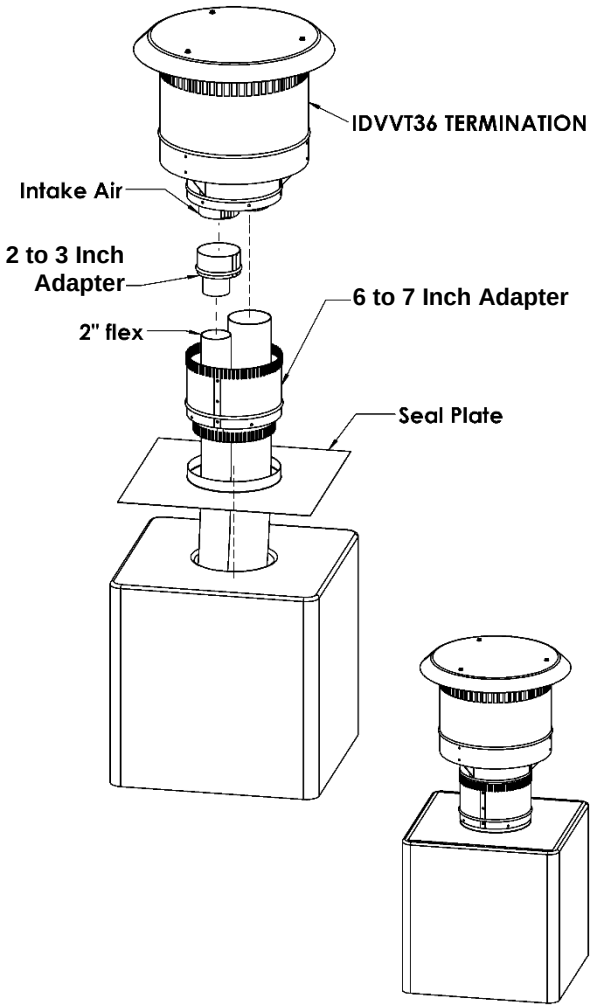

6 Inch Square Chimney

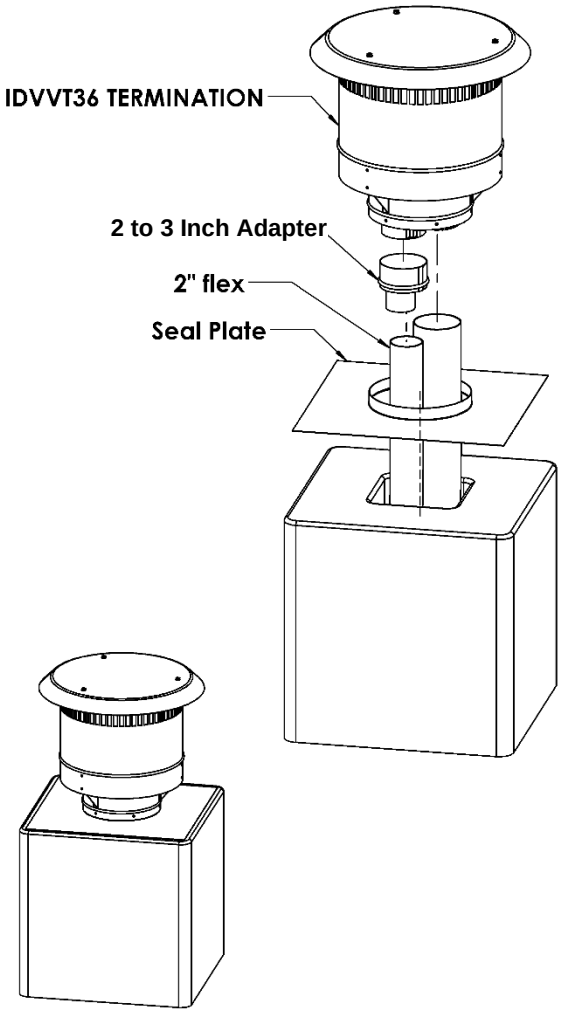

IDV24 Parts List

PART NO.	DESCRIPTION
FIREPLACE BASE UNIT	
IDV24N [Millivolt] IDV24NE [IPI]	INSERT DIRECT VENT FIREPLACE Natural Gas 24,000 BTU
IDV24NE2 [IPI]	P2 System c/w Remote Control, Halogen Lights
IDV24LP [Millivolt]	INSERT DIRECT VENT FIREPLACE
IDV24LPE [IPI]	Liquid Propane 24,000 BTU
IDV24LPE2 [IPI]	P2 System c/w Remote Control, Halogen Lights
LOG SETS- KINGSMAN	
LOGF24OAK	Split Oak Log Set
MARQUIS OPTIONS	
MQLOGF24DW	Driftwood Log Set
MQG5ZG	Glass Media - ZIRCON Glacier Ice - 5 lbs.
MQG5A	Decorative Ember Glass - 1/2" Azuria (Light Blue) - 5 lbs
MQG5B	Glass Media - 1/2" Black - 5 lbs.
MQG5C	Glass Media - 1/2" Bronze - 5 lbs.
MQG5W	Decorative Glass - 1/2" White - 5lbs
MQROCK2	Rock Set - Contemporary Collection - Natural
MQROCK3	Rock Set - Contemporary Collection - Multi-Colored
MQSTONE	Decorative Stones
MQEMBER3	Ember Chunks - (3 bags)
RBCB1	Cannonballs
IDV24 CLEAN VIEW FRONT	
I24CV1BL	Clean View - Black - c/w Safety Screen - 30 1/2" W x 21 7/16" H x 15/16" D
SURROUNDS FOR CLEAN VIEW FRONTS (OPTIONAL)	
I24S3827	Surround 37-13/16” Wide by 27” Tall by 9/16” Thick [Black]
I24SPF3829	Picture Frame Surround 38” Wide by 28-15/16” Tall by 9/16” Thick [Black]
I24SU4541	Universal Surround (for custom applications) 45” Wide by 41” Tall
OTHER ACCESSORIES	
I34R40	2-1/2” Riser 40”
I33CS	Mantel Clearance Shield
REPLACEMENT SAFETY SCREEN	
I24CSS	Safety Screen Barrier (Replacement)
BRICK LINERS	
IDV24RLT	Brick Liners
IDV24 CONVERSION KITS	
24IDV-CKNG	Conversion Kit Natural Gas (IDV24N) [Millivolt]
24IDV-CKLP	Conversion Kit - Liquid Propane (IDV24LP) [Millivolt]
24IDV-CKNGI	Conversion Kit Natural Gas (IDV24NE) [IPI]
24IDV-CKLPI	Conversion Kit - Liquid Propane (IDV24LPE) [IPI]
24IDV-CKNG2	Conversion Kit Natural Gas (IDV24NE2) [IPI]
24IDV-CKLP2	Conversion Kit - Liquid Propane (IDV24LPE2) [IPI]
REMOTE CONTROL - MILLIVOLT	
GTRC	Remote Control Millivolt - Thermostat
GTMRCN	Remote Control Millivolt – Thermostat/Modulating - NG
GTMRCP	Remote Control Millivolt – Thermostat/Modulating - LP
REMOTE CONTROL – PROFLAME 1	
EGTRC	Remote Control IPI (Thermostat)
EGTMRCN	Remote Control IPI (Thermostat/Modulating - NG)
EGTMRCP	Remote Control IPI (Thermostat/Modulating - LP)
THERMOSTATS AND OTHER ACCESSORIES	
Z2MT	Thermostat Digital - Vertical Wall Mount - MV/PF1
Z80PT	Thermostat Programmable Digital - Wall Mount - MV/PF1
DCHS	Remote Control Heat Shield
1001-P904SI	Remote Receiver Extension Harness (GT Series Remotes Only)-10ft.
WMBH	Wall Mount - Battery Backup Holder Kit - c/w 16 FT Harness - PF1/2 (Convenient and accessible location for Battery Backup for IPI Systems)
REMOTE CONTROL – PROFLAME 2	
RCP2WIFI	**WI-FI Dongle and Harness Kit - for Proflame 2 Appliances** (Control your fireplace with your smartphone - App required)
REPLACEMENT BURNER ASSEMBLY / BURNER	
24IDV-200A	H-Burner (For use on IDV24 only)

24IDV-BLP	Millivolt Burner Assembly-Propane c/w Valve System
24IDV-BN	Millivolt Burner Assembly- Natural Gas c/w Valve System
24IDV-BLPE	Proflame 1 Burner Assembly-Propane c/w Valve System
24IDV-BNE	Proflame 1 Burner Assembly-Natural Gas c/w Valve System
24IDV-BLPE2	Proflame 2 Burner Assembly-Propane c/w Valve System
24IDV-BNE2	Proflame 2 Burner Assembly-Natural Gas c/w Valve System
VALVE SYSTEM PARTS	
1001-P633SI	SIT Millivolt Valve Nova LP Hi/Lo
1003-P651SI	SIT Millivolt Valve Nova LP Hi/Lo
1001-P634SI	SIT Millivolt Valve Nova NG Hi/Lo
1003-P652SI	SIT Millivolt Valve Nova NG Hi/Lo
1006-P003SI	SIT Proflame 1 Valve Nova LP Hi/Lo
1006-P002SI	SIT Proflame 1 Valve Nova NG Hi/Lo
1005-P002SI	SIT Proflame 2 Valve Nova LP
1005-P001SI	SIT Proflame 2 Valve Nova NG
PILOT ASSEMBLIES	
1001-P713SI	SIT Millivolt Pilot Assembly LP
1001-P714SI	SIT Millivolt Pilot Assembly NG
1002-P047SI	SIT IPI Pilot Assembly LP
1002-P033SI	SIT IPI Pilot Assembly NG
MISCELLANEOUS PARTS	
1000-150 GE	#Silicone GE Red IS806 #736
1000-150 MP	#Hi-Temp Millpac Sealant 840099
1000-214	#Piezo-Igniter 1244-17 MARK 21
1000-215	#PAL Nut (18mm x 1.5mm) Blk (1364.03)
1000-216	Gold Contact ON/OFF Switch
1000-255	#Orifice Brass (State Size)
350-EMBER	#Embers
24IDV-310	#Ceramic Robax Glass 22.675” X 12.841”
2000-080	#Thermodisc 2450 (For Blower)
26IDV-P260	Blower Motor (Replacement) QLK45
2000-085	#Control Variable Speed KBWC-13BV
24IDV-110A	#Adapter Plate Complete –IDV24
33IDV-123	#Replacement Spring for Door Latch (Lower)
36HB-123	#Replacement Spring for Door Latch (Upper)
26IDV-123A	Latch Assembly (Lower)
34IDV-123AU	Latch Assembly (Upper)
OFP42SA	Spark Assist (Millivolt)
FP15GC	Stainless Steel Gas Connector
PARTS FOR IDV24 VENTING	
IDVVT36	Vertical Termination – Collinear 3”/3”
IDVFK25	3” Diameter [2Ea] Unexpanded 25ft Flex Pipe, Screws/Washers, Millpac
IDVLCP	Lower Chase Sealant Plate
ZDV3FC	Flex Connectors 3” Diameter
I23FAK-KIT	2/3 Venting Adapter Kit
I23FK25	2/3 Flex Venting Kit – 25 feet

LIMITED LIFETIME WARRANTY

This Limited Lifetime Warranty applies only while the unit remains at the site of the original installation and only if the unit is installed inside the continental United States, Alaska, Hawaii, and Canada. The warranty applies only if the unit is installed and operated in accordance with the printed instructions and in compliance with applicable installation and building codes and good trade practices.

BASIC ONE YEAR WARRANTY

During the first year after installation of the appliance, we will provide a replacement for any component part of your unit found to be defective in materials or workmanship, including labour costs. Repair work requires prior approval by Kingsman, labour costs are based on a predetermined rate schedule and any repair work must be done through an authorized Kingsman dealer.
(Excluded Components: Accent Light Bulbs, Gasketing and Paint)

LIMITED LIFETIME WARRANTY

The heat exchanger, combustion chamber and burner of every Kingsman product excluding the Outdoor Firepit are warranted against materials or workmanship during the period the product is owned by the original owner. The part to be replaced must be returned to our distributor in exchange for the replacement part. Any labor, material, freight and/or handling charges associated with any repair or replacement pursuant to this Limited Lifetime Warranty will not be covered by this warranty.

GENERAL TERMS

In lieu of providing a replacement part, we may, at our option, provide the distributor's component purchase price from us or a credit equal to the distributor's component purchase price from us toward the purchase of any new unit which we distribute. If a credit is given in lieu of a replacement part, the rating plate from the unit being replaced must be submitted on a warranty claim, and the unit being replaced must be made available to our distributor for disposition.

In establishing the date of installation for any purpose, including determination of the starting date for the term of this Limited Lifetime Warranty, reasonable proof of the original installation date must be presented*, otherwise the effective date will be based upon the date of manufacture plus thirty (30) days.

We will not be responsible for and you, the user, will pay for: (a) damages caused by accident, abuse, negligence, misuse, riot, fire, flood, or Acts of God (b) damages caused by operating the unit where there is a corrosive atmosphere containing chlorine, fluorine, or any other damaging chemicals (other than in a normal residential environment) (c) damages caused by any unauthorized alteration or repair of the unit affecting its stability or performance (d) damages caused by improper matching or application of the unit or the unit's components (e) damages caused by failing to provide proper maintenance and service to the unit (f) any expenses incurred for erecting, disconnecting or dismantling the unit (g) parts or supplies used in connection with service or maintenance (h) damage repairs, inoperation or inefficiency resulting from faulty installation or application (i) electricity or fuel costs or any increase in electricity or fuel cost whatsoever including additional or unusual use of supplemental electric heat.

We shall not be liable for any incidental, consequential, or special damages or expenses in connection with any use or failure of this unit. We have not made and do not make any representation or warranty of fitness for a particular use or purpose, and there is no implied condition of fitness for a particular use or purpose. We make no express warranties except as stated in this Limited Lifetime Warranty. No one is authorized to change this Limited Lifetime Warranty or to create for us any other obligation or liability in connections with this unit. Any implied warranties shall last for one year after the original installation. Some states and provinces do not allow the exclusion or limitation of incidental or consequential damages or do not allow limitations on how long an implied warranty or condition lasts, so the above limitations or exclusions may not apply to you. The provisions of this limited warranty are in additions to and not a modification of or subtraction from any statutory warranties and other rights and remedies provided by law.

Save this certificate. It gives you specific legal rights, and you may also have other rights which may vary from state to state and province to province.

In the event your unit needs servicing, contact your dealer or contractor who installed or serviced your unit. When requesting service, please have the model and serial number from each unit readily available. If your dealer needs assistance, the distributor is available for support and we, in turn support the distributor's efforts.

Fill in the installation date and model and serial numbers of the unit in the space provided below and retain this limited warranty for your files.

Model No. _____ **Serial No.** _____ **Date installed** _____

Dealer or Contractor Name: _____

*To receive advantage of your warranty, you must retain the original records that can establish the installation date of your unit.

The Ultimate in Design, Engineering & Quality