Owner's Manual

Care and Operation

INSTALLER: Leave this manual with the appliance.
CONSUMER: Retain this manual for future reference.

***NOTICE: DO NOT** discard this manual!*

outdoor lifestyles
by hearth & home technologies®

Model:
ODLANAIGST-48
ODLANAIGST-60

GAS-FIRED
C UL US
LISTED
MH61458

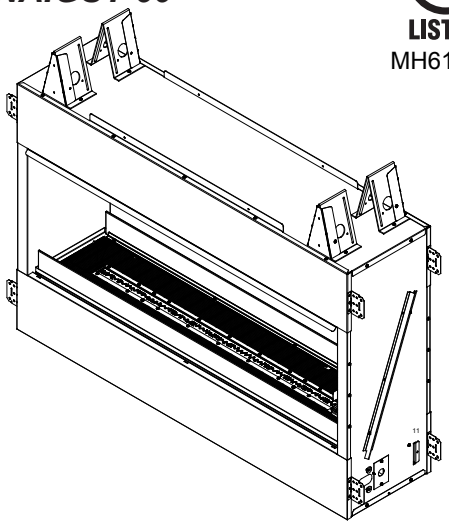

WARNING! Risk Of Fire!

Do not install glass doors on this appliance.

Glass doors could cause overheating of adjacent structures.

DANGER

FIRE OR EXPLOSION HAZARD

If you smell gas:

- Shut off gas to the appliance.
- Extinguish any open flame.
- If odor continues, leave the area immediately.
- After leaving the area, call your gas supplier or fire department.
- Failure to follow these instructions could result in fire or explosion, which could cause property damage, personal injury, or death.

WARNING

Do not store or use gasoline or other flammable vapors and liquids in the vicinity of this or any other appliance

An LP-cylinder not connected for use shall not be stored in the vicinity of this or any other appliance.

WARNING: For outdoor use only.
Installation and service must be performed by a qualified installer, service agency, or the gas supplier.

WARNING: Improper installation, adjustment, alteration, service or maintenance can cause injury or property damage. Read the installation, operating and maintenance instructions thoroughly before installing or servicing this equipment.

WARNING: If the information in this manual is not followed exactly, a fire or explosion may result causing property damage, personal injury, or loss of life.

DANGER

CARBON MONOXIDE HAZARD

This appliance can produce carbon monoxide which has no odor.

Using it in an enclosed space can kill you.

Never use this appliance in an enclosed space such as a camper, tent, car or home.

⚠Safety Alert Key:

- ***DANGER!*** *Indicates a hazardous situation which, if not avoided will result in death or serious injury.*
- ***WARNING!*** *Indicates a hazardous situation which, if not avoided could result in death or serious injury.*
- ***CAUTION!*** *Indicates a hazardous situation which, if not avoided, could result in minor or moderate injury.*
- ***NOTICE:*** *Used to address practices not related to personal injury.*

Table of Contents

1 Welcome
A. Congratulations 3
B. Limited Warranty.....4
2 Product Specific Information
A. Appliance Certification 6
B. BTU Specifications 6
3 Important Safety and Operating Information
A. Appliance Safety.....7
B. General Operating Parts.....8
C. Fuel Specifications 8
D. Before Lighting Appliance.....8
E. Lighting Instructions (IPI).....9
F. Appliance Break-in 10
G. Wall Control.....10
H. LED Control.....10
4 Maintenance and Service
A. Maintenance – Frequency and Tasks..... 11
B. Maintenance Tasks – Homeowner 11
C. Maintenance Tasks – Qualified Service Technician 12
5 Frequently Asked Questions and Troubleshooting
A. Frequently Asked Questions.....13
B. Troubleshooting 13
C. Troubleshooting – Screen/LEDs/Control Panel 15
D. Accessing the LEDs 16
6 Reference Materials
► A. Accessories 17
B. Service Parts 18
C. Contact Information 24

1 Welcome

A. Congratulations

Congratulations on selecting an Outdoor Lifestyles gas appliance, an elegant and clean alternative to wood burning appliances. The Outdoor Lifestyles gas appliance you have selected is designed to provide the utmost in safety, reliability, and efficiency.

As the owner of a new appliance, you'll want to read and carefully follow all of the instructions contained in this owner's manual. Pay special attention to all cautions and warnings.

This owner's manual should be retained for future reference. We suggest that you keep it with your other important documents and product manuals. The information contained in this owner's manual, unless noted otherwise, applies to all models and gas control systems.

Your new Outdoor Lifestyles gas appliance will give you years of durable use and trouble-free enjoyment. Welcome to the Outdoor Lifestyles family of appliance products!

Local Dealer Information

Dealer: *Fill in your name, address, phone number and email information in the space provided.*

Dealer Name: _____
Address: _____
_____
Phone Number: _____
Email: _____

Appliance Information:
Brand: _____ *Model Name:* _____
Serial Number: _____ *Date Installed:* _____

Listing Label Information/Location

The model information regarding your specific appliance can be found on the rating plate usually located in the control area of the appliance.

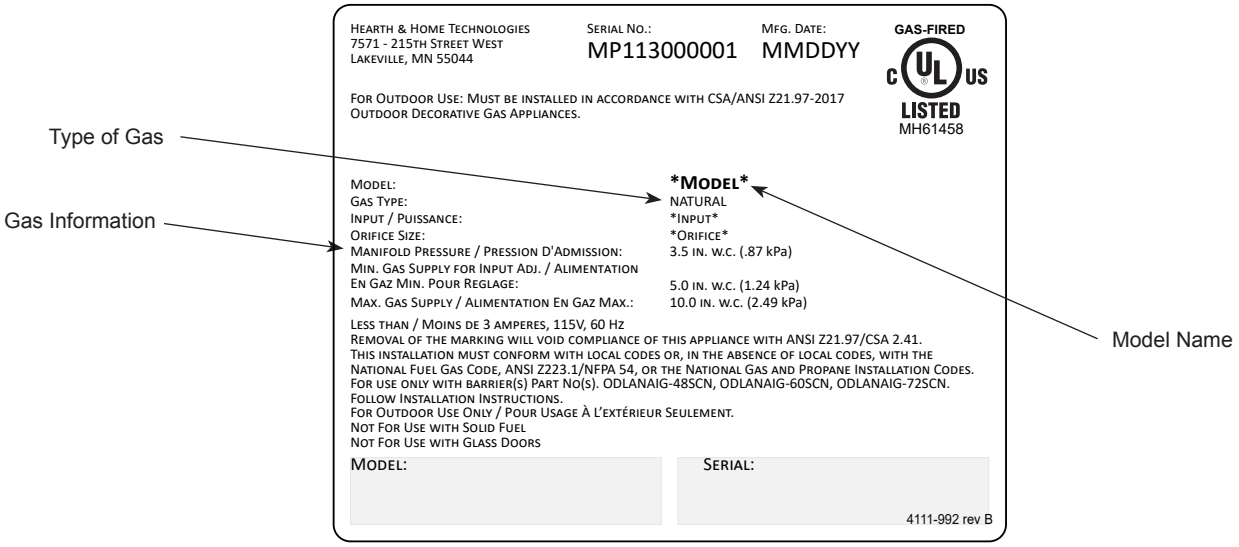

B. Limited Warranty

Outdoor Lifestyles by Hearth & Home Technologies™
Limited Lifetime Warranty

Hearth & Home Technologies ("HHT") extends the following warranty for all Outdoor Lifestyles by HHT™ brand products ("Products") that are purchased from an HHT authorized dealer.

WARRANTY COVERAGE:

HHT warrants to the original owner of the Product at the site of installation, and to any transferee taking ownership of the Product at the site of installation within one year following the date of original purchase, that the Product will be free from defects in materials and workmanship at the time of manufacture. After installation, if covered components manufactured by HHT are found to be defective in materials or workmanship during the applicable warranty period, HHT will, at its option, repair or replace the covered components. This warranty is subject to conditions, exclusions and limitations as described below.

WARRANTY PERIOD:

The warranty period begins on the earlier of: (i) the date of invoice for the Product;
(ii) in the case of new home construction, the date of first occupancy of the residence or six months after the date of sale of the Product by an HHT authorized dealer, whichever occurs first; or (iii) the date 24 months following the date of Product shipment from HHT, regardless of the invoice or occupancy date.

WARRANTY CONDITIONS:

- The Limited Lifetime Warranty covers Products that are purchased through a HHT authorized dealer or distributor. A list of HHT authorized dealers is available on the HHT branded websites.
- This warranty is only valid while the Product remains at the site of original installation.
- Contact your installing dealer for warranty service. If the installing dealer is unable to provide necessary parts, contact the nearest HHT authorized dealer. Additional service fees may apply if you are seeking warranty service from a dealer other than the dealer from whom you originally purchased the Product.
- Check with your dealer in advance for any costs to you when arranging a warranty call. Travel and shipping charges for parts are not covered by this warranty.
- The Product body, metal firebox and heat exchanger carry the Limited Lifetime Warranty from the date of installation.
- The following components do not carry the Limited Lifetime Warranty but are warranted as follows:
  - One Year from Date of Installation:
    - Gas and Electrical Components or Gaskets
    - Nickel Plated Materials
      - Excludes tarnishing
    - Glass Breakage, Logs/Refractory/Glass Panels due to thermal breakage
      - Surface, hairline cracks, scratches and slight color changes are not covered
    - Venting, optional accessories, optional glass doors
    - Labor Associated with Warranty Service Work

WARRANTY EXCLUSIONS:

This warranty does not cover the following:

- Changes in surface finishes as a result of normal use. As a heating appliance, some changes in color of interior and exterior surface finishes may occur; this is not a flaw and not covered under warranty.
- Damage to printed, plated, or enameled surfaces caused by fingerprints, accidents, misuse, scratches, melted items, or other external sources and residues left on surfaces from the use of abrasive cleaners or polishes.
- Repair or replacement of parts that are subject to normal wear and tear during the warranty period. These parts include: paint, firebricks, grates, flame guides and the discoloration of glass.
- Minor expansion, contraction, or movement of certain parts causing noise. These conditions are normal and complaints related to this noise are not covered by this warranty.

B. Limited Warranty *(continued)*

- Damages resulting from: (1) failure to install, operate, or maintain the Product in accordance with the installation instructions, operating instructions, and listing agent identification label furnished with the Product; (2) failure to install the Product in accordance with local building codes; (3) shipping or improper handling; (4) improper operation, abuse, misuse, continued operation with damaged, corroded or failed components, accident, or incorrectly performed repairs; (5) inadequate ventilation, negative pressure or environmental conditions, including, without limitation: hail, snow, ice, fallen branches, flooding, water damage and fading of color; (6) use of fuels other than those specified in the operating instructions; (7) installation or use of components not supplied with the Product or any other components not expressly authorized and approved by HHT; (8) modification of the Product not expressly authorized and approved by HHT in writing; and/or (9) interruptions or fluctuations of electrical power supply to the Product.
- Non-HHT venting components, hearth components or other accessories used in conjunction with the Product.
- Any part of a pre-existing fireplace system in which an insert or a decorative gas appliance is installed.
- The Product's capability to heat the desired space. Information is provided to assist the consumer and the dealer in selecting the proper appliance for the application. Consideration must be given to the Product's location and configuration and environmental conditions.

This warranty is void if:

- The Product has been over-fired or operated in atmospheres contaminated by chlorine, fluorine, or other damaging chemicals. Over-firing can be identified by, but not limited to, warped plates or tubes, rust colored cast iron, bubbling, cracking and discoloration of steel or enamel finishes and cracking or spalling of refractory or cementitious materials.
- The Product is subjected to prolonged periods of dampness, condensation, ice or snow.
- There is any damage to the Product or other components due to water or weather damage which is the result of, but not limited to, improper chimney or venting installation.

LIMITATIONS OF LIABILITY:

Repair or replacement in accordance with the provisions of this warranty will be the owner's exclusive remedy for and will constitute HHT's sole obligation under this warranty, under any other warranty (express or implied), or in contract, tort or otherwise; provided, however, that if HHT is unable to provide repair or replacement in an expedient and cost effective manner, HHT may discharge all such obligations by refunding the purchase price of the Product. No employee, agent, dealer, or other person is authorized to give any warranty on behalf of HHT. TO THE EXTENT ALLOWED BY LAW, HHT MAKES NO OTHER WARRANTY, EXPRESS OR IMPLIED, INCLUDING ANY WARRANTY OF MERCHANTABILITY OR FITNESS FOR A PARTICULAR PURPOSE. HHT WILL NOT BE LIABLE FOR ANY CONSEQUENTIAL OR INCIDENTAL DAMAGES ARISING OUT OF DEFECTS IN OR USE OF THE PRODUCTS. Some states do not allow exclusions or limitation of incidental or consequential damages, so these limitations may not apply to you. This warranty gives you specific rights; you also may have other rights, which vary from state to state. The duration of any implied warranty is limited to the duration of the warranty period specified herein.

2 Product Specific Information

A. Appliance Certification

***Model:* ODLANAIGST-48, ODLANAIGST-60**
Laboratory: Canadian Standards Association (CSA)
Type: Outdoor Decorative Gas Appliances
Standard: ANSI Z221.97-2017, CSA 2.41-2017

This product is listed to ANSI standards for "Outdoor Decorative Gas appliances" and "Gas Fired Appliances for Use at High Altitudes".

Notice: *This installation must conform with local codes. In the absence of local codes you must comply with the National Fuel Gas Code, ANSI Z223.1- latest edition in the U.S.A. and the CAN/CGA B149 Installation codes in Canada.*

When an appliance is connected to a fixed piping system, the installation must conform with local codes, or in the absence of local codes with the ***National Fuel Gas Code, ANSI Z223.1/NFPA 54, or International Fuel Gas Code.***

⚠ WARNING: This product and the fuels used to operate this product (liquid propane or natural gas), and the products of combustion of such fuels, can expose you to chemicals including benzene, which is known to the State of California to cause cancer and reproductive harm. For more information go to: www.P65Warnings.ca.gov.

B. BTU Specifications

Model	Gas Type	Max Input BTU	Orifice Size
ODLANAIGST-48	Natural	55,000	#26 (.147) 3.73 mm
	Propane	55,000	#42 (.093) 2.36 mm
ODLANAIGST-60	Natural	65,000	#23 (.154) 3.91 mm
	Propane	65,000	#39 (.099) 2.51 mm

Installation and service of this appliance should be performed by qualified personnel. Hearth & Home Technologies recommends HHT Factory Trained or NFI certified professionals.

hearthED FACTORY TRAINING Fuel Your Fire

NFI NATIONAL FIREPLACE INSTITUTE A CERTIFICATION AGENCY

NOTE: Installation and repair should be done by a qualified service person. The appliance should be inspected before use and at least annually by a qualified service person. More frequent cleaning may be required as necessary. It is imperative that the control compartment, burners, and circulating air passageways of the appliance are kept clean.

3 Important Safety and Operating Information

A. Appliance Safety

WARNING! DO NOT operate appliance before reading and understanding operating instructions. *Failure to operate appliance according to operating instructions could cause fire or injury.*

WARNING

HOT SCREENS WILL CAUSE BURNS.
DO NOT TOUCH APPLIANCE UNTIL COOLED.
NEVER ALLOW CHILDREN TO TOUCH APPLIANCE.

- Keep children away.
- CAREFULLY SUPERVISE children in same room as appliance.
- Alert children and adults to hazards of high temperatures.

High temperatures may ignite clothing or other flammable materials.

- Clothing, furniture, draperies and other flammable materials must not be placed on or near the appliance.

Young children should be carefully supervised when they are in the same room as the appliance. Toddlers, young children and others may be susceptible to accidental contact burns.

- A physical barrier is recommended if there are at risk individuals in the house.
- To restrict access to an appliance, install an adjustable safety gate to keep toddlers, young children and other at risk individuals out of the room and away from hot surfaces.
- Install wall switch out of reach of children.
- Never leave a child alone near a hot appliance, whether operating or cooling down.
- Teach children to NEVER touch the appliance.
- Consider not using the appliance when children will be present.

Contact your dealer for more information, or visit: www.hpba.org/safety-information.

To prevent unintended operation when not using your appliance for an extended period of time (winter months, vacations, trips, etc:)

- Turn off wall controls.
- Turn off gas shutoff valve.
- Turn off GFCI protected circuit breaker.

Screen

This appliance has an optional screen cover. This cover is designed to protect the inside of the appliance from trash or other debris buildup when the appliance is not in use (sticks, leaves, etc.) The appliance may be operated with the optional screen installed.

Clear Space

WARNING! DO NOT place combustible objects in front of the appliance. *High temperatures could start a fire. See Figure 3.1 Avoid placing candles and other heat-sensitive objects on mantel or hearth. Heat could damage these objects.*

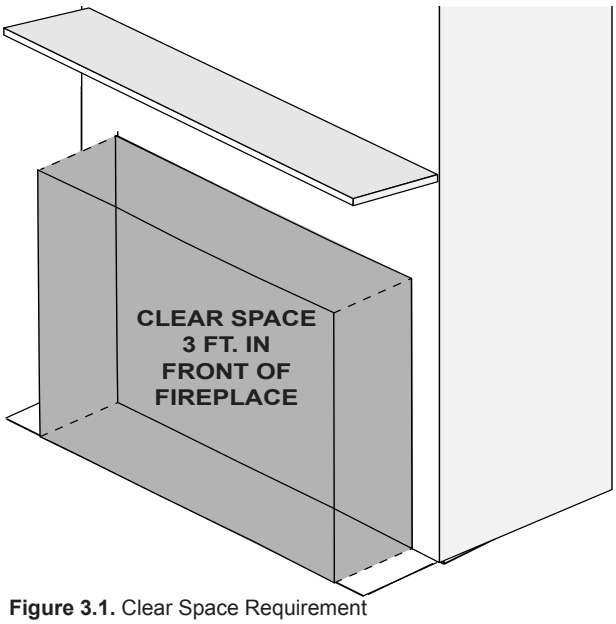

Figure 3.1. Clear Space Requirement

Over Firing

The appliance is considered to be over firing if the flames are contacting the top of the firebox. Call a qualified service technician to service the appliance.

B. General Operating Parts

Figure 3.2 references the general operating parts of the appliance and the section of this manual in which they are discussed.

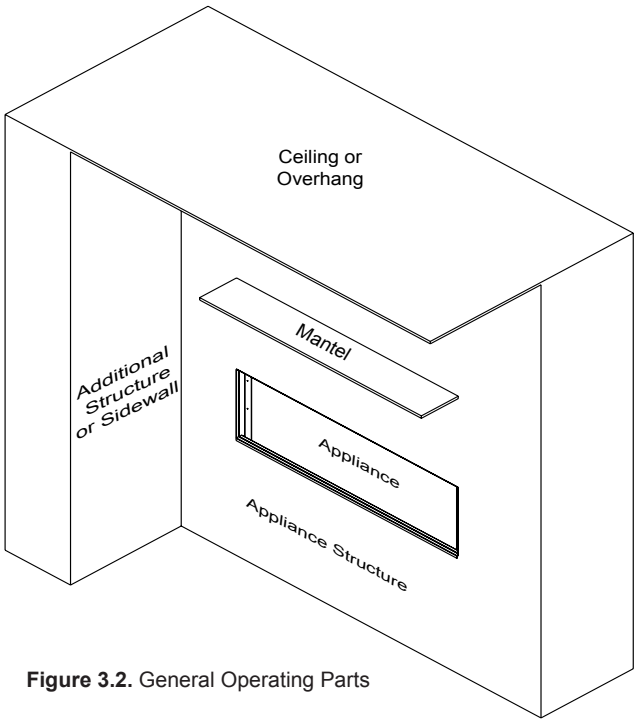

Figure 3.2. General Operating Parts

C. Fuel Specifications

WARNING! RISK OF FIRE OR EXPLOSION! *Appliance must be set up for compatible gas type!*

- This appliance is designed to operate on either natural gas or propane. Make sure the appliance is compatible with gas type selected for installation site.
- Conversions must be made by a qualified service technician using Hearth & Home Technologies specified and approved parts.

D. Before Lighting Appliance

Before operating this appliance for the first time, **have a qualified service technician:**

- Verify all shipping materials have been removed from inside and/or underneath the firebox.
- Review proper placement of media.
- Check the wiring.
- Ensure that there are no gas leaks.
- Remove all stainless steel coating material.

E. Lighting Instructions (IPI)

Lighting instructions may be found on the inside of the control compartment.

FOR YOUR SAFETY READ BEFORE LIGHTING

WARNING: If you do not follow these instructions exactly, a fire or explosion may result causing property damage, personal injury or loss of life.

A. This appliance is equipped with an intermittent pilot ignition (IPI) device which automatically lights the burner. **DO NOT** try to light the burner by hand.

B. BEFORE LIGHTING, smell all around the appliance area for gas. Be sure to smell next to the floor because some gas is heavier than air and will settle on the floor.

WHAT TO DO IF YOU SMELL GAS

- **DO NOT** try to light any appliance.
- **DO NOT** touch any electric switch; do not use any phone in your building.
- Immediately call your gas supplier from a neighbor's phone. Follow the gas supplier's instructions.
- If you cannot reach your gas supplier, call the fire department.

C. DO NOT use this appliance if any part has been under water. Immediately call a qualified service technician to inspect the appliance and to replace any part of the control system and any gas control which has been under water.

WARNING:

DO NOT CONNECT LINE VOLTAGE (110/120 VAC OR 220/240 VAC) TO THE CONTROL VALVE.

Improper installation, adjustment, alteration, service or maintenance can cause injury or property damage. Refer to the owner's information manual provided with this appliance.

This appliance needs fresh air for safe operation and must be installed so there are provisions for adequate combustion and ventilation air.

If not installed, operated, and maintained in accordance with the manufacturer's instructions, this product could expose you to substances in fuel or fuel combustion which are known to the State of California to cause cancer, birth defects, or other reproductive harm.

Keep burner and control compartment clean. See installation and operating instructions accompanying appliance.

CAUTION:

Hot while in operation. **DO NOT** touch. Keep children, clothing, furniture, gasoline and other liquids having flammable vapors away.

NOT FOR USE WITH SOLID FUEL

For use with natural gas and propane. A conversion kit, as supplied by the manufacturer, shall be used to convert this appliance to the alternate fuel.

For assistance or additional information, consult a qualified installer, service agency or the gas supplier.

For additional information on operating your Hearth & Home Technologies appliance, please refer to www.appliances.com.

LIGHTING INSTRUCTIONS (IPI)

1. This appliance is equipped with an ignition device which automatically lights the burner. **DO NOT** try to light the burner by hand.

GAS VALVE

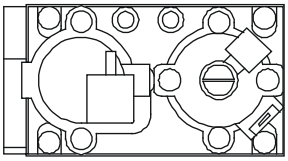

2. Wait five (5) minutes to clear out any gas. Then smell for gas, including near the floor. If you smell gas, STOP! Follow "B" in the Safety Information located on the left side of this label. If you do not smell gas, go to next step.
3. To light the burner:

   Equipped with wall control: Press ON button.
4. If the appliance does not light after three tries, call your service technician or gas supplier.

TO TURN OFF GAS TO APPLIANCE

1. Equipped with wall control: Press OFF button.
2. Service technician should turn off electric power to the control when performing service.

Final inspection by _____

F. Appliance Break-in

Initial Break-in Procedure

When you light the appliance, you may notice that it produces heat which does have an associated odor or smell. This appliance should be run three to four hours on the initial start-up. Turn it off and let it cool completely.

WARNING! Risk of Fire or Burns! *Provide adequate clearance for service access.* ***Due to high temperatures, the appliance should be located out of traffic and away from furniture and draperies.***

WARNING! DO NOT *place combustible objects in front of the appliance. High temperatures could start a fire.*

G. Wall Control

Wall Control Operation

The Lanai series appliance comes standard with a rocker switch and two (2) button wall control panel . See Figure 3.3

On/Off – This switch toggles the On/Off function of the main burner

- On Position: Appliance will ignite main burner and run continuously (wall rocker switch).
- Off Position: Appliance main burner off

H. LED Control

- Multi-colored LED lights – These two (2) buttons turn LEDs ON (HI/MED/LO) and OFF function and cycle through the color selection.

1. **Color Fade** – This setting will cycle through the colors shown below at a normal rate.
2. **Color Fade Slow** – This setting will cycle through the colors shown below at a slower rate.
3. **Pause Color** – This setting will pause the slow color fade at any color in the color wheel.
4. **Solid Color Selection** – This setting will cycle through each color in order:

- Blue
- Violet
- Red
- Yellow
- Green
- Cyan
- White

CAUTION! Risk of Electric Shock! *Avoid touching wires and electrical components in appliance control cavity.*

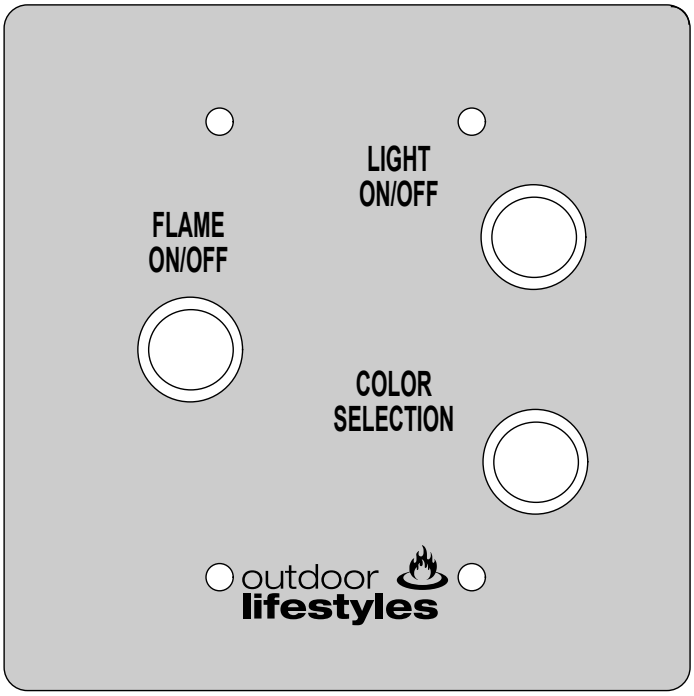

Figure 3.3. Wall Control Switch

4 Maintenance and Service

Any safety screen or guard removed for servicing must be replaced prior to operating the appliance.

When properly maintained, your appliance will give you many years of trouble-free service. Contact your dealer to answer questions regarding proper operation, troubleshooting and service for your appliance. Visit www.hearthnhome.com to locate a dealer. We recommend annual service by a qualified service technician.

A. Maintenance – Frequency and Tasks

Task:	Frequency:	To be completed by:
Optional Screen	Annually	Homeowner
Wall Control	Seasonally	
Burner ignition and operation	Annually	Qualified Service Technician

B. Maintenance Tasks – Homeowner

Installation and repair should be done by a qualified service technician only. The appliance should be inspected before use and at least annually by professional service person.

The following tasks may be performed annually by the homeowner. If you are uncomfortable performing any of the listed tasks, please call your dealer for a service appointment.
More frequent cleaning may be required due to excessive dirt, dust, leaves, insects etc. It is imperative that control compartments, burners and circulating air passageways of the appliance be kept clean. Any safety screen, guard or barrier removed for servicing the appliance must be replaced prior to operating the appliance.
CAUTION! Risk of Burns! *The appliance shall be turned off and cooled before servicing.*

Optional Screen

Frequency: Annually
By: Homeowner
Tools needed: Protective gloves

- Assess condition of cover/screen and replace as necessary.
- Inspect for scratches, dents or other damage that can lead to rust when exposed to weather. Repair as necessary.
- Vacuum and dust surfaces.

Wall Control

Frequency: Seasonally
By: Homeowner
Tools needed: None

- Verify operation of controls
  - On/Off
  - LED lights

Cleaning the Media

Caution! Make sure the media is cool to the touch before removing media from the appliance

During shipment of the media, dust and debris can accumulate. It is recommended that the media be rinsed thoroughly with water to remove dust and small particles. An easy method to clean the media is to place the media into a pail and rinse thoroughly. Spread the media out over paper towels and allow the media to dry before installing them into the appliance.

Cleaning the Appliance

Caution! Before cleaning make sure the appliance is cool and the power to the appliance is turned off.

Using a stainless steel cleaner. Apply to a terry cloth and wipe appliance following the grain of the stainless. Do not spray cleaner directly into the appliance. Use caution while cleaning the mesh as the edges are sharp and may tear the cleaning cloth. For cleaning the LED strips a terry cloth with clean water is all that is required.

C. Maintenance Tasks – Qualified Service Technician

The following tasks must be performed by a qualified service technician.
NOTICE: *Soot may accumulate on the pilot assembly and the area above the firebox opening. Periodic cleaning may be required.*

Burner Ignition and Operation

Frequency: Annually
By: Qualified Service Technician
Tools needed: Protective gloves, vacuum cleaner, whisk broom, flashlight, voltmeter, indexed drill set and a manometer.

- Check for smooth lighting and ignition carryover to all ports. Verify that there is no ignition delay.
- Inspect for lifting or other flame problems.
- Verify manifold and inlet pressures. Adjust regulator as required.
- Inspect pilot flame pattern and strength. Clean or replace orifice spud as necessary.
- Inspect pilot flame sensing rod for soot, corrosion and deterioration. Polish with fine steel wool or replace as required.
- Verify that there is not a short in flame sense circuit by checking continuity between pilot hood and flame sensing rod. Replace pilot as necessary.

5 Frequently Asked Question and Troubleshooting

A. Frequently Asked Questions

ISSUE	SOLUTION
Odor from appliance	When first operated, this appliance may release an odor for the first several hours. This is caused by the burning off of any oils remaining from manufacturing. Odor may also be released from finishing materials and adhesives used around the appliance.
Metallic noise	Noise is caused by metal expanding and contracting as it heats up and cools down, similar to the sound produced by a furnace or heating duct. This noise does not affect the operation or longevity of the appliance.
Wall above appliance feels hot to the touch	No action is necessary. This appliance ships with a non-combustible material. Specifications of the non-combustible material are listed in the Installer's Manual for this appliance.

Contact your dealer for additional information regarding operating and troubleshooting. Visit www.hearthnhome.com to locate a dealer

B. Troubleshooting

With proper installation, operation and maintenance your gas appliance will provide years of trouble-free service. If you do experience a problem, this troubleshooting guide will assist a qualified service technician in the diagnosis of a problem and the corrective action to be taken. This troubleshooting guide can only be used by a qualified service technician. Contact a dealer to arrange a service call by a qualified service technician.

IntelliFire™ Ignition System

SYMPTOM	POSSIBLE CAUSE	CORRECTIVE ACTION
Pilot Won't light. The ignition/module makes noise, but no spark.	Incorrect Wiring	Verify "I" wire (orange) for ignitor is connected to correct terminals on module and pilot assembly.
	Loose connections or electrical shorts in the wiring.	Verify no loose connections or electrical shorts in wiring from module to pilot assembly. Verify connections underneath pilot assembly are tight; also verify igniter and flame sense wires are not grounding out to metal chassis, pilot burner, pilot enclosure, mesh screen if present, or any other metal object.
	Ignitor gap is too large	Verify gap of igniter to right side of pilot hood. The gap should be approximately .17 in. or 1/8 in. (3 mm).
Pilot won't light. There is no noise or spark,	No power, transformer installed incorrectly.	Verify that transformer is installed and plugged into module. Check voltage of transformer at connection to module. Acceptable readings of a good transformer are between 3.2 and 2.8 volts AC.
	A shorted or loose connection in wiring configuration or wire harness.	Remove and reinstall the wiring harness that plugs into module. Verify there is a tight fit. Verify pilot assembly wiring to module. Remove and verify continuity of each wire in wiring harness. Replace any damaged components.
	Junction box Wiring	Verify that 110-120 VAC power is "ON" to junction box.
	Module not grounded	Verify black ground wire from module wire harness is grounded to metal chassis of appliance.

IntelliFire™ Ignition System *(Continued)*

Pilot sparks, but will not light.	Gas supply.	Verify that incoming gas line ball valve is “open”. Verify that inlet pressure reading is within acceptable limits.
	Ignitor gap is too large.	Verify gap of igniter to right side of pilot hood. The gap should be approximately .17 in. or 1/8 in. (3 mm).
	Module is not grounded.	Verify module is securely grounded to metal chassis of appliance.
	Pilot valve solenoid	Verify that 1.5 to 1.8 VDC is supplied to pilot solenoid from module. If below 1.5 volts, replace module. If 1.5 volts or greater, replace valve.
Pilot lights but continues to spark, and burner will not ignite. (If the pilot continues to spark after the pilot flame has been lit, flame rectification has not occurred.)	A short or loose connection in flame sensing rod.	Verify all connections to wiring diagram in manual. Verify connections underneath pilot assembly are tight. Verify connections are not grounding out to metal chassis, pilot burner, pilot enclosure or screen if present, or any other metal object.
	Poor flame rectification or contaminated flame sensing rod.	Verify correct pilot orifice is installed and gas inlet is set to pressure specifications. Check pilot for soot. Clean if necessary.
	Module is not grounded.	Verify module is securely grounded to metal chassis of appliance. Verify that wire harness is firmly connected to the module.
	Damaged pilot assembly or contaminated flame sensing rod	Verify that ceramic insulator around the flame sensing rod is not cracked, damaged, or loose. Verify connection from flame sensing rod to white sensor wire. Polish flame sensing rod with fine steel wool to remove any contaminants that may have accumulated on flame sensing rod. Verify continuity with a multimeter with ohms set at lowest range. Replace pilot if any damage is detected.
	Module	Turn wall control to OFF position. Remove ignitor wire “I” from module. Turn wall control to ON position. If there is no spark at “I” terminal module must be replaced. If there is a spark at “I” terminal, module is fine.

C. Troubleshooting – Screen/LEDs/Control Panel

SYMPTOM	POSSIBLE CAUSE	CORRECTIVE ACTION
LED Lights will not turn on (Appliance or Control Panel)	No AC power to appliance	Check that GFCI breaker is operating as intended and is not tripped. Verify that AC power has been connected to the appliance. Ensure that both the 3V IPI control module power supply as well as the LED power supply are securely plugged into the appliance junction box.
	Faulty Wiring	Check appliance for loose/corroded connections or shorted wires.
	LED Failure	Check for 12VDC from power supply. If 12VDC is present, LED strip is bad.
	Power Supply Failure	Check for 12VDC. If no 12VDC is present, power supply is bad
	Control Panel Failure	Replace Switch assembly
Appliance does not turn on when Control Panel on/off switch is depressed	No AC power to appliance	Check that GFCI breaker is operating as intended and is not tripped. Verify that AC power has been connected to the appliance. Ensure that both the 3V IPI control module power supply as well as the 12V screen and LED power supply are securely plugged into the appliance junction box.
	Faulty Wiring	Check appliance for loose/corroded connections or shorted wires.
	Control Panel Failure	Replace Control Panel
	High temp limit switch tripped. (LP conversions only)	In certain high wind conditions the appliance will shut itself down to prevent damage to appliance. The appliance will reset itself as it cools down. To turn appliance back on, cycle the power switch to off and on again.

D. Accessing the LEDs

1. Turn off gas supply and disconnect main power to appliance before performing any maintenance.
2. Remove glass deflection shield and place on a clean flat surface.
3. Remove all media from hearth surface.
4. Remove screen to access LED strips inside LED channels.
5. To access LEDs, LED control module and power module, lift engine and place two legs provided under engine against lower front space at the bottom of the face, attaching at the top in slots suspending engine giving open access to all controls.

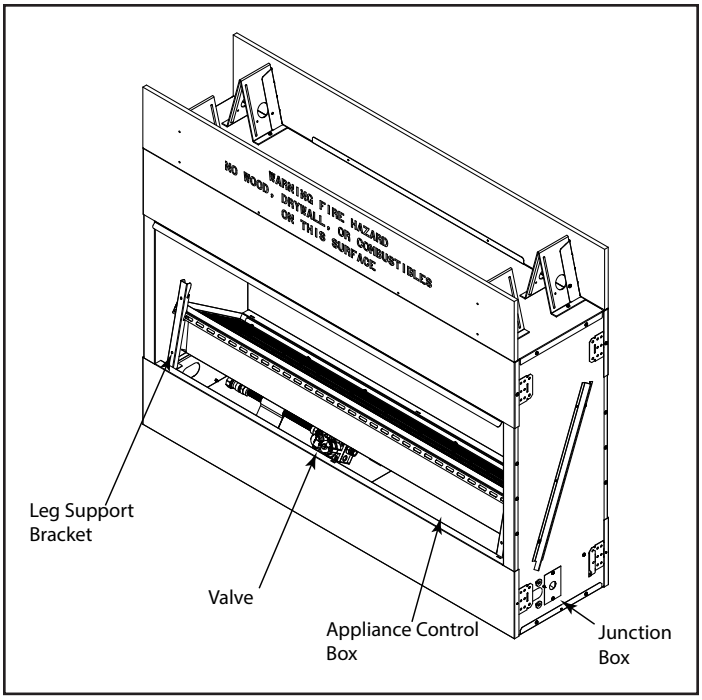

Figure 5.1. Appliance with engine lifted

6 Reference Materials

A. Accessories

Optional Media Kits

Several optional glass media kits are available for the Lanai series outdoor gas appliance. Contact your dealer for more information.

Media Kits: **NOTE:** Same media kit for ODLANAIGST-48 and ODLANAIGST-60

- Media-Ebony-48
- Media-Cobalt-48
- Media-Red-48
- Media-Amber-48

Optional Screen – ODLANAIG-48SCN, ODLANAIG-60SCN

- The Lanai series outdoor gas appliance offers a protection screen that is designed to protect the inside of the appliance from trash and other debris (sticks, leaves, etc.) while not in use. This appliance may be operated with the screen installed.

Optional Trim Kit – ODLANAIG-48CFT, ODLANAIG-60CFT

- The Lanai series outdoor gas appliance offers a trim kit that will allow the owner the option to cover the face of the appliance down to the firebox opening. This four (4) piece kit comes with an integrated eyebrow and 3/4” stainless steel lip that frames in the opening for a clean and seamless install.

Optional Drain Pan – ODLANAIG-48DP, ODLANAIG-60DP

- The Lanai series outdoor gas appliance offers a drain pan that is designed to channel moisture to the front or rear of the enclosure housing the appliance. This option will help ensure moisture does not become trapped inside the structure and helps to keep the area under the appliance free of standing water.

Optional Contemporary Driftwood Log Set - CDLS
Optional Stone Kit - STONEKIT

NOTE: CDLS and STONEKIT cannot be used in conjunction with each other.

CAUTION! ***Risk of Fire and Electric Shock!*** *Use ONLY Hearth & Home Technologies-approved optional accessories with this appliance. Using non-listed accessories could result in a safety hazard and will void the warranty.*

B. Service Parts

Service Parts

ODLANAIGST-48

48" Lanai Outdoor
See Through Gas Fireplace

Beginning Manufacturing Date: April 2021
Ending Manufacturing Date: Active

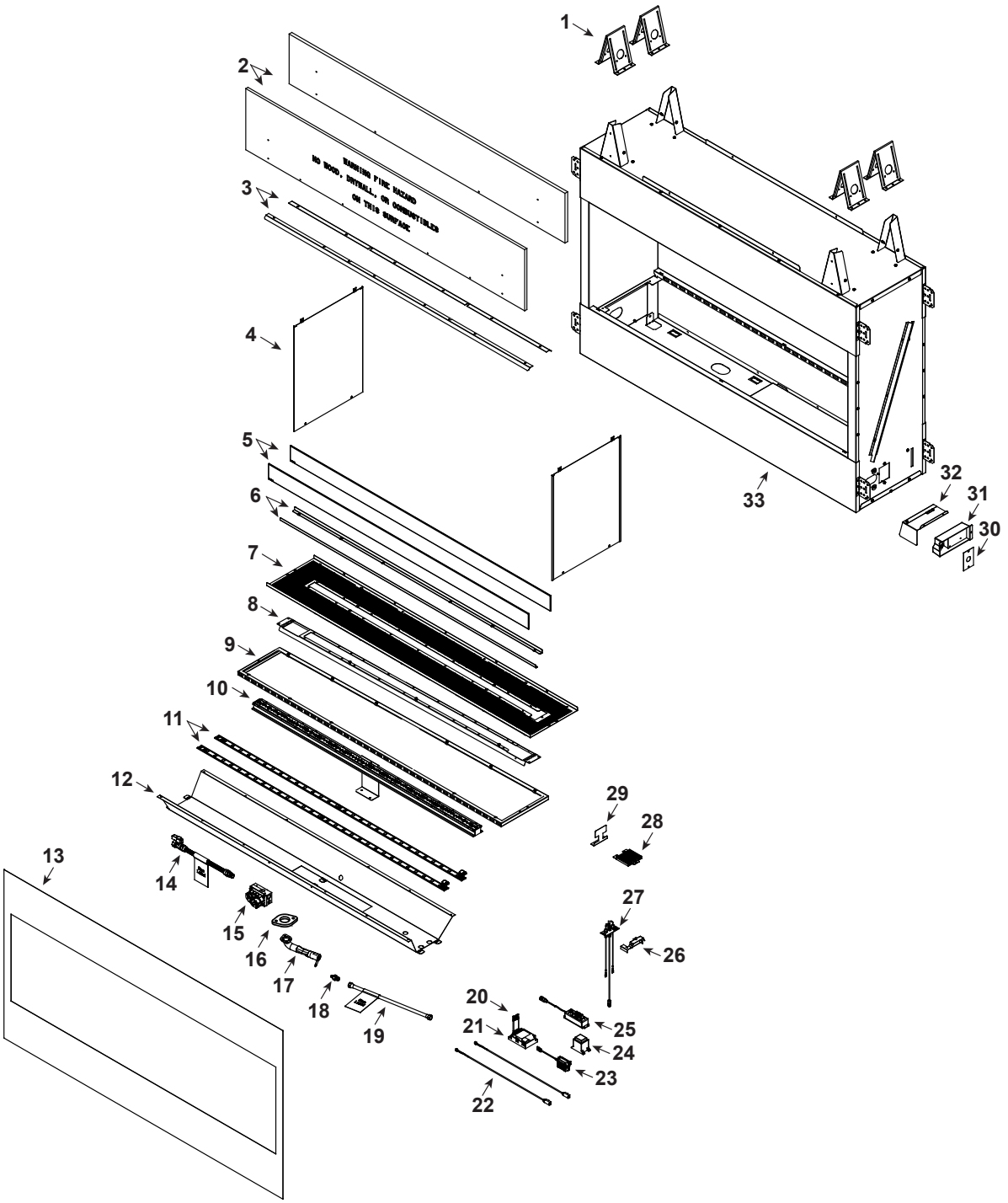

Part number list on following page.

Service Parts

ODLANAIGST-48

Beginning Manufacturing Date: April 2021
Ending Manufacturing Date: Active

IMPORTANT: THIS IS DATED INFORMATION. Parts must be ordered from a dealer or distributor. **Hearth and Home Technologies does not sell directly to consumers**. Provide model number and serial number when requesting service parts from your dealer or distributor.

ITEM	DESCRIPTION	COMMENTS	PART NUMBER	Stocked at Depot
1	Top Standoff	Qty 4 req	SRV11864	
2	Non-combustible Board	Qty 2 req	SRV4111-325	
3	Hood	Qty 2 req	SRV4111-135	
4	Overlay Kit		SRV4113-025	
5	Deflection Glass	Qty 2 req	SRV4111-301	
6	Glass Bracket	Qty 2 req	SRV4111-153	
7	Screen Cover		SRV4113-109	
8	Burner Bottom Inner		SRV4111-111	
9	Burner Bottom Outer		SRV4111-110	
10	Burner Assembly		SRV4111-021	Y
11	LED Light Strip	Qty 2 req	SRV4099-321	Y
12	LED Mount		SRV4111-113	
13	Overlay Complete		SRV4111-173	
14	Flex Line w/Shutoff		SRV302-320	Y
15	Valve Assembly, NG		SRV593-500	Y
16	Venturi Gasket		SRV4099-191	Y
17	Venturi Assembly		SRV4099-036	Y
18	Orifice Flare #26 NG		SRV4018-347	Y
19	Flex Gas Line 16”		SRV4121-006	Y
20	Wire Assembly		SRV593-590	Y
21	IPI Control Module		SRV593-592	Y
22	Wire LED Adapter	Qty 2 req	SRV4018-114	Y
23	3V Transformer		SRV593-593	Y
24	LED Power Module		20308559K	Y
25	LED Control Module		SRV4121-160	Y
26	Pilot Bracket		SRV4111-150	
27	Pilot Assembly, NG		SRV4018-065	Y
28	Pilot Shield		SRV4111-151	
29	Jig, Media Placement		SRV4111-152	
30	Cover Plate		SRV4604-103	
31	Junction Box		SRV4021-013	Y
32	Junction Box Cover Assembly		SRV4111-032	
33	Lower Face		SRV4111-133	

Additional service part numbers appear on following page.

Service Parts

ODLANAIGST-48

Beginning Manufacturing Date: April 2021
Ending Manufacturing Date: Active

IMPORTANT: THIS IS DATED INFORMATION. Parts must be ordered from a dealer or distributor. **Hearth and Home Technologies does not sell directly to consumers**. Provide model number and serial number when requesting service parts from your dealer or distributor.

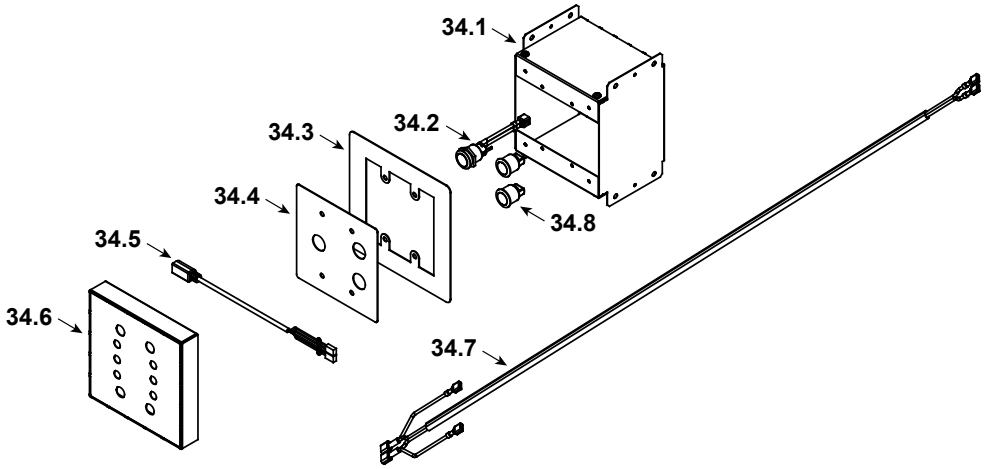

ITEM	DESCRIPTION	COMMENTS	PART NUMBER	Stocked at Depot
34	Remote Accessory Kit		SRV4111-033	
34.1	Switch Box Assembly		SRV4082-376	
34.2	Power Switch		SRV4121-136	**Y**
34.3	Trim Ring		SRV4018-336	
34.4	Switch Cover Plate		SRV4090-292	
34.5	Input Cable		20308587K	**Y**
34.6	Rock Template		SRV4608-250	
34.7	Wire Wall Switch Assembly		SRV4121-137	**Y**
34.8	LED Panel Switch	Qty 2 req	20308586K	**Y**
Conversion Kits				
	Conversion Kit Propane		LPK-ODLANAIG48	
	Orifice Flare		SRV4018-348	
	Pilot Orifice, Propane		SRV593-527	
	Regulator, Propane		SRVLPK-DXF	

C. Service Parts

Service Parts

ODLANAIGST-60

60” Lanai Outdoor
See Through Gas Fireplace

Beginning Manufacturing Date: April 2026
Ending Manufacturing Date: Active

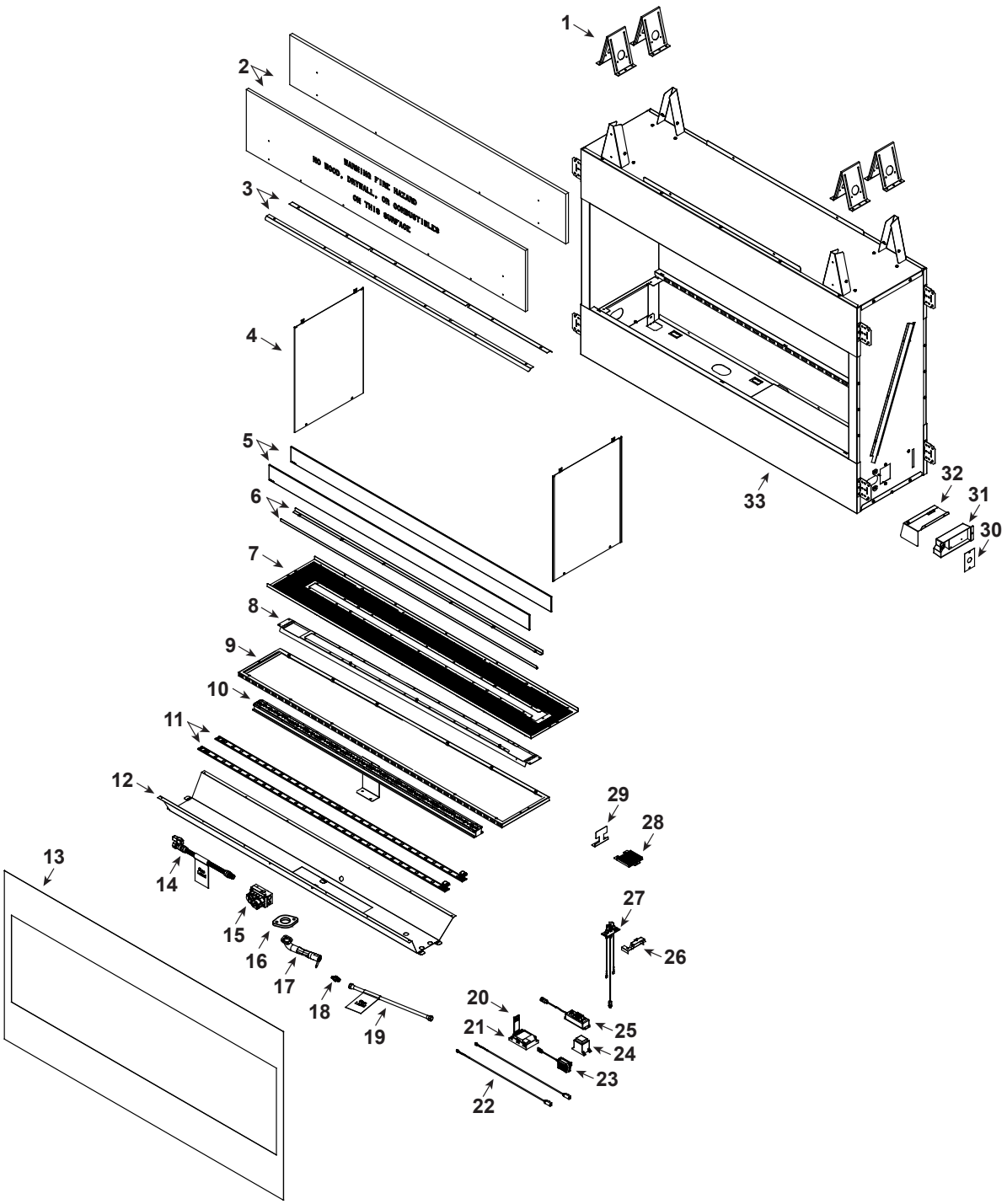

Part number list on following page.

Service Parts

ODLANAIGST-60

Beginning Manufacturing Date: April 2026
Ending Manufacturing Date: Active

IMPORTANT: THIS IS DATED INFORMATION. Parts must be ordered from a dealer or distributor. **Hearth and Home Technologies does not sell directly to consumers**. Provide model number and serial number when requesting service parts from your dealer or distributor.

ITEM	DESCRIPTION	COMMENTS	PART NUMBER	Stocked at Depot
1	Top Standoff	Qty 4 req	SRV11864	
2	Non-combustible Board	Qty 2 req	SRV4112-325	
3	Hood	Qty 2 req	SRV4112-135	
4	Overlay Kit		SRV4113-025	
5	Deflection Glass	Qty 2 req	SRV4112-301	
6	Glass Bracket	Qty 2 req	SRV4112-153	
7	Screen Cover		SRV4124-109	
8	Burner Bottom Inner		SRV4112-111	
9	Burner Bottom Outer		SRV4112-110	
10	Burner Assembly		SRV4112-021	**Y**
11	LED Light Strip	Qty 2 req	SRV4101-321	**Y**
12	LED Mount		SRV4112-113	
13	Overlay Complete		SRV4112-173	
14	Flex Line w/Shutoff		SRV302-320	**Y**
15	Valve Assembly, NG		SRV593-500	**Y**
16	Venturi Gasket		SRV4099-191	**Y**
17	Venturi Assembly		SRV4099-036	**Y**
18	Orifice Flare #23 NG		SRV4018-357	**Y**
19	Flex Gas Line 16”		SRV4121-006	**Y**
20	Wire Assembly		SRV593-590	**Y**
21	IPI Control Module		SRV593-592	**Y**
22	Wire LED Adapter	Qty 2 req	SRV4018-114	**Y**
23	3V Transformer		SRV593-593	**Y**
24	LED Power Module		20308559K	**Y**
25	LED Control Module		SRV4121-160	**Y**
26	Pilot Bracket		SRV4111-150	
27	Pilot Assembly, NG		SRV4018-065	**Y**
28	Pilot Shield		SRV4111-151	
29	Jig, Media Placement		SRV4111-152	
30	Cover Plate		SRV4604-103	
31	Junction Box		SRV4021-013	**Y**
32	Junction Box Cover Assembly		SRV4111-032	
33	Lower Face		SRV4112-133	

Additional service part numbers appear on following page.

Service Parts

ODLANAIGST-60

Beginning Manufacturing Date: April 2026
Ending Manufacturing Date: Active

IMPORTANT: THIS IS DATED INFORMATION. Parts must be ordered from a dealer or distributor. **Hearth and Home Technologies does not sell directly to consumers**. Provide model number and serial number when requesting service parts from your dealer or distributor.

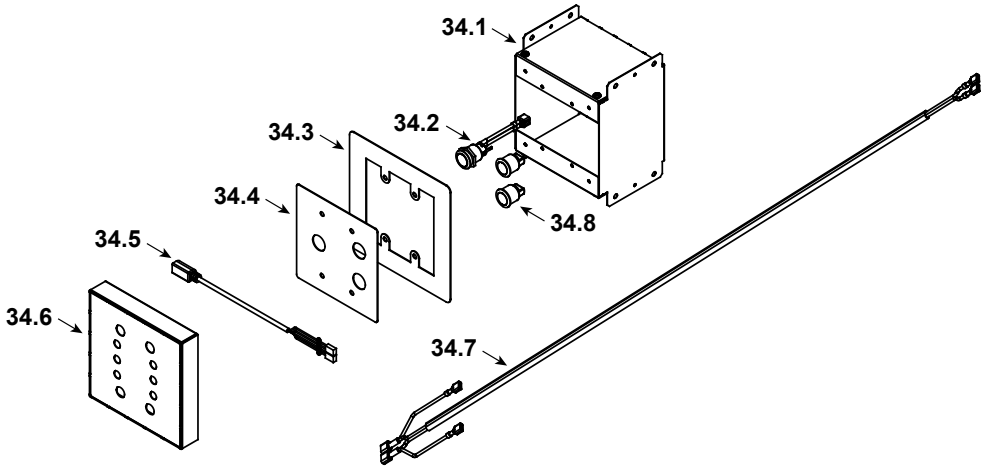

ITEM	DESCRIPTION	COMMENTS	PART NUMBER	Stocked at Depot
34	Remote Accessory Kit		SRV4111-033	
34.1	Switch Box Assembly		SRV4082-376	
34.2	Power Switch		SRV4121-136	**Y**
34.3	Trim Ring		SRV4018-336	
34.4	Switch Cover Plate		SRV4090-292	
34.5	Input Cable		20308587K	**Y**
34.6	Rock Template		SRV4608-250	
34.7	Wire Wall Switch Assembly		SRV4121-137	**Y**
34.8	LED Panel Switch	Qty 2 req	20308586K	**Y**
Conversion Kits				
	Conversion Kit Propane		LPK-ODLANAIG60	
	Orifice Flare		SRV4018-358	
	Pilot Orifice, Propane		SRV593-527	
	Regulator, Propane		SRVLPK-DXF	

D. Contact Information

Outdoor Lifestyles, a brand of Hearth & Home Technologies
7571 215th Street West, Lakeville, MN 50044
www.hearthnhome.com

Please contact your Outdoor Lifestyles dealer with any questions or concerns.
For the location of your nearest Outdoor Lifestyles dealer,
please visit www.hearthnhome.com.

– NOTES –

NOTICE		
Important operating and maintenance instructions included.	Read, understand and follow these instructions for safe installation and operation.	Leave this manual with party responsible for use and operation.

This product may be covered by one or more of the following patents: (United States) 5601073, 5613487, 5647340, 5890485, 5941237, 6006743, 6019099, 6053165, 6145502, 6374822, 6484712, 6601579, 6769426, 6863064, 7077122, 7098269, 7258116, 7470729, 8147240 or other U.S. and foreign patents pending.

Printed in U.S.A. - Copyright 2014