Built-in Heritage Fireplaces

ecosmart+™ Fire

Heritage 26SS

ecosmartfire.com

ecosmart+ Fire

Heritage Series Design features

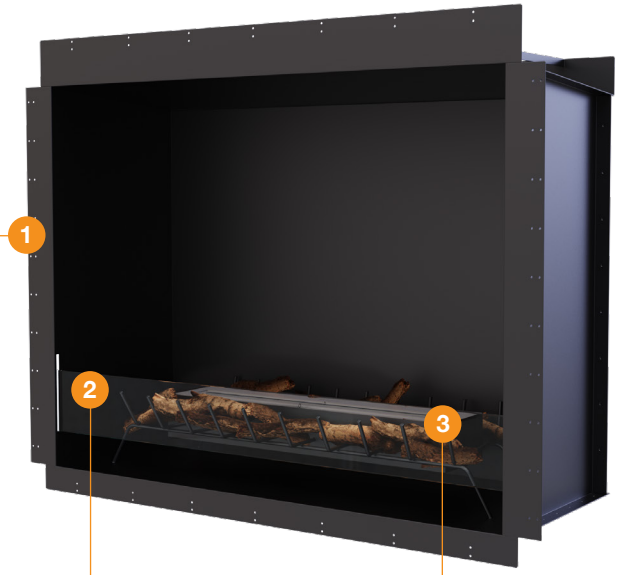

1. Zero Clearance
Self-contained, zero clearance construction allows your Heritage fireplace to be framed into wood or metal studs, providing installation freedom and flexibility for builders, architects, interior designers, landscapers and homeowners.

Built to Last a Lifetime
Zinc sealed steel construction powder coated with super hi-temp black paint prevents rusting so all fireplaces can be used both indoors or outdoors.

Quick and Easy Installation
Requiring virtually no assembly, Heritage Fireplaces are designed to be placed into the desired location, safely secured into position, and operated immediately.

2. Glass Fire Screen
The toughened glass fire screen stabilises the flame in windy conditions. The Integrated windscreen sits flush behind the frame.

No Connections
Light up outdoor and indoor spaces with a soft, alluring glow - easily and efficiently, without cumbersome connections.

Colours
Available in a timeless black finish, Heritage Fireplaces feature a stainless steel burner and offer the option of black for the Heritage 56SS model.

3. Traditional Aesthetic
Ceramic fire-rated wood logs and the iron grate design create a classic fireplace look.

Single Room Application
Single Sided fireplaces feature one open side - view the flame from the front.

No Flue, No Chimney, No Vent
Fuelled by clean-burning e-NRG bioethanol, our burners produce a beautiful orange flame without any smoke, soot or ash.

Forefront of fireplace technology
Backed by 20+ years of research and development, and third-party certification, each model in the Heritage series features world-class safety and fuel ignition technologies.

Global Compliance
These models comply with existing standards in the USA, Europe, UK and Australia. O-TL listed to UL1370, EN 16647 BSI Certified and ACCC Safety Mandate compliant.

Disclaimer. All product specifications and data are subject to change without notice and believed to be correct at the time of publication. MAD Design Group (MDG), its affiliates, agents, and employees, and all persons acting on its or their behalf (collectively, "MAD Design Group"), disclaim any and all liability for any errors, inaccuracies or incompleteness contained herein or in any other disclosure relating to any product. MDG disclaims any and all liability arising out of the use or application of any product described herein or of any information provided herein to the maximum extent permitted by law. The product specifications do not expand or otherwise modify MDG's terms and conditions of purchase, including but not limited to the warranty expressed therein, which apply to these products. No license, express or implied, by estoppel or otherwise, to any intellectual property rights is granted by this document or by any conduct of MDG. Customers using or selling MDG products not expressly indicated for use in such applications do so entirely at their own risk and agree to fully indemnify MDG for any damages arising or resulting from such use or sale. Please contact authorised personnel from MDG to obtain written terms and conditions regarding products designed for such applications. Images are indicative only.

© Copyright 2004 - 2025 MAD Design Group. All rights reserved. V2502

ecosmart+ Fire

Heritage Series Accessories

Included accessories

Jerry Can with Safety Spout and e-NRG bottle adaptor

Jerry Can allows safe storing/ decanting of e-NRG ethanol. e-NRG adaptor connects the Safety Spout to an e-NRG bottle.

e-NRG not available in all countries.

Lighting Rod & Lighter

The Lighting Rod is designed to safely adjust the slider position on the burner. It is also used for the ignition procedure.

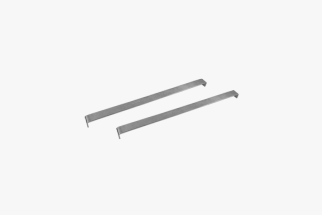

XL Baffles

Placed over the internal burner vents, they serve to increase the efficiency of the burner as well as further stabilise the flame.

(Heritage 56SS only)

Grate Insert

Crafted from 1.2mm SECC steel with hi-temp powder coating, our fireplace grates offer enduring strength and style.

Decorative Ceramic Logs

Engineered to mimic natural wood, our ceramic logs provide an authentic visual experience without ash, debris or residue.

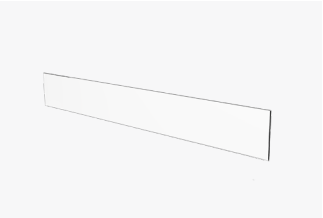

Glass Fire Screen

Paired with a glass fire screen, to stabilises the flame in windy conditions.

Disclaimer. All product specifications and data are subject to change without notice and believed to be correct at the time of publication. MAD Design Group (MDG), its affiliates, agents, and employees, and all persons acting on its or their behalf (collectively, "MAD Design Group"), disclaim any and all liability for any errors, inaccuracies or incompleteness contained herein or in any other disclosure relating to any product. MDG disclaims any and all liability arising out of the use or application of any product described herein or of any information provided herein to the maximum extent permitted by law. The product specifications do not expand or otherwise modify MDG's terms and conditions of purchase, including but not limited to the warranty expressed therein, which apply to these products. No license, express or implied, by estoppel or otherwise, to any intellectual property rights is granted by this document or by any conduct of MDG. Customers using or selling MDG products not expressly indicated for use in such applications do so entirely at their own risk and agree to fully indemnify MDG for any damages arising or resulting from such use or sale. Please contact authorised personnel from MDG to obtain written terms and conditions regarding products designed for such applications. Images are indicative only.

© Copyright 2004 - 2025 MAD Design Group. All rights reserved. V2502

Built-in Heritage Fireplaces

Heritage 26SS Specifications

The Heritage Fireplace Series was born from a desire to combine the warmth and charm of a traditional fireplace with the demands of modern living.

Burner Ventilation and Efficiency*

Compatible Burner	Fuel Capacity	Heats on Average (Indoors)	Thermal Output Net (MAX per burner)	Approx. Burn Time	Minimum Room Size
BK5 (Ethanol)	5 L [1.3 Gals]	Over 35 m^2 [376.7 ft^2]	14 MJ/h 13,000 BTU/h - 3.5 kW	7 - 11 hours	70 m^3 [2,472 ft^3]

Application	Indoor & Outdoor
Surround Color	Black ESF.HB.26SS
Burner Color	Stainless Steel
Materials	Mild Steel (Zinc Sealed) Hi-temp Powder-coat Surround, Toughened Glass, Grade 304 Stainless Steel Burner
Approx. Weight	45 kg [99.0 lb]
Fuel Type	e-NRG Bioethanol / **e-NRG.com**

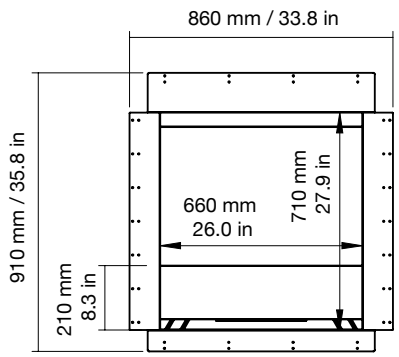

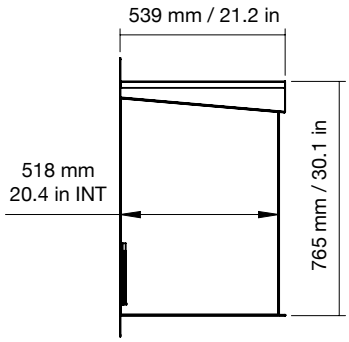

*These values are indicative only and may vary depending on the model purchased, installation, and the seasonal resource used to manufacture e-NRG.

Physical model dimensions should be verified against cut out dimensions BEFORE installation begins to confirm tolerances align.

These models comply with existing standards in the USA, Europe, UK and Australia. O-TL listed to UL1370, EN 16647 BSI Certified and ACCC Safety Mandate compliant.

FOR MORE INFORMATION PLEASE REFERENCE THE CLEARANCE & INSTALLATION MANUAL

Disclaimer. All product specifications and data are subject to change without notice and believed to be correct at the time of publication. MAD Design Group (MDG), its affiliates, agents, and employees, and all persons acting on its or their behalf (collectively, "MAD Design Group"), disclaim any and all liability for any errors, inaccuracies or incompleteness contained herein or in any other disclosure relating to any product. MDG disclaims any and all liability arising out of the use or application of any product described herein or of any information provided herein to the maximum extent permitted by law. The product specifications do not expand or otherwise modify MDG's terms and conditions of purchase, including but not limited to the warranty expressed therein, which apply to these products. No license, express or implied, by estoppel or otherwise, to any intellectual property rights is granted by this document or by any conduct of MDG. Customers using or selling MDG products not expressly indicated for use in such applications do so entirely at their own risk and agree to fully indemnify MDG for any damages arising or resulting from such use or sale. Please contact authorised personnel from MDG to obtain written terms and conditions regarding products designed for such applications. Images are indicative only.

© Copyright 2004 - 2025 MAD Design Group. All rights reserved. V2502