Service Parts

RUBY30IN, RUBY30IL

Ruby 30” Gas Insert - DV

Beginning Manufacturing Date: March 2019
Ending Manufacturing Date: Active

Log Set Assembly

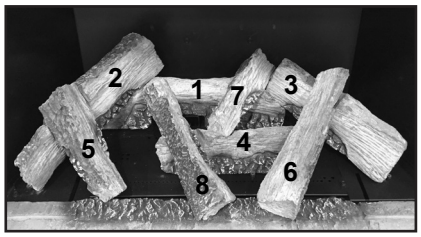

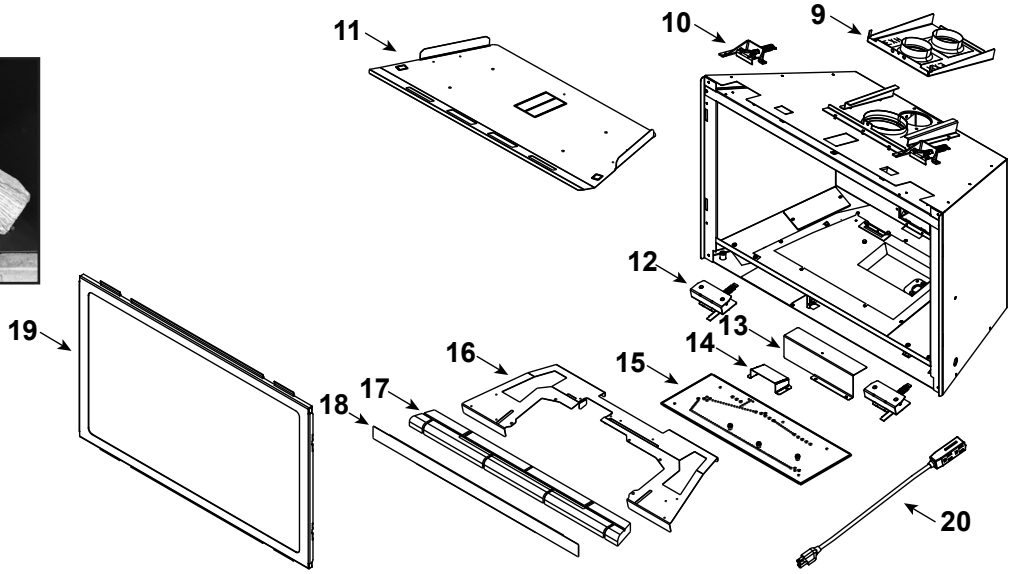

IMPORTANT: THIS IS DATED INFORMATION. Parts must be ordered from a dealer or distributor. **Hearth and Home Technologies does not sell directly to consumers**. Provide model number and serial number when requesting service parts from your dealer or distributor.

ITEM	DESCRIPTION	COMMENTS	PART NUMBER	Stocked at Depot
	Log Assembly (Hearth Refractory not Included)		LOGS-2542	Y
1	Log 1		SRV2542-711	
2	Log 2		SRV2544-715	
3	Log 3		SRV2542-712	
4	Log 4		SRV2542-715	
5	Log 5		SRV2542-717	
6	Log 6		SRV2542-714	
7	Log 7		SRV2542-717	
8	Log 8		SRV2542-718	
9	Slide Plate Assembly		2532-014	
	Tool, Slide Plate (Multi-purpose)		2532-140	
	Gasket		2532-113	
10	Glass Clip Assembly, Top	Qty 2 req	2155-046	
11	Baffle, Firebox		2532-138	
12	Glass Clip Assembly, Bottom	Qty 2 req	2532-009	
13	Air Scoop		2532-135	
14	Pilot Shield		2532-153	
15	Burner Assembly		2542-007	Y
16	Base Pan		2542-130	
17	Hearth Refractory (Not for use with BRICKMI30TB/BRICKMI30CR)		SRV2542-704	
18	Seal, Glass Frame		2532-122	
19	Glass Door Assembly		GLA-2532	Y
20	Power Cord		SRV2532-320M	Y
	Fan		GFK-160A	Y

Additional service part numbers appear on following page.

Service Parts

RUBY30IN, RUBY30IL

Beginning Manufacturing Date: March 2019
Ending Manufacturing Date: Active

#21 Valve Assembly

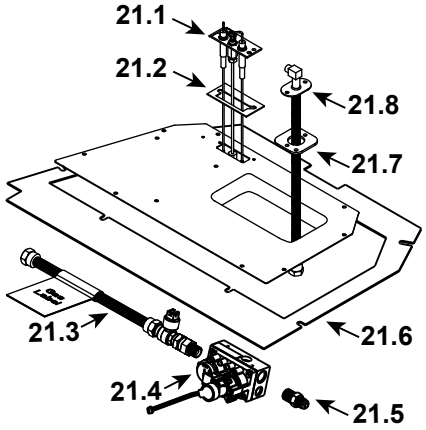

#22 Component Tray

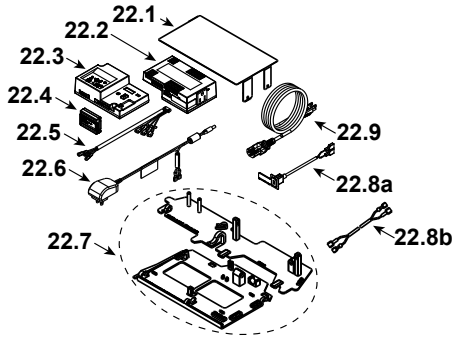

IMPORTANT: THIS IS DATED INFORMATION. Parts must be ordered from a dealer or distributor. **Hearth and Home Technologies does not sell directly to consumers**. Provide model number and serial number when requesting service parts from your dealer or distributor.

ITEM	DESCRIPTION	COMMENTS	PART NUMBER	Stocked at Depot
21.1	Pilot Assembly NG		2550-013	Y
	Pilot Assembly Propane		2550-014	Y
21.2	Pilot Gasket		2532-134	
21.3	Flex Ball Valve Assembly		2532-081	Y
21.4	Valve NG		SRV2166-302	Y
	Valve Propane		2166-303	Y
21.5	Male Connector	Pkg of 5	303-315/5	Y
21.6	Gasket, Valve Plate		2532-131	
21.7	Gasket, Bulkhead		438-407	
21.8	Bulkhead w/Flex Tube		SRV7000-156	Y
	Orifice NG (#35C)		SRV582-835	Y
	Orifice Propane (#51C)		SRV582-851	Y
22.1	Component Heat Shield		2532-144	Y
22.2	Module, B Type AC		SRV2326-150	Y
22.3	Module, IFT Control		SRV2326-130	Y
22.4	Module, RF FCC		SRV2326-120	Y
22.5	Harness, IFT 6 Pin Wiring		SRV2326-132	Y
22.6	6 Volt DC Power Adapter	**Post LC5818239**	2326-191	Y
	Transformer, 6 Volt Wall	**Pre LC5818239**	SRV2326-131	Y
	Jumper Wire, 36” Male/Female	**Pre LC5818239**	2159-310	Y
	Wall Switch Jumper Wire	**Pre LC5818239**	SRV2179-300	Y
22.7	Tray, Component & Wire		2532-172	Y
22.8a	Assembly, USB-C Bracket	**SN Range LC5673022 - LC6494692**	2532-301	Y
22.8b	40” Wire Harness	**Post LC6494692**	SRV2531-140	Y
22.9	Cable, B Type AC Module		SRV2326-152	Y

Additional service part numbers appear on following page.

Service Parts

RUBY30IN, RUBY30IL

Beginning Manufacturing Date: March 2019
Ending Manufacturing Date: Active

IMPORTANT: THIS IS DATED INFORMATION. Parts must be ordered from a dealer or distributor. **Hearth and Home Technologies does not sell directly to consumers**. Provide model number and serial number when requesting service parts from your dealer or distributor.

ITEM	DESCRIPTION	COMMENTS	PART NUMBER	Stocked at Depot
	Battery Pack**	**Pre LC5673022**	SRV2326-134	**Y**
		Post LC5673022	SRV2326-142	
	Bolt, Level Leg	Qty 4 req	2073-162/24	**Y**
	Back Cover Plate (Fan Access)		SRV2532-166	
	Jumper Wires		SRV2187-198	**Y**
	Mineral Wool		050-721	
	RC400 Remote		SRV2326-110	**Y**
	Screw, Bottom Glass Clip	Qty 4 req	419-802/24	**Y**
	Touch up Paint		TUP-GBK-12	**Y**
	Vermiculite Embers		MYSTIC-EMBERS	
Conversion Kits				
	Conversion Kit NG		NGK-MI-IFT	**Y**
	Conversion Kit Propane		LPK-MI-IFT	**Y**
	Pilot Orifice NG		SRV593-528	**Y**
	Pilot Orifice Propane		593-526	**Y**
	Regulator NG		NGK-DXV-50	**Y**
	Regulator Propane		SRVLPK-DXV-50	**Y**

**Fuse for battery pack can be sourced locally, not a warranty item. Specs are 250v, 3A fuse, 3/4” long