BROILMASTER®

PREMIUM GRILLS

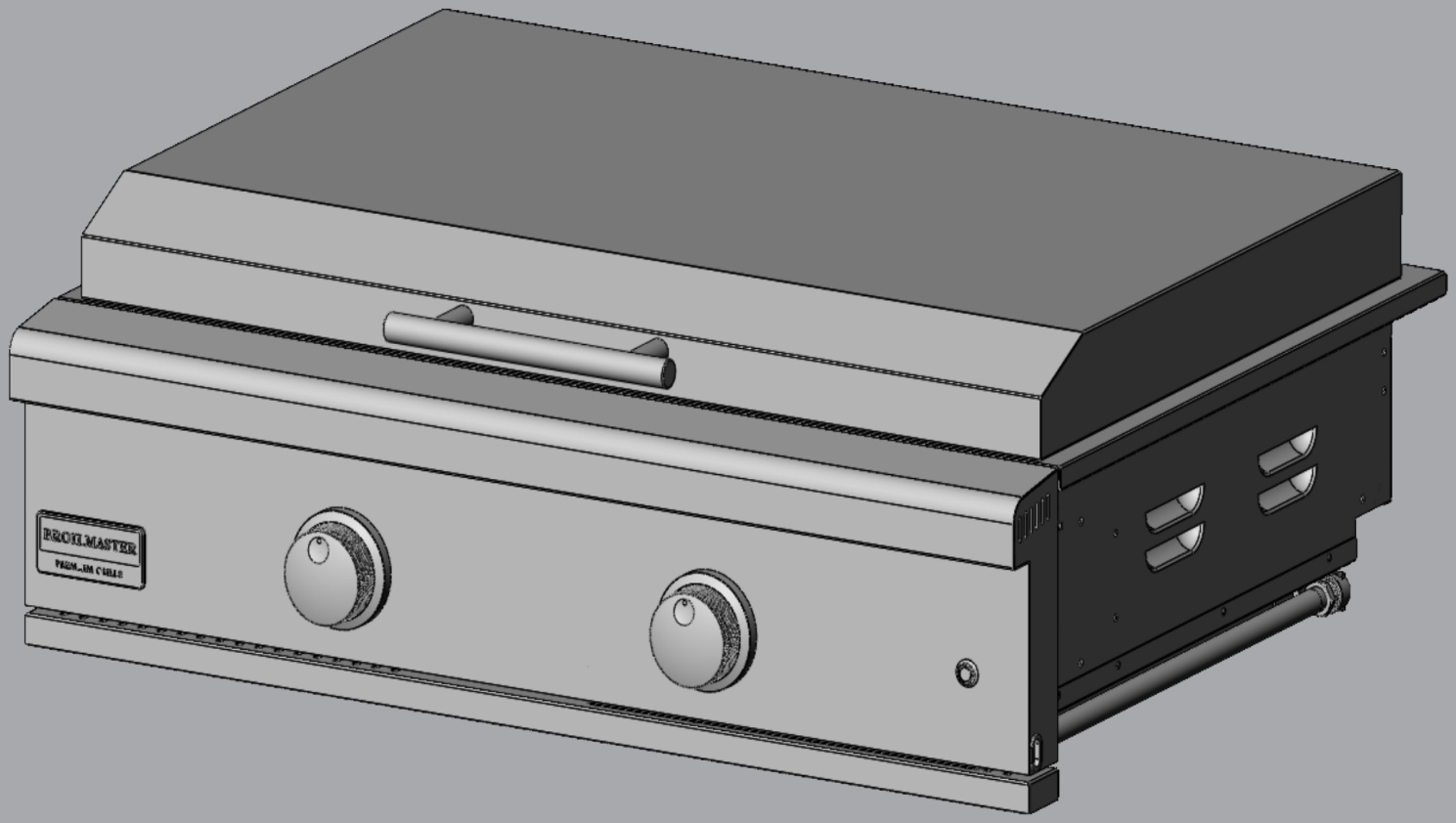

GAS GRIDDLE
CARE & USE / INSTALLATION

Installation, Care And Use Of Your BROILMASTER Professional Cooking Product

THIS MANUAL MUST REMAIN WITH THE PRODUCT OWNER FOR FUTURE REFERENCE.

This Manual Covers The Following BROILMASTER Products

GRIDDLE MODELS: • BSB322G(N,P)-1

GAS-FIRED C UL US LISTED

⚠ WARNING

Do not store or use gasoline or other flammable liquids or vapours in the vicinity of this or any other appliance. An propane cylinder not connected for use shall not be stored in the vicinity of this or any other appliance.

⚠ DANGER

If you smell gas:

1. **Shut off gas to the appliance.**
2. **Extinguish any open flame.**
3. **Open lid.**
4. **If odor continues, keep away from the appliance and immediately call your gas supplier or your fire department.**

FOR OUT DOOR USE ONLY

IMPROPER INSTALLATION, ADJUSTMENT, ALTERATION, SERVICE OR MAINTENANCE CAN CAUSE PROPERTY DAMAGE, INJURY OR DEATH. READ THIS MANUAL THOROUGHLY BEFORE INSTALLATION, USE OR SERVICING OF THIS EQUIPMENT.

NOTE TO INSTALLER

This manual must remain with griddle. Check your local building codes for proper method of installation. In the absence of local codes, this unit should be installed in accordance with National Fuel Gas Code No. ANSI Z21.58D-2002 USA or CAN/CGA-B149.1/.2 Natural Gas/ Propane Code. (Canada) latest edition or the National Electrical Code ANSI/NFPA No. 70 or the Canadian Electrical Code CGA 1.6b2005 or latest edition.

BROILMASTER® PREMIUM GRILLS

TABLE OF CONTENTS

BROILMASTER BBQ Models 2
Product Specifications 4
Overall Griddle Dimensions 5
Control Identification 5
Warning Instructions 6
NOTICE: Commonwealth Of Massachusetts 7
Griddle Location 8
Location Of Your Griddle (*Using Your Griddle During / In Windy Conditions*) 9/10
Built-In Griddle Dimensions 11
Vent Registers / LP Gas 12
Built-In Sleeve Dimensions 13
Electrical Requirements & Hook-up 14
Wiring Schematics 15
Propane Gas Cylinder Safety 16
Gas Requirements And Hook-up 17/18/19/20
Important Safety Griddle Information 21
Converting Your Gas Griddle 22/23
Converting Your Gas Griddle Type 24
Lighting The Burners 25
Seasoning The Griddle (*Optional*) 26
Lighting The Griddle 27
Burner Type Identification 28
Using The BROILMASTER Griddle 28
Direct Cooking Method 29
Indirect Cooking Method 29
Cooking Tips 30
Burner Cleaning And Adjustment 31
Warnings 32
Cleaning The Griddle 33/34
Warranty 35
Master Parts Distributor List 36
How To Order Repair Parts 36
Contacting Your BROILMASTER Dealer 37
BROILMASTER Parts List 38
Parts Diagram 39
Sleeves, Side Burners, And Island Accessories 40/41
Appliance Service History 42/44

BROILMASTER®
PREMIUM GRILLS

Product Specifications

Description	32" BSB322G(N,P)
Cooking Area, Sq. In.	462
Gas Type	NAT (N) / LP (P)
Conversion Kit, NAT to LP	BR0375 (N only)
Conversion Kit, LP to NAT	BR0374 (P only)
Main Burner Orifices, NAT	2 - #50 2.08 mm
Main Burner Orifices, LP	2 - 1.30 mm
Burner Type	2 - Stainless Tube U-Shape w/Venturi
Burner BTU's NAT (Each/Total)	18,000 / 36,000 (N Only)
Burner BTU's LP (Each/Total)	19,000 / 36,000 (P Only)
Cooking Surface	Fully Welded Flat Plate w/Backsplash And Drip Trough
Lid Assembly	Fully Welded w/Polished Edges
Control Panel	Fully Welded
Drip Tray	Fully Welded
Ignition Type (No Battery)	Push & Turn Flame Thrower
Control Panel Lights	LED Blue 12V
Cutout Dimensions For Griddle	$8^1/_2$H x $20^1/_2$D x 31W
Lighting Rod (Removable)	Attached To Control Panel

Overall Griddle Dimensions

BSB322G

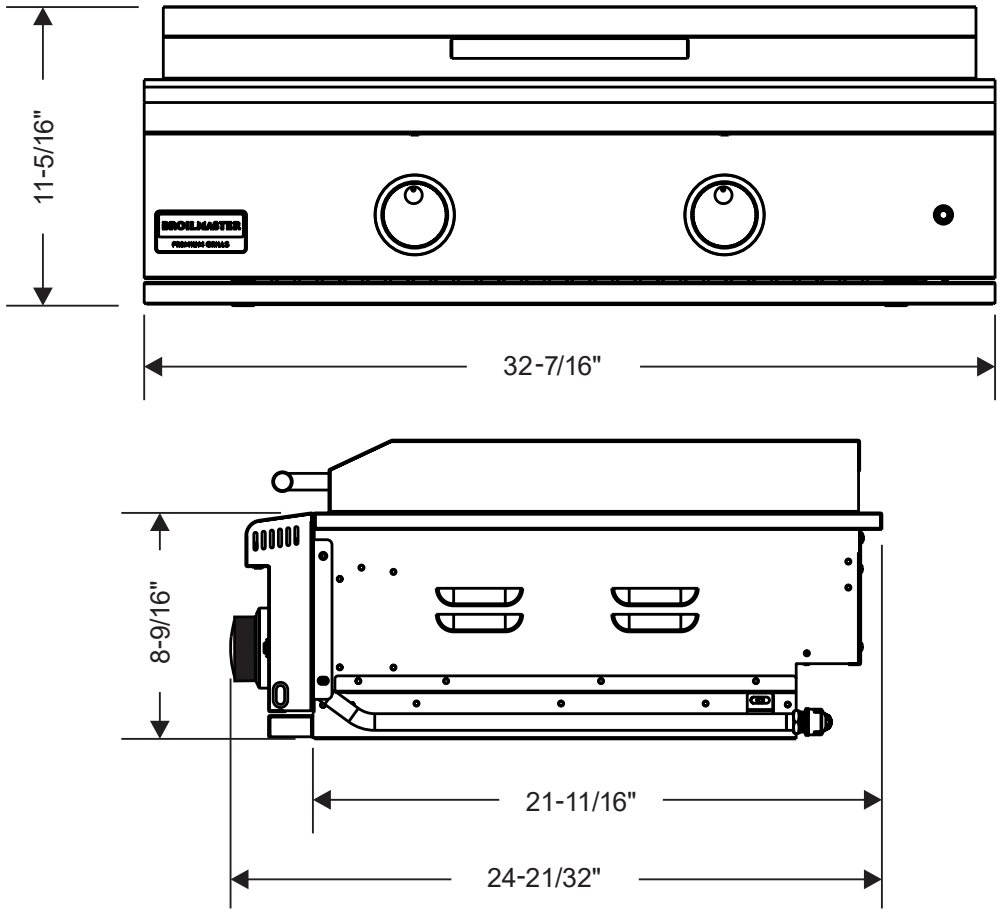

Control Identification

BSB322G

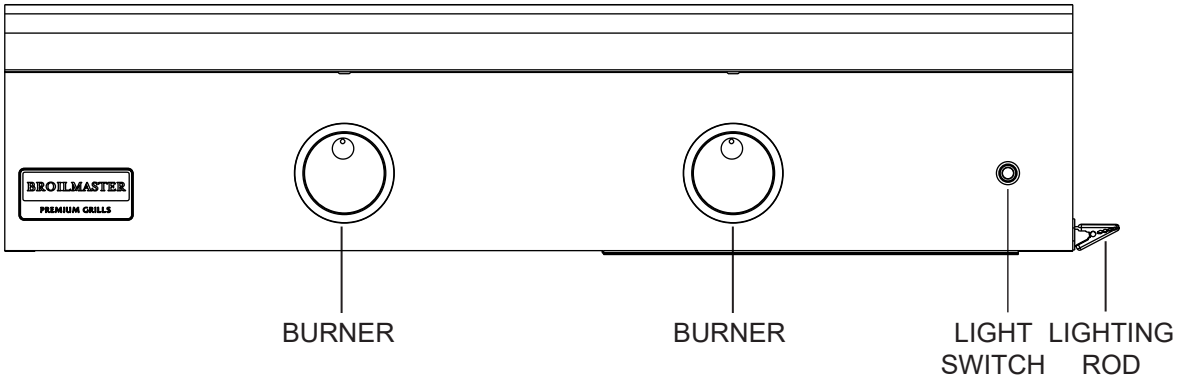

WARNING

- Read this manual carefully and completely before using your griddle, to reduce the risk of fire, burn hazard or other injury, and to ensure proper installation and servicing.
- Never use rusted, dented or damaged propane cylinders. Never store additional or empty propane cylinders in the griddle cabinet or in the vicinity of this or any other gas or electrical appliance. Do not store propane cylinders indoors or on their sides for gas may escape. Gas cylinders are highly flammable.
- Any Children should never be left alone or unattended in an area where a griddle is located. Place your griddle well away from areas where children play. Do not store items that may interest children in or around the griddle, in the cart, or in the enclosure or Island.
- Never move the griddle when hot. When in use, portions of the griddle are hot enough to cause severe burns.
- Always maintain the required clearances from combustibles as detailed. The griddle is designed for outdoor use only. Never use in a garage, building, shed, breezeway, or other enclosed area. Do not use this griddle under any unprotected overhead combustible construction. Combustible material exposed to heat will catch on fire.
- Gas griddles are not designed or certified for and are not to be installed in or on recreational vehicles, portable trailers, boats or any other moving installation including commercial use.
- Always have a Fire Extinguisher accessible — never attempt to extinguish a grease fire with water or other liquids.
- Store your griddle in a well-ventilated area. If stored indoors, detach and leave L.P. cylinder outdoors in a well-ventilated area away from heat and away from where children may tamper with it. Always leave tank outdoors.
- Keep any electrical supply cord and the fuel supply hose away from any heated surfaces. Electrical cords should be placed away from walkways to avoid tripping hazard.
- Do not repair or replace any part of the griddle unless specifically recommended in this manual. Other service should be performed by a certified and qualified Gas and BBQ technician.
- If the griddle is installed by a professional installer or technician, be sure that he/she shows you where your gas supply shut-off is located. All gas lines must have a shut-off that is readily and easily accessible. If you smell gas, check for gas leaks immediately. Check only with a soap and water solution. Never check for gas leaks with an open flame.
- Inspect the L.P. gas supply hose prior to each use of the griddle. If there is evidence of excessive abrasion or wear, or the hose is cut, it must be replaced before using the griddle.
- The outdoor cooking gas appliance and its individual shut-off valve must be disconnected from the gas supply piping system during any pressure testing of that system at test pressures in excess of 0.5 psi (3.5 kPa).
- The outdoor cooking gas appliance must be isolated from the gas supply piping system by closing its individual manual shut-off valve during any pressure testing of the gas supply piping system at test pressures equal to or less than 1/2 psi (3.5 kPa).

NOTICE: Commonwealth Of Massachusetts

1. Massachusetts requires all gas be installed using a plumber or gas fitter carrying the appropriate Massachusetts license.
2. All permanently-installed natural gas or propane installations require a “T” handle type manual gas valve be installed in the gas supply line to this appliance.
3. This does not apply to portable propane installations using a 20 pound cylinder.

WARNING! CALIFORNIA PROPOSITION 65

1. The burning of gas cooking fuel generates some by-products which are on the list of substances which are known by the State of California to cause cancer or reproductive harm.
2. California law requires businesses to warn customers of potential exposure to such substances. To minimize exposure to the substances, always operate this unit according to the use and care instructions found in this manual. Be certain to provide adequate ventilation when cooking.
3. **WARNING**: Handling the brass material on this product exposes you to lead, a chemical known to the state of California to cause cancer, birth defects or other reproductive harm. (Wash hands after handling this product.)
4. For more information go to this website: **www.p65warning.ca.gov**

Griddle Location

WARNING

- Never install this product into a combustible enclosure. Doing so could result in fire, property damage and personal injury. Combustible material is "anything" that can catch on fire.
- Never locate the griddle under a roof or overhang, in a building, garage, shed or other such enclosed area.
- Installation must conform with local codes or, in the absence of local codes, with either the National Fuel Gas Code, ANSI Z223.1/NFPA 54, Natural Gas and propane Installation Code, CSA B149.1, or Propane Storage and Handling Code, B149.2, in Canada.

WHERE IS THE WIND COMING FROM?

When selecting a suitable location, consider important factors such as exposure to the wind and foot-traffic patterns.

If you have a free standing griddle, position it so the prevailing wind blows into the rear of the griddle (at your front when cooking), supporting the proper rear of BBQ to front of BBQ airflow. Built-in griddles located in areas with prevailing winds should be protected by a wind barrier. Winds hitting the front of the griddle directly may cause problems.

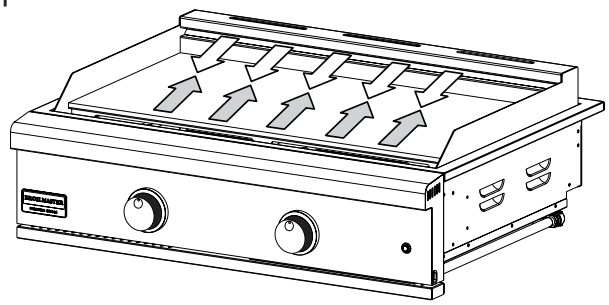

Be sure wind doesn't blow into the front of the griddle gap.

HOW LONG IS YOUR GAS RUN GOING TO BE?

Keep all gas supply lines as short as possible because gas lines lose pressure over distance and with each elbow and tee that is added. This drop in pressure affects griddle performance.

CHECK THE BBQ IS LEVEL?

Proper leveling during installation is critical. A griddle that is out of level will cause erratic burner combustion and inefficient, uneven heating. A carpenter's spirit level should be used to level the griddle both front-to-back and side-to-side.

If the floor is uneven or has a decided slope, re-leveling may be required each time you move a freestanding unit.

Location Of Your Griddle

USING YOUR GRIDDLE IN WINDY CONDITIONS:

- As a high-performance gas appliance, your BROILMASTER griddle requires significant amounts of air to support the burner combustion process. Your griddle has been engineered to take air in through the control panel area, and exhaust the combustion out through the gap between the front and rear hoods
- Using your griddle in windy conditions can disrupt the proper flow of air through your griddle, leading to reduced performance, or in certain severe cases, causing heat buildup in the control panel area. This can lead to problems such as having the control knobs getting hot or melting, or burn hazards when the control panel surfaces become too hot to touch.
- If you have a freestanding griddle, it is best to position the unit so the prevailing wind blows into the rear of the griddle (or at your front), thus supporting the proper airflow. Winds hitting the front of the griddle directly are the most likely to cause problems.
- Please note that damage to your griddle resulting from use in windy conditions, such as melted knobs or igniter wires, or control panel discoloration from heat build-up, are excluded from warranty coverage.
- Outdoor griddle can create more heat than indoor kitchen ranges.

BUT THERE ARE A FEW THINGS YOU CAN DO TO FURTHER PREVENT THE POSSIBILITY OF IMPROPER HEAT BUILDUP:

- If you suspect the griddle is overheating, using an heat resistant mitt, adjust the burner control knob to a lower setting. Do not grab the knobs without testing the temperature of them.
- Install your griddle with a wind break behind it. This is a wall, fence or anything that will disrupt the wind directly hitting the gas griddle.
- Situate the griddle so prevailing winds are not blowing into the front of the griddle.

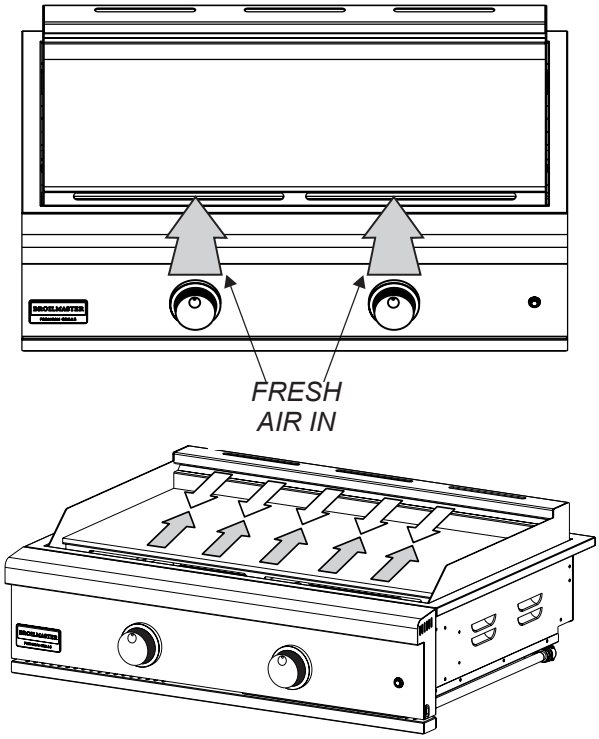

Wind hitting the back of the griddle can disrupt proper exhaust.

Location Of Your Griddle (Cont'd.)

BUILT IN LOCATION:

- The BROILMASTER Built in model is designed for easy installation into a non-combustible masonry enclosure.
- The BBQ must be surrounded by non-combustible material like Brick or Hardibacker and must not be installed in an island made of combustible material.
- There is a required 16" clearance on each side of the Gas Griddle. See below clearance to combustibles.

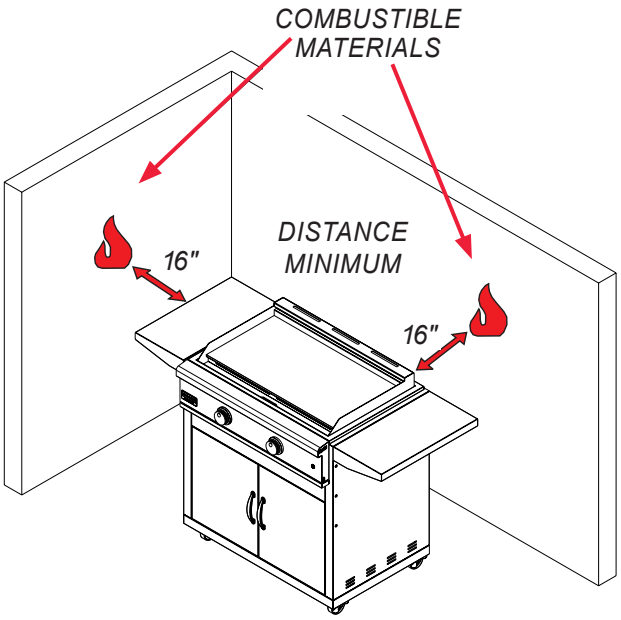

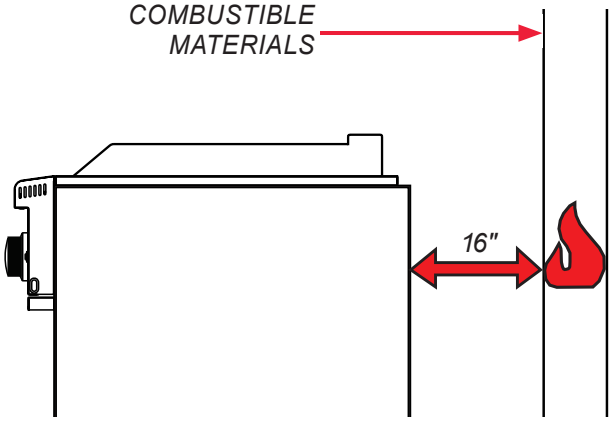

- The griddle drops into the cutout opening and sits on the sides and back of the griddle. There is no need to fasten the griddle to the island. The gas griddle must be able to be removed for general maintenance so do not grout sides or fasten in.

CLEARANCE TO COMBUSTIBLE CONSTRUCTION:

Minimum clearance from sides and back of unit to adjacent combustible construction below top of unit are 16" from sides and 16" from back. Use your griddle at least 16" away from any wall or surface.

Use your griddle 16" or more away from any combustible objects that can melt or catch fire such as vinyl or wood siding, fences, overhangs, or any other sources of ignition; including pilot lights and live electrical appliances.

Do not use your griddle under any overhead combustible construction. Never use your gas griddle in a garage, porch, shed, breezeway, or any other enclosed area. Never use your gas griddle on a balcony, deck, or patio above the ground floor of your home.

Built In Griddle Dimensions

THESE GRILLS ARE FOR INSTALLATION IN ENCLOSURES MADE ONLY OF NON-COMBUSTIBLE MATERIALS.

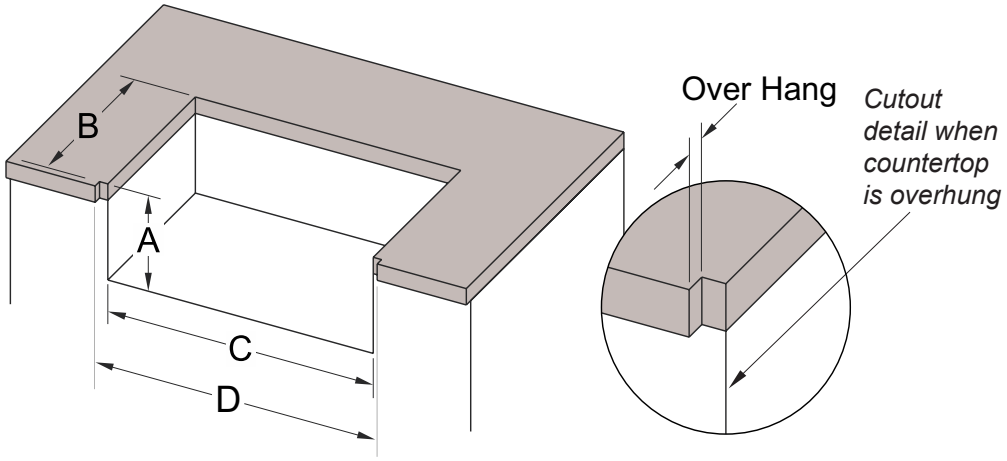

Model #	Cutout A	Cutout B	Cutout C	Cutout D
BSB322G(N,P)	8-1/2"	20-1/2"	31"	33"

BSB322

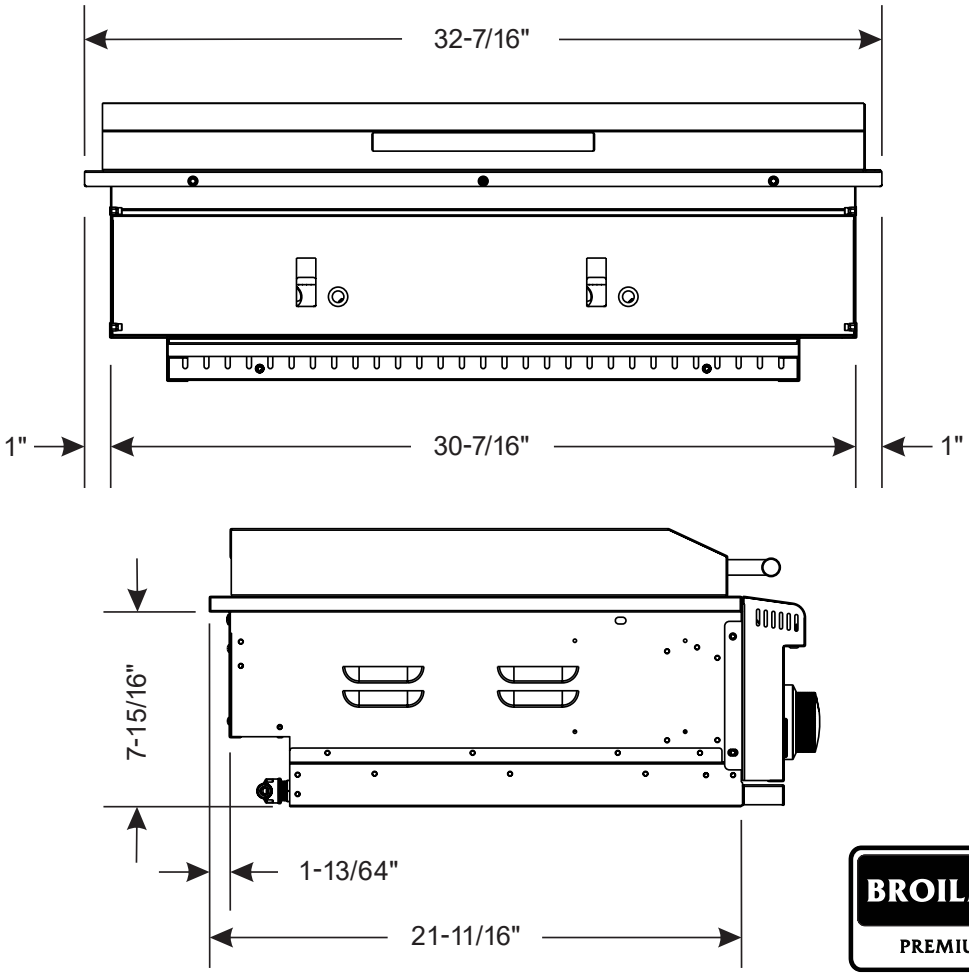

Vent Registers

REQUIRED WHEN AN LP GAS TANK IS USED

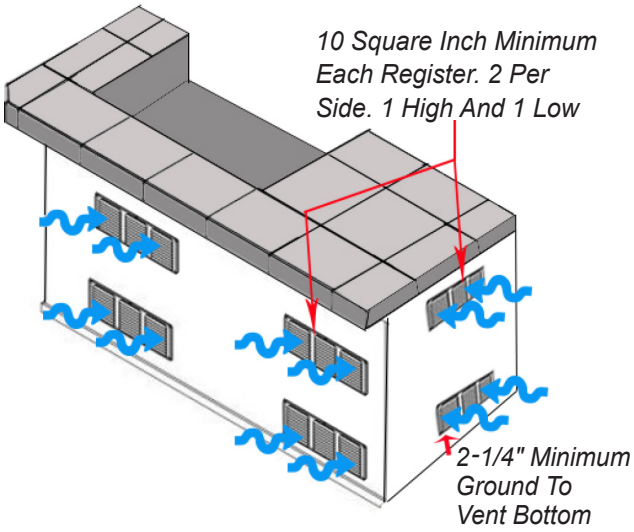

LP Gas

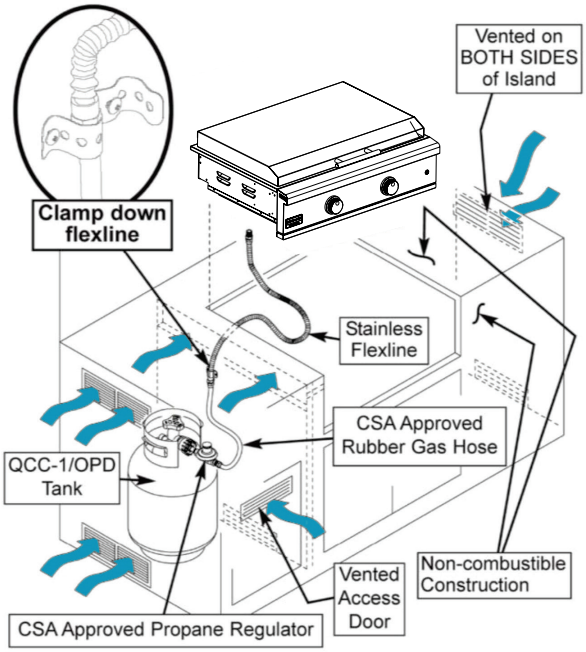

INSULATED SLEEVE INSTALLATION INSTRUCTIONS

IMPORTANT: Before you build the frame, you must take into consideration the total weight of the sleeve, griddle and any finishing materials.

Review the table on the next page for the proper framing dimensions for the insulation sleeve. Determine the entry point for both the gas inlet and electric connections. Make the 4" square holes for gas and electrical connections (rear or bottom access) based on your requirements. Note that the gas and electrical connections are located on the right side.

A “Level” should be used to assure that the framing is level, both front to back and side to side.

NOTE: Never under any circumstance should you install the transformer or run a gas hose in between the griddle and the inside of the insulating sleeve.

SLEEVE INSTALLATION

Position the sleeve into the frame. No part of the enclosure can protrude above the top surface or in front of the face surface of the liner.

GRIDDLE INSTALLATION

Use the proper equipment to support the griddle. Place the griddle into the sleeve and place it over the sleeve lip across the back and sides. The liner is designed to support the griddle without additional fasteners.

FINISHING

If desired any gap remaining between the sleeve and the non-combustible enclosure may be filled with a non-combustible sealant.

Built-In Sleeve Dimensions (Optional Accessory)

THERE GRILLS ARE FOR INSTALLATION IN ENCLOSURES MADE ONLY OF NON-COMBUSTIBLE MATERIALS.

Model #	Cutout A	Cutout B	Cutout C	Cutout D	Cutout E	Cutout F
BSB322G(N,P)	33-3/4"	21-1/4"	8-7/8"	3-1/4"	3-5/8"	35"

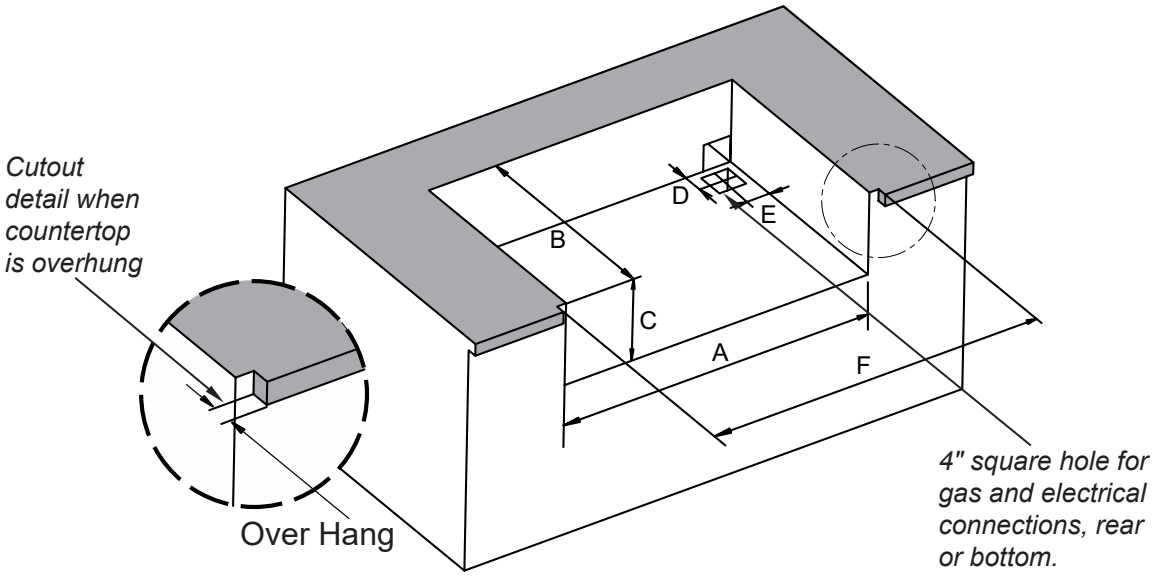

REFER TO INSULATED SLEEVE MANUAL FOR SLEEVE DIMENSIONS.

Electrical Requirements And Hook-up

WARNING! ELECTRICAL GROUNDING

- Product installation must meet local electric codes or, in the absence of local codes, the latest edition of the National Electrical Code ANSI/NFPA No. 70 or the Canadian Electrical Code CGA 1.6b2005.
- Use only a Ground Fault Interrupter (GFI) protected circuit with this outdoor cooking gas appliance.
- This griddle is equipped with a three prong (grounding) electric plug for your protection against shock hazard and must be plugged directly into a properly grounded three prong outlet. Never cut or remove the grounding prong from this plug.
- Use only extension cords with a 3 prong grounding plug, rated for the power of the equipment, and approved for outdoor use with a “W-A” marking.
- To protect against electric shock, do not immerse any part of the power cord, an extension cord or any plugs in water or other liquid.
- Unplug the product from the outlet when not in use and before cleaning. Allow it to cool before putting on or taking off parts.
- Do not let the cord touch hot surfaces.
- Do not use an outdoor cooking gas appliance for purposes other than intended.
- Do not operate any outdoor cooking gas appliance with a damaged cord, plug, or after the appliance malfunctions or has been damaged in any manner. Contact the dealer for repair.

WARNING

CALIFORNIA PROPOSITION 65

The electrical supply cord and plug of the Rotisserie and Transformer contain chemicals, including lead, known to the State of California to cause cancer, and birth defects or other reproductive harm. Wash hands after handling.

CAUTION

To protect against shock hazard risk, connect only to properly Grounded Outlet.

WARNING

This appliance, when installed, must be electrically grounded in accordance with local codes or, in the absence of local codes, with the National Electrical Code, ANSI/NFPA 70, or the Canadian Electrical Code, CSA C22.1. Keep any electrical supply cord and the fuel supply hose away from any heated surface.

Wiring Schematics

NOTE: This griddle uses a transformer to provide power to the LED lights. The transformer should be secured to the island walls or cart back wall. Plug only into a Ground Fault Interrupter (GFI) protected circuit.

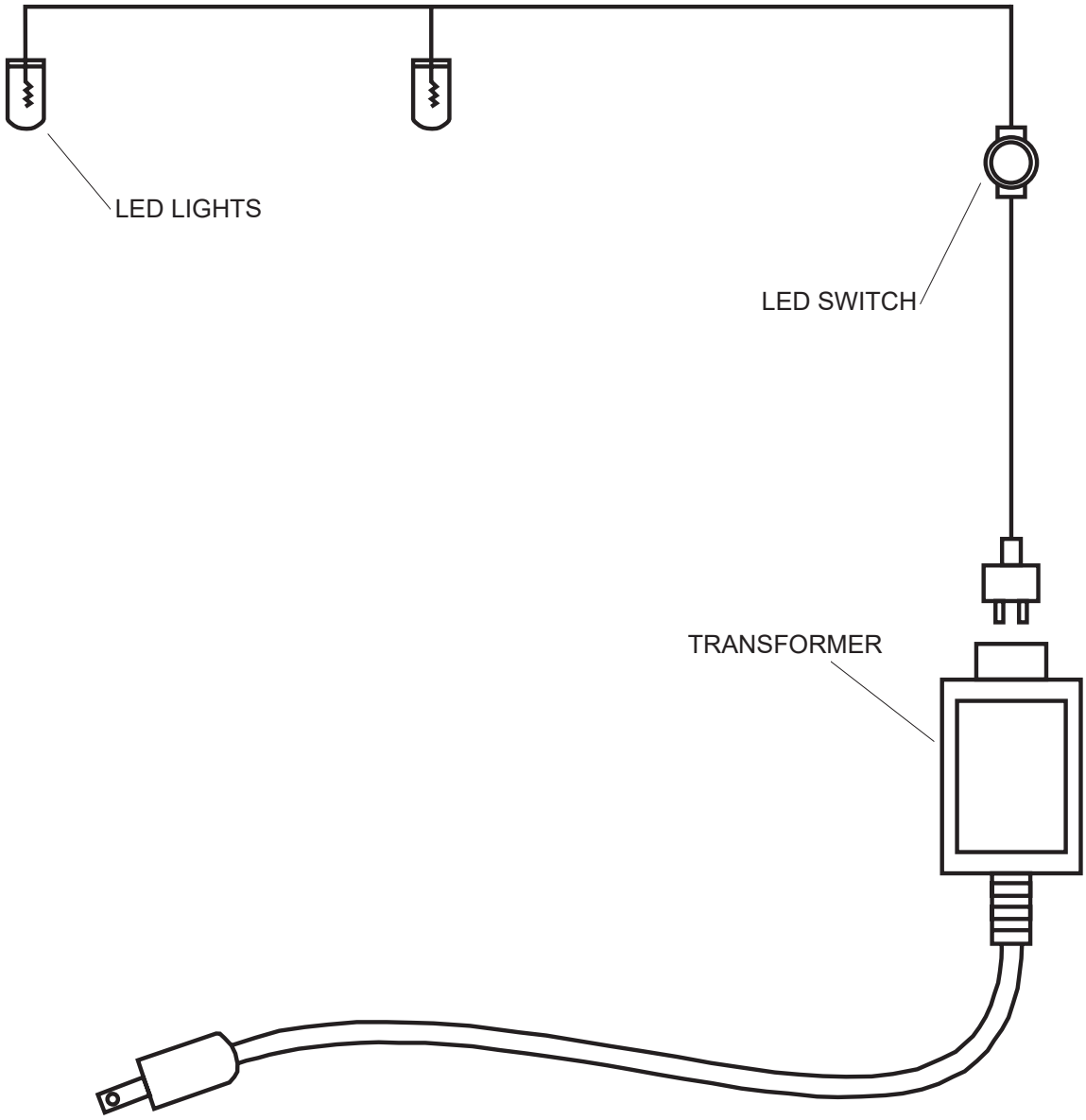

LP Gas Cylinder Safety

LP Gas griddle models are designed for use with a standard 20lb. Liquid Propane Gas (LP Gas) tank (sold separately. Never connect your gas griddle to an LP Gas tank that exceeds this capacity. A tank of approximately 12 inches in diameter by 18-1/2 inches high is the maximum size LP Gas tank to use. You must use an "OPD" gas tank which has a listed Overfill Prevention Device. This safety feature prevents tank from being overfilled which can cause a malfunction of the LP Gas tank.

The LP Gas tank must be constructed and marked in accordance with the Specifications for LP-Gas Cylinders of the U.S. Department of Transportation (D.O.T. or the National Standard of Canada, CAN/CSA-B339, Cylinders, Spheres and Tubes for Transportation of Dangerous Goods, and Commission; as applicable.

The LP Gas tank must have a shut-off valve, terminating in an LP Gas supply tank valve outlet, that is compatible with a Type 1 tank connection device. The LP Gas tank must also have a safety relief device that has a direct connection with the vapor space of the tank. The tank supply system must be arranged for vapor withdrawal.

The LP Gas tank must have a collar to protect the tank valve. Never connect an unregulated LP gas tank to your gas griddle. The gas regulator assembly supplied with your gas griddle is adjusted to have an outlet pressure of 11" water column (W.C.) for connection to an LP gas tank. Only use the regulator and hose assembly supplied with your gas griddle.

Replacement hose and regulator assembly must be identical to those listed in the parts list of this Operator's Manual as specified by EMPIRE COMFORT SYSTEMS.

Have your LP Gas dealer check the release valve after every filling to ensure it remains free of defects. Always keep LP Gas tank in upright position. Do not subject the LP Gas tank to excessive heat.

Never store an LP Gas tank indoors. If you store your gas griddle in the garage always disconnect the LP Gas tank first and store it safely outside.

LP Gas tanks must be stored outdoors in a well-ventilated area and out of the reach of children. Disconnected LP Gas tanks must not be stored in a building, garage or any other enclosed area.

The regulator and hose assembly can be seen by opening the cart or island doors. They must be inspected before each use of the griddle. If the hose is damaged in any way, it must be replaced prior to using the griddle again.

The Gas Griddle is setup to operate with a LP Gas Cylinder equipped with an OPD (Overfilling Prevention Device).

WARNING

Do not store a spare LP-Gas tank under or near this appliance. Never fill the tank beyond 80 percent full; and if the information is not followed exactly, a fire causing death or serious injury may occur.

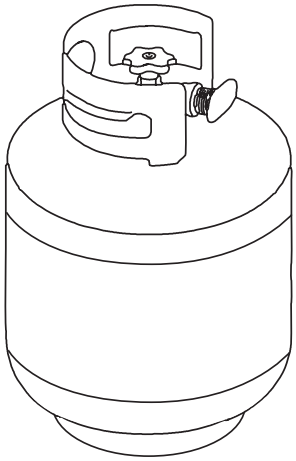

BROILMASTER®
PREMIUM GRILLS

Gas Requirements And Hook-up

LP GAS MODEL ONLY - TYPE 1 CONNECTION WITH REGULATOR AND HOSE TO YOUR LP GAS TANK.

Connect and tighten the swivel nut of the gas hose to the griddle manifold shown below.

Turn all Control Knobs to the OFF position. Inspect the valve connection port and regulator assembly for damage or debris. Remove any debris. Never use damaged equipment.

Connect the regulator assembly to the tank valve and HAND TIGHTEN nut clockwise to a full stop. DO NOT use a wrench to tighten because it could damage the Quick Coupling Nut and result in a gas leak/fire hazard.

Open the tank valve a full turn (counterclockwise) and use a soapy water solution to check all connections for leaks before attempting to light your griddle. See "Check All Connections for LP Gas Leaks." If a leak is found, turn the tank valve off and do not use your griddle until the leak is repaired.

CHECK ALL CONNECTIONS FOR LP GAS LEAKS.

Never test for leaks with an open flame. Prior to first use, at the beginning of each season, or every time your LP Gas tank is changed, you must check for gas leaks.

FOLLOW THESE THREE STEPS:

1. Make a soap solution by mixing one part liquid detergent and one part water.
2. Turn the griddle Control Knobs to the full OFF position, then turn the gas ON at source.
3. Apply the soap solution to all gas connections. If bubbles appear in the soap solution the connections are not properly sealed. Check each fitting and tighten or repair as necessary.

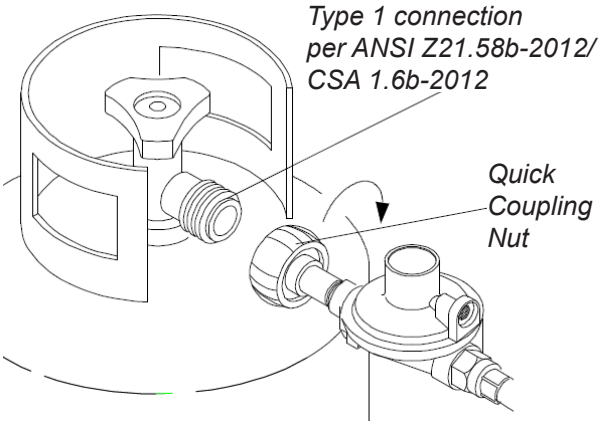

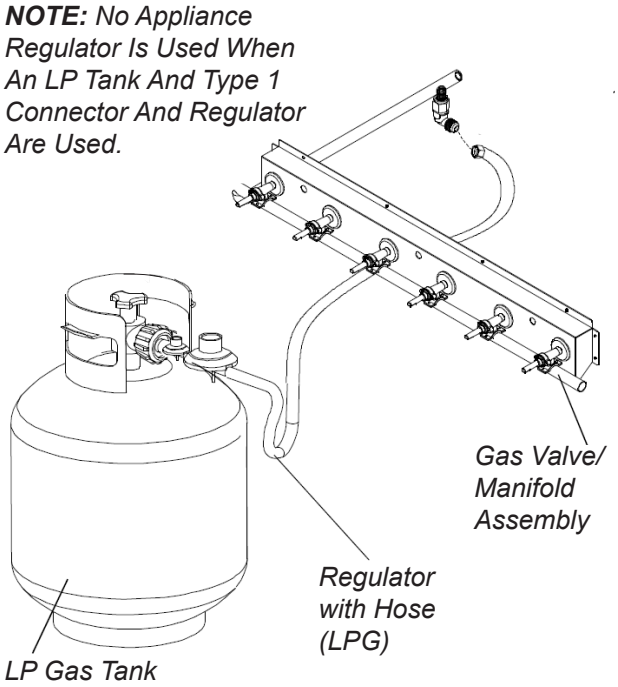

Gas Requirements And Hook-up (Cont'd.)

CAUTION: When the appliance is not in use the gas must be turned off at the tank. Place dust cap on cylinder valve outlet whenever the cylinder is not in use. Only install the type of dust cap on the cylinder valve outlet that is provided with the cylinder valve. Other types of caps or plugs may result in leakage of propane.

WARNING

1. Do not store spare LP cylinder within 10 feet (3m) of this appliance.
2. Do not store or use gasoline or other flammable liquids and vapors within 25 feet (8m) of this appliance.
3. When cooking with oil/grease, do not allow the oil/grease to get hotter 350°F (177°C).
4. Do not leave oil/grease unattended.

WARNING

If you have a gas leak that cannot be repaired, turn off the gas at the source and disconnect the fuel line from your griddle. Call your gas supplier or fire department for repair assistance.

DISCONNECTING A LIQUID PROPANE GAS (LPG) TANK FROM YOUR GRIDDLE

1. Make sure the Burner Valves and LP Gas tank valve are off. (Turn clockwise to close.)
2. Detach the hose and regulator assembly from the LP Gas tank valve by turning the Quick Coupling Nut counterclockwise.
3. Do not use a wrench or any tools when turning the Quick Coupling Nut.

WARNING

Failure to read and follow the Use and Care Instructions could result in a fire or explosion that could cause serious bodily injury, death, or property damage.

Gas Requirements And Hook-up (Cont'd.)

CONNECTING TO A PERMANENTLY PLUMBED GAS LINE

Follow the diagrams below when connecting gas to your griddle from a natural gas line or a permanently plumbed hard piped LP connection.

NOTE: When using a portable cart mounted griddle, the use of a 12ft. Q.C. Hose is recommended from griddle to gas supply.

Whether the griddle is built-in to a permanent structure, the use of a S/S Flex-Line is recommended from griddle to gas supply.

Connect the Swivel nut of the flex-line or 12' Natural Gas Hose to the horizontal fitting of the griddle and connect the other end to the gas supply line from your home. Read and follow the "Gas Safety Instructions" on page 22.

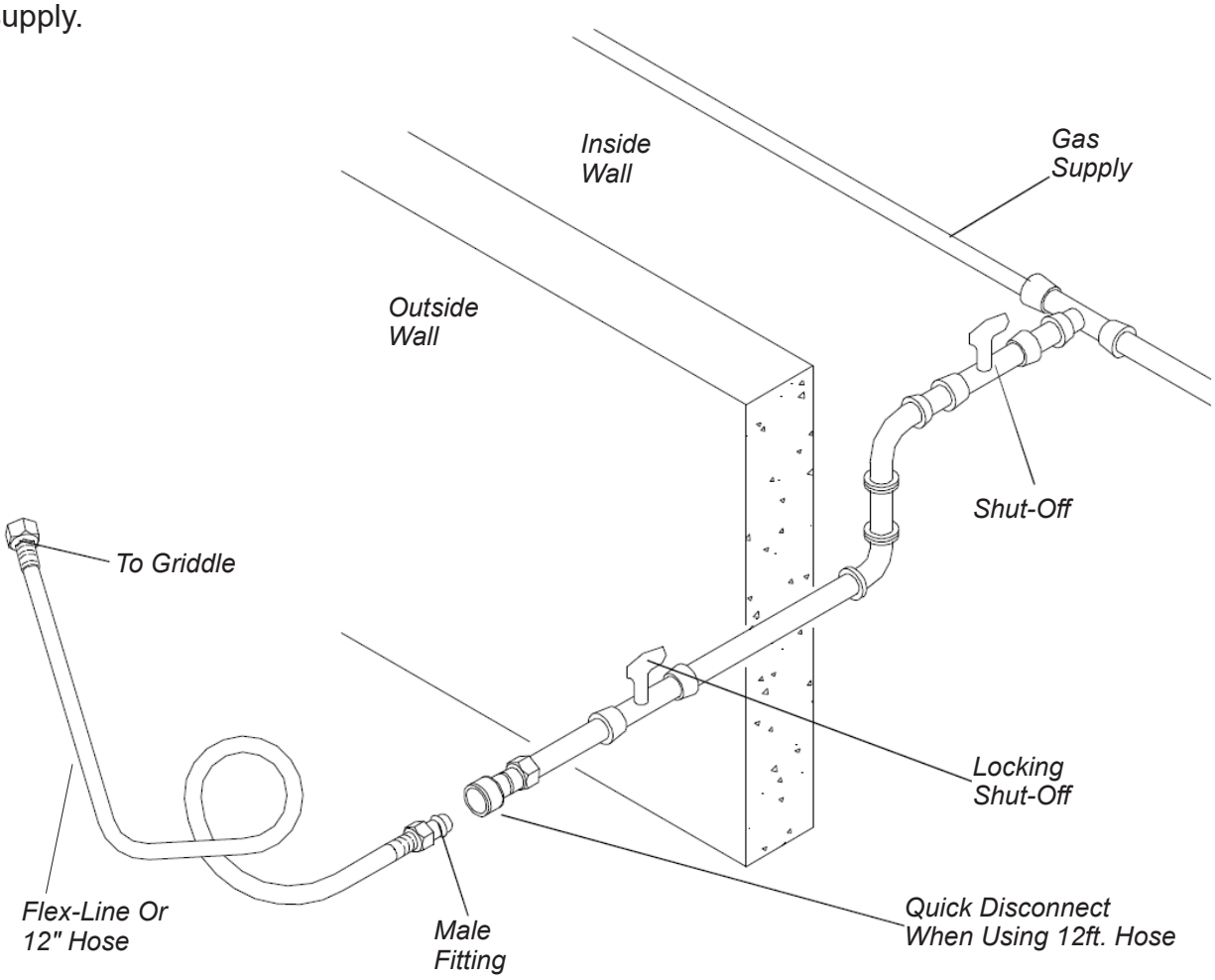

Gas Requirements And Hook-up (Cont'd.)

GAS SAFETY INSTRUCTIONS

Install a Shut-Off Valve at the gas supply source outdoors at a point after the gas pipe exits the outside wall and before the flex-line or quick-disconnect hose. Or install it at the point before the gas line piping enters the ground.

Pipe sealing compound or pipe thread tape resistant to the action of natural gas must be used on all male pipe thread connections.

Disconnect your gas griddle from fuel source when the gas supply is being tested at high pressures.

This gas griddle and its individual shut-off valve must be disconnected from the gas supply pipe system during any pressure testing of that system at pressure in excess of 1/2 psi (3.5kpa). Turn off your gas griddle when the gas supply is being tested at low pressures. The griddle must be isolated from the gas supply pipe system by closing its individual manual shut-off valve during any pressure testing of the gas supply pipe system at pressures equal to or less than 1/2 psi (3.5kpa).

CHECK ALL CONNECTIONS FOR GAS LEAKS

Never test for leaks with an open flame. Prior to first use and at the beginning of each season, you must check for gas leaks. Follow these three steps:

1. Make a soap solution by mixing one part liquid detergent and one part water.
2. Turn the griddle Control Knobs to their full OFF positions. Next, turn the gas ON at the source.
3. Apply the soap solution to all gas connections. If bubbles appear in the soap solution the connections are not properly sealed. Check each fitting and tighten or repair as necessary.

Important Griddle Safety Information

1. **ALWAYS ENSURE THAT SOMEONE IS AT THE GRIDDLE AT ALL TIMES.**
2. Prior to using griddle ensure that all tie down wires have been removed from burners. Never operate the griddle in a windy area.
3. Avoid wearing loose-fitting garments or long sleeves while using the griddle. Never touch immediate surrounding metal surfaces with your bare hands as these areas become extremely hot during use and could cause burns.
4. Use an insulated glove or mitt when operating the griddle. Do not operate the griddle with the hood closed. Allow griddle to cool completely before replacing hood.
5. Never lean over hot griddle surface or look directly into the griddle when attempting to light. The griddle hood must be removed when lighting.
6. Do not heat unopened food containers as pressure build-up may cause container to burst.
7. Do not block openings found in the drip trough on the griddle plate. This will alter combustion airflow or trap excessive heat in the control area. This can result in melted knobs and ignition modules. Do not block openings found on the back of the griddle plate. These damages are specifically excluded from your warranty.
8. Never use charcoal in this gas griddle.
9. Be aware that cooking excessively fatty meats and other such products will cause flare ups. Internal fires or damage caused by flare-ups or the griddle being left unattended while cooking, are not the responsibility of Empire Comfort Systems and any resulting damage is not covered under the terms and conditions of our warranty.
10. Never griddle without the drip pan in place. The drip pan must be pushed all the way to the back of the griddle. Without the drip pan in place, hot grease could leak downward and produce a fire or explosion hazard.
11. Grease is extremely flammable. Let hot grease cool down before attempting to handle or dispose of it. The drip tray should be cleaned of grease on a regular basis.
12. Do not use the griddle until a leak check has been performed
13. Do not operate griddle under the influence of alcohol or drugs

BROILMASTER®
PREMIUM GRILLS

Converting Your Gas Griddle

Your BROILMASTER Gas Griddle comes equipped to be converted to the opposite gas. Each griddle comes "GAS SPECIFIC", and packed with a gas conversion kit. On the side of the GAS BBQ there will be a rating plate that specifies the "GAS TYPE" and orifice size as well as contains your SERIAL NUMBER for your warranty.

HOW DO I CONVERT MY GRIDDLE GAS TYPE?

A professional plumber or gas griddle professional should be used to convert your gas griddle. An conversion Orifice kit is included in your griddle.

GAS PROFESSIONAL INSTALLERS

Main Burners

1. You must remove the hood and griddle plate assemblies to see the main burners in the appliance.
2. On the back rear of each burner is a pin. Remove pin with a needle nose pliers.
3. To remove burner, pull burner upwards and slide burner toward the rear of the appliance. Repeat this process for each burner.
4. Where the burner was previously located, sitting over the main valve orifice through the hole in the front basin should now be empty space where you can see the orifice.
5. Inside the space you will find the end of the valve , with an orifice (brass fitting), screwed into the end of the valve stem that can be easily removed.
6. Carefully remove the orifice with a 6mm socket set and extension they are brass so be cautious not to strip.
7. Once the old orifice is removed, replace it with the new orifice provided with each gas griddle.
8. Replace burners and pins making sure that the orifices are inside and centered in the burner tubes.
9. For converting to LP, attach the provided brass elbow to the gas manifold fitting. You will need to purchase an LP hose and regulator (Empire part number BR0388) to connect the LP tank to the brass elbow.

Adjust Main Burner And Air Shutters

1. Light each burner and inspect burners for proper flame appearance.
2. The best flame appearance is a blue flame with yellow tip.
3. There is an air shutter found at the end of the main burner Venturi, which can be either opened or closed to make adjustments to the flame's appearance. The Air Shutter can be adjusted by loosening the screw and opening the air shutter, then closing it slowly until the flame starts to yellow. STOP and turn back 1/16", then tighten the screw. The flame should be blue with yellow tips.

Converting Your Gas Griddle (Cont'd.)

LOW HEAT ADJUSTMENT

The valves on the griddle feature an adjustable low setting. Due to fluctuations in gas pressure, heating value or gas conversion, you may feel it necessary to adjust gas flow in the low position. Do not adjust the infrared rear rotis or optional Sear burner. When doing this adjustment you will be wanting a Blue Flame with a Yellow Tip. Adjust the Valve to obtain this flame.

1. Light the burner.
2. Turn the control knob to the lowest setting (all the way counterclockwise). Remove the knob.
3. Insert a small thin flat tipped screwdriver into the adjustment screw hole and while viewing the burner flame, adjust to a minimum stable flame. Increase to left and decrease to right.

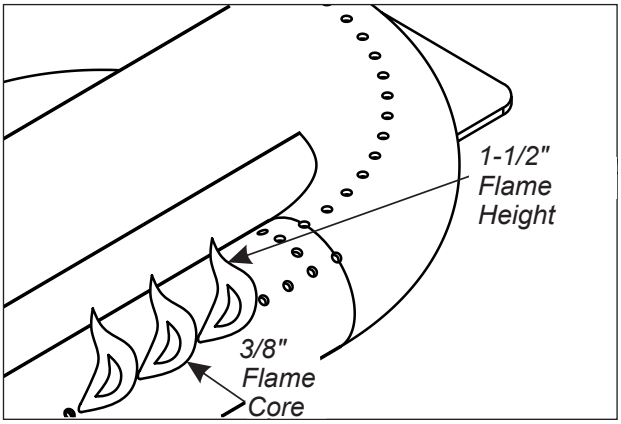

A. Remove knob.

B. Locate screw.

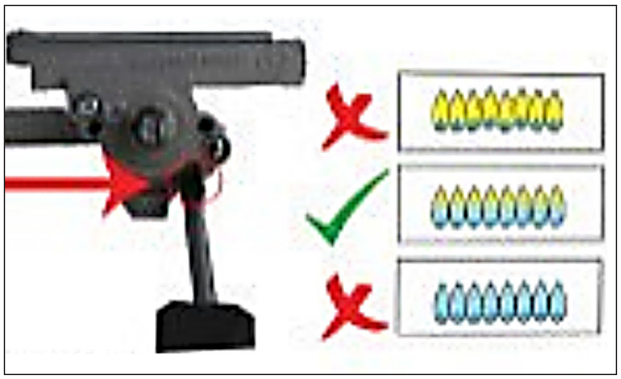

C. Adjust flame.

Converting Your Gas Griddle Gas Type

MAIN BURNER ORIFICE CHANGE

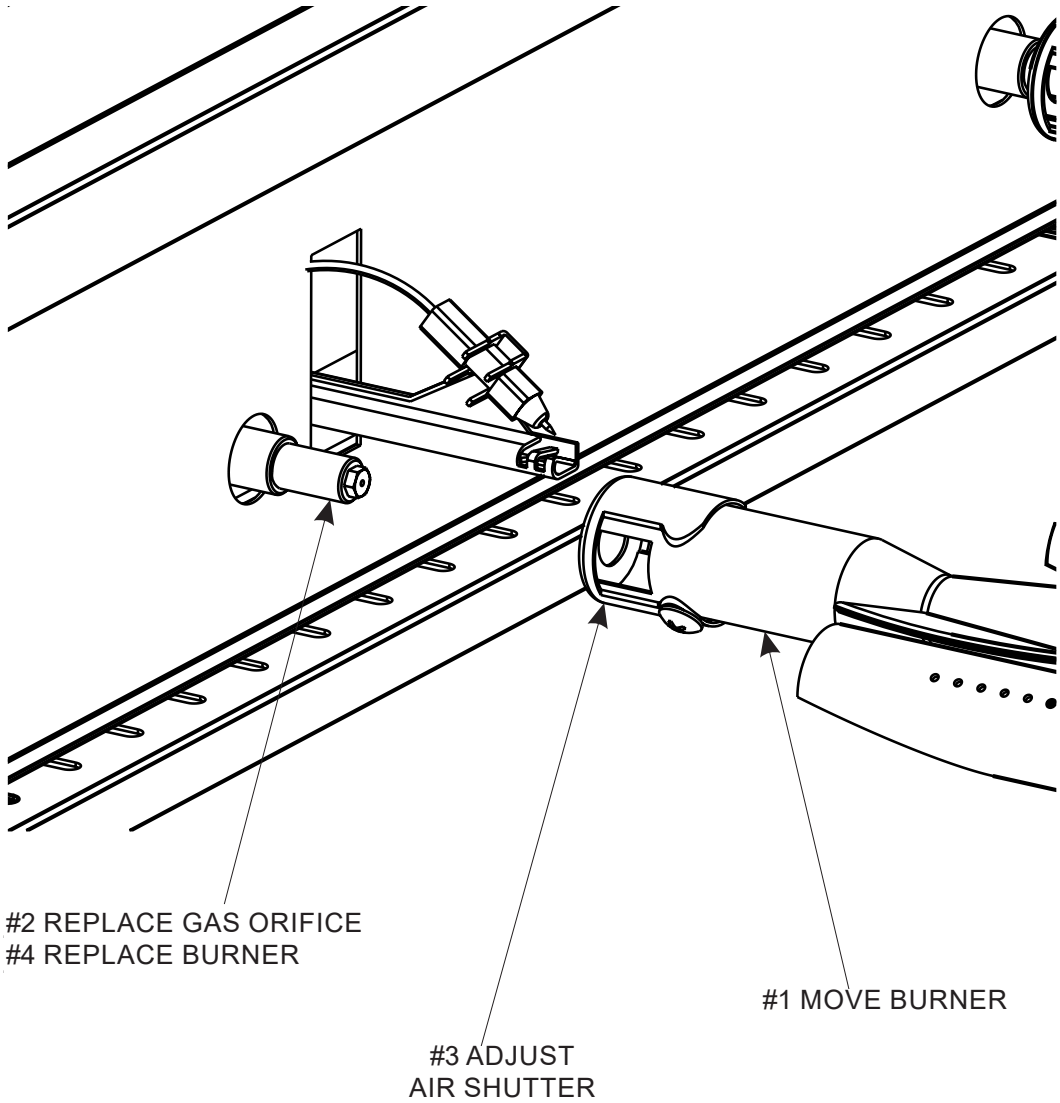

NOTE: Extra heat shield removed for clarity.

Lighting The Burners

LIGHTING THE MAIN GRIDDLE BURNERS:

1. REMOVE GRIDDLE HOOD (TOP COVER). DO NOT ATTEMPT TO LIGHT GRIDDLE WITH THE HOOD OPEN.
2. Check to ensure that all burner control knobs are set to OFF.
3. Turn on main gas supply.
4. Push burner knob in, turn slowly counterclockwise until gas begins to flow and hold for 2 seconds. Continue turning to the "HIGH" position. You should hear the "CLICK" and the burner will ignite. Release knob.
5. If burner does not light, turn knob to OFF, wait 5 minutes to allow gas to dissipate, and repeat step 4 above.
6. Topcover must be open when main burner(s) is in operation.

PREHEATING THE GRIDDLE

Before cooking, always preheat the griddle for best results. To preheat the griddle, light all main burners and set to HIGH. Allow to preheat for 10-15 minutes, or until the griddle reaches desired temperature.

After preheating, turn off all burners not required, and adjust remaining burners to desired temperature.

Do not leave the griddle unattended during the preheat cycle or at any time while the griddle is in use. Do not allow griddle to preheat for prolonged periods of time. Overheating the griddle can cause damage to the griddle and personal property.

Seasoning The Griddle (Optional)

Stainless steel griddles are not necessary to season prior to use. However, proper seasoning will ensure your cooking surface is easier to clean and non-stick. Also, seasoning helps prevent rusting, improves the lifespan of the cooking surface, and enhances flavors of your food.

1. Wear heat-protective gear to avoid any possible injuries.
2. Clean the surface of the griddle. You can use scrapers, spatulas, or a non-abrasive cleaner against the stainless steel grain. Avoid using any soaps if you can, but if necessary use a mild dish soap. Finish off cleaning by rinsing thoroughly with water and drying with a paper towel or microfiber cloth.
3. Apply a high-temperature oil such as canola, evenly across the cooking surface. Make sure the oil covers every inch of the surface, including the corners and sides, using a paper towel or brush to spread the oil if needed.
4. Light each burner and adjust to a high temperature (See Lighting Instructions). The ideal temperature range for seasoning stainless steel is between 400°F and 500°F (204°C and 260°C). Once this is maintained, wait until the oil starts to smoke. Different oils will have different smoke points, so the smoking temperature will be different.
5. Shut off each burner and allow the griddle to cool down completely. Once the griddle is safe to touch, use a paper towel to wipe off any excess oil and debris from the surface.
6. Repeat steps 3-5 at least three times. This will help build a layer of seasoning that will protect the cooking surface and enhance the flavor of your food by absorbing the oil's fatty acids and other nutrients.

Lighting The Griddle

1. Remove the hood and set aside. Wait five minutes to allow any accumulated gas to dissipate.
2. Keep your face as far away from griddle plate as possible.
3. Pull the lighting rod out from the right side of the control panel.
4. Attach a match to the alligator clip on the lighting rod and then light the match. Insert the match through the slot on the drip trough of the griddle plate, making sure the match touches the burner ports.
5. Slowly rotate the burner knob counter-clockwise to the HIGH position.
6. If the burner does not light after five seconds, turn the control knob clockwise to the OFF position. Wait five minutes for the gas to clear before attempting to re-light.
7. If the burner does not light after several attempts, immediately close all gas valves, then consult an authorized service technician.
8. Repeat this process to light the other burner, if desired. Properly discard all used matches.
9. DO NOT REPLACE THE HOOD WHILE BURNER(S) IS IN OPERATION.
10. Allow the lighting rod to cool completely before storing. To store the lighting rod, slide it through the hole on the control panel.
11. To shut off the burners, rotate the control knobs clockwise to the OFF position.
12. It is normal to hear a popping sound when the burners are turned off.

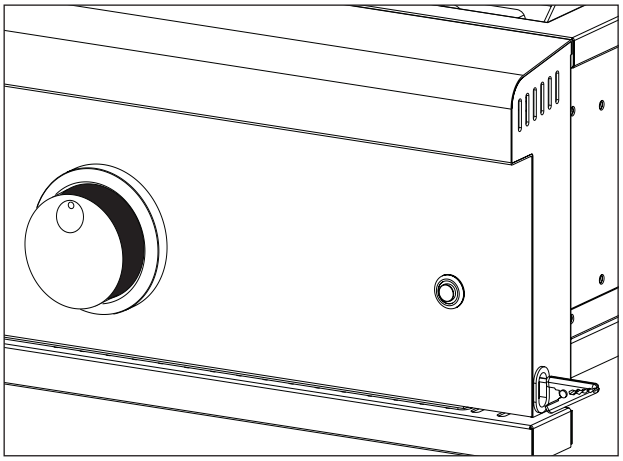

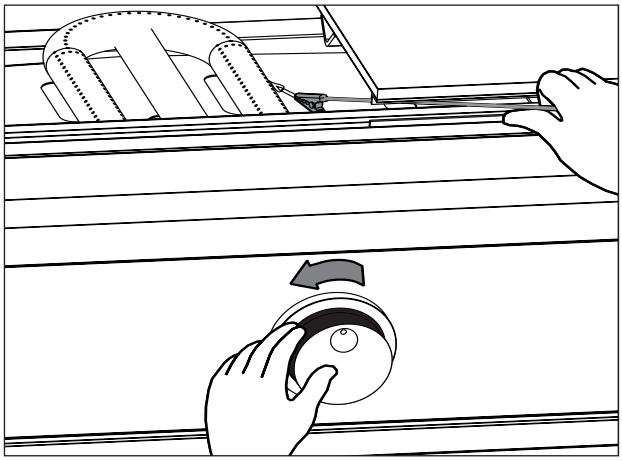

WARNING

Never lean over the griddle cooking area while lighting your gas griddle. Keep your face and body a safe distance (at least 18 inches) from the front of griddle when lighting your griddle by match.

WARNING

Do not use cigarette lighters to perform match-lighting procedures. Serious burns can occur and lighters can explode.

BROILMASTER®
PREMIUM GRILLS

Burner Type Identification

Your BROILMASTER griddle comes standard with a Stainless Steel Tube Burners.

MAIN BURNER -
This is the standard main griddle burner found under the griddle plate.

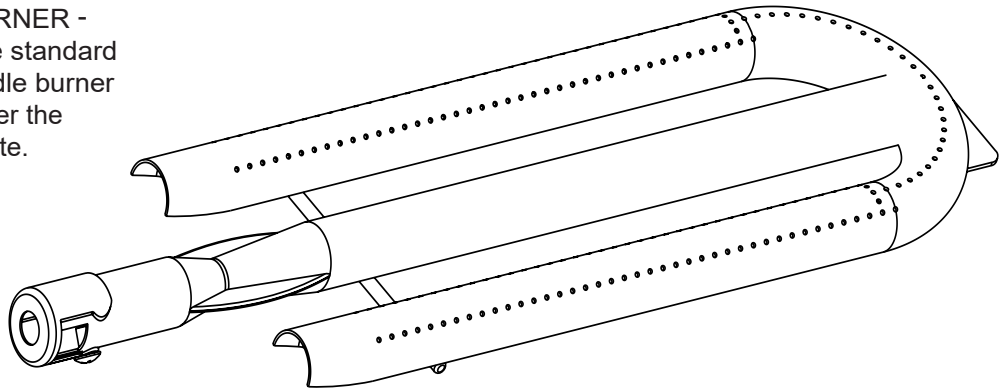

GRIDDLE PLATE -
Flat Cooking Surface With Backsplash And Drip Trough.

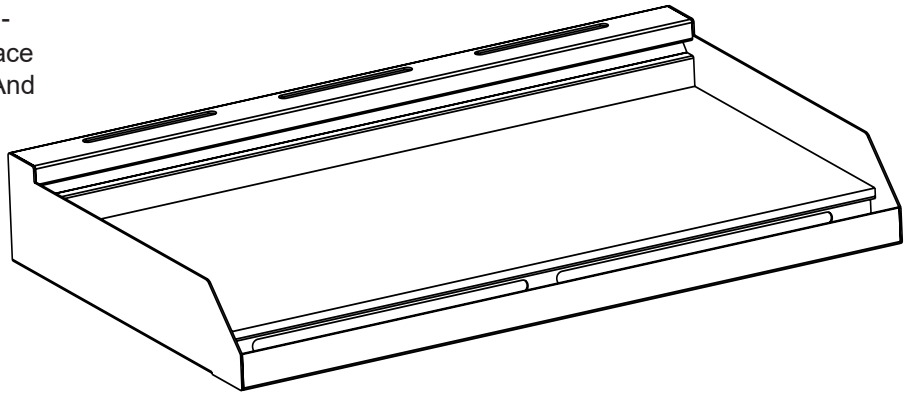

Using The BROILMASTER Griddle

This BROILMASTER griddle requires high heat for searing and proper browning of your food. Most direct foods are cooked at the high heat setting for the entire cooking time (with the lid open). However, when cooking large pieces of meat or poultry, it may be necessary to turn the heat to a lower setting after the initial browning. This cooks the food through without burning the outside. Foods cooked for a long time or foods basted with a marinade may need a lower heat setting near the end of the cooking time.

Direct Cooking Method

Direct cooking involves placing food on the side of the griddle over lit Burners. Use this method for foods that take less than 20 minutes to cook or to sear larger items at the start of the cooking process that will then be indirectly cooked to finish. Place items on the preheated surface and leave until they no longer stick. Turning too soon and too often is one of the most common grilling mistakes. Use a meat thermometer to achieve desired doneness and remove items one degree below how you would like to enjoy them, as the resting period before carving or consuming will raise the temperature.

Cook on the side with the burner on.

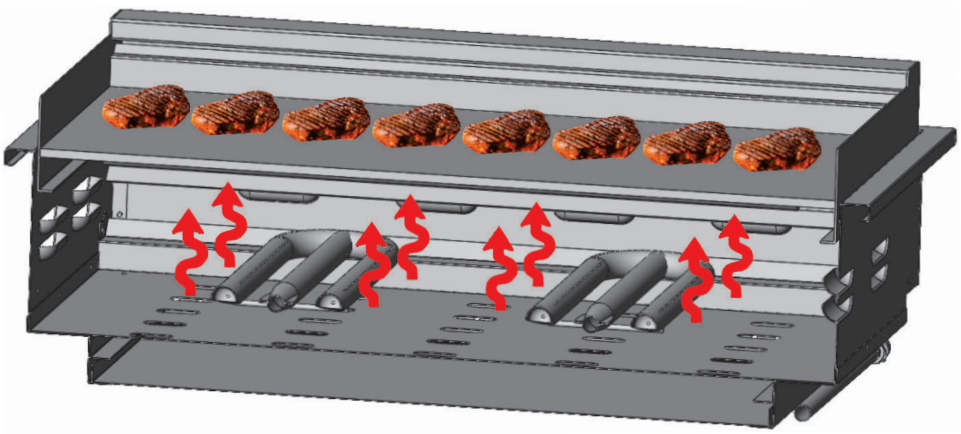

Indirect Cooking Method

Indirect cooking method is a popular alternative to direct heat cooking. Indirect cooking uses heat from adjacent burners to cook food and, in many cases, reduces the possibility of overcooked or overly browned food. Foods most appropriate for indirect cooking included breads, thicker pieces of chicken or roasts. Indirect cooking involves placing the food on the side of the griddle where the burners below are not lit.

Cook on the side with the burner off. Less heat on surface.

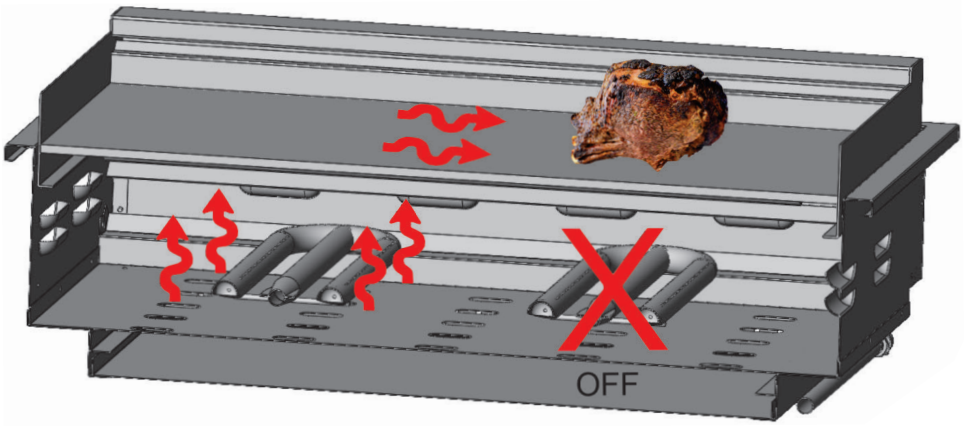

Cooking Tips

COOK FOOD TO PROPER TEMPERATURES

Cooking food safely requires that you raise the internal temperature of the meat high enough and for a long enough period of time to kill any food-borne bacteria that may cause illnesses.

Color is not the best indicator that food is safe to eat. Use a high-quality probe thermometer to be sure your food is properly cooked. Place the tip of an instant-read thermometer into the center of the thickest part of the food but at least 1/2 inch deep. Read the temperature after about 10 seconds. Follow the temperature guidelines for the type of food you're cooking.

The following guidelines are from the U.S. Food and Drug Administration Center for Food Safety and Applied Nutrition.

COOK TO INTERNAL TEMP			
Meat And Poultry	**Medium Rare**	**Medium**	**Well Done**
Fresh Beef - Medium Rare	145°F	160°F	170°F
Ground Turkey, Chicken	165°F		
Ground Veal, Beef, Lamb, Pork	145°F with 3 minutes of rest and then turn		
Fresh Pork - Medium	–	160°F	170°F
Chicken - Whole	165°F		
Turkey - Whole	165°F		
Poultry Breasts, Roast	165°F		
Poultry Thighs, Wings	165°F		
Stuffing (Cooked Alone Or In Bird)	165°F		
Duck And Goose	180°F		
Fresh Veal - Medium Rare	160°F		
Fresh Lamb - Medium Rare	145°F	160°F	170°F
Ham - Fresh (Raw)	145°F	160°F	170°F
Ham - Pre-Cooked (Reheat)	140°F		
SEAFOOD			
Fish	Cook until flesh turns opaque and flakes easily with a fork.		
Shrimp, Lobster, Crab	Cook until shells turn red and flesh becomes pearly opaque.		
Scallops	Should turn milky white or opaque and firm.		
Clams, Mussels, Oysters	Cook until shells open.		

*The above temperature settings are a guide, the temperatures may vary due to wind and outside ambient temperatures.

Burner Cleaning And Adjustment

Before removing burners ensure the gas supply is off and the knobs are in the "off" position. Make sure the griddle has completely cooled before proceeding.

TO REMOVE BURNERS:

Remove the hood and griddle plate. Remove the pin holding the burner in place. Grasp the burner, pull it up and slightly to the rear of the unit, so the burner head comes off the brass orifice at the front and remove. Be careful not to upset the air shutter position.

BURNER CLEANING:

To maximize griddle performance, clean the exterior of the burner with a wire brush. Clear stubborn scale with a metal scraper. Clear any clogged ports with a straightened paper clip. Never use a wooden toothpick as it may break off and clog the port. Shake out any debris through the air shutter. Use a flashlight to inspect the burner inlet to ensure it is not blocked. If obstructions can be seen, use a metal wire coat hanger that has been straightened out to clean.

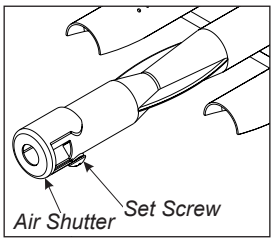

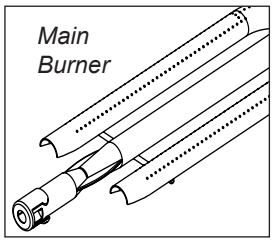

Please Note that the air mixture for LP gas and NG is different. Your gas BBQ will come preset for your gas type. If you find that you are not getting the best flame you can adjust the air shutter and the O2 mix with gas will change the flame. The flame coming from your burner is extremely important. If the flame is not correct you will be able to adjust the flame as described in the section above.

BETTER AIR ADJUSTMENT:

Each griddle burner is tested and adjusted at the factory prior to shipment; however, variations in the local gas supply or a conversion from one gas to another may make it necessary to adjust the burners. The flames of the Griddle burners should be visually checked, adjusting the air shutter by opening the air shutter and slowly closing it until the flame starts to yellow. STOP and turn back 1/16", and tighten the screw. Flame should be blue with yellow tips when adjusted correctly.

WARNING

It is critical to center every burner on its orifice.

WARNING

For safe operation, make sure the Orifices are inside the Burner Tubes before using your griddle. (See figure below). If the Orifice is not inside the Burner Tube, lighting the Burner may cause explosion and/or fire resulting in serious bodily injury and/or property damage.

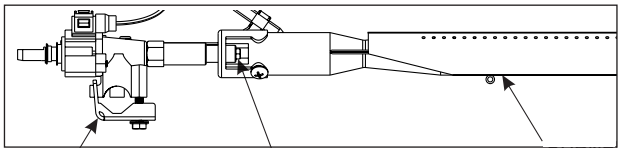

BROILMASTER®
PREMIUM GRILLS

WARNING

Spiders and small insects can spin webs and nest in the griddle burner ventures which can lead to a gas flow obstruction resulting in a fire in and around the burner tubes. This type of “FLASHBACK FIRE” can cause serious griddle damage and create an unsafe operating condition for the user.

To reduce the chance of FLASHBACK FIRE you must inspect and clean the ventures at least twice a year in summer and fall or whenever spiders are active in your area, and if your griddle has not been used for an extended period of time.

Remove the pin from the rear of each Main Burner using needle-nose pliers. Carefully lift each Burner up and away from the Gas Valve Orifice. Check and clean Burner/Venturi Tubes for insects and insect nests. A clogged tube can lead to a fire beneath the griddle.

FOR CLEANING, REFER TO METHODS 1-3 BELOW:

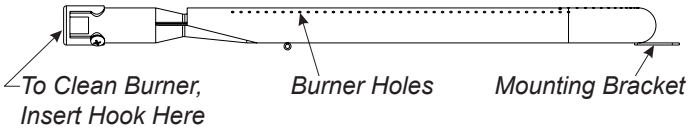

METHOD 1: Bend a stiff wire or wire coat hanger into a small hook as shown and run the hook through the Burner Tube and inside the Burner several times to remove debris.

METHOD 2: Use a bottle brush with a flexible handle and run the brush through the Burner Tube and inside the Burner several times to remove any debris.

METHOD 3: Use an air hose to force air through each Burner Tube. The forced air should pass debris or obstructions through the Burner and out the Ports.

WARNING

For safe operation ensure the Gas Valve Assembly Orifice is inside the Burner Tube before using your griddle. (See figure above). If the Orifice is not inside the Burner Tube, lighting the Burner may cause explosion and/or fire resulting in serious bodily injury and/or property damage.

WARNING

Cleaning The Griddle

Proper care and maintenance will keep your griddle in top operating condition and prolong its life. Follow these cleaning procedures on a timely basis and your griddle will stay clean and operate with minimum effort. CAUTION: Be sure your griddle is OFF and cool before cleaning.

CLEANING THE GRIDDLE PLATE - You can use scrapers, spatulas, or non-abrasive cleaner to remove food particles, grease, and/or oil from the griddle plate. Avoid using soaps if you can, but you can use a mild dish soap and rinse thoroughly, drying with a paper towel/microfiber cloth if necessary. Reseason the griddle plate if desired.

CLEANING THE GREASE TRAY - To reduce the chance of fire, the Grease Tray should be visually inspected before each griddle use. Remove any grease and wash Grease Tray with a mild soap and warm water solution.

CLEANING THE INSIDE OF THE GRIDDLE LID - Grease can build up on the inside of the Griddle lid over time. This grease can drip onto your deck or patio when the lid is opened. Visually inspect the inside of the Griddle Lid before each griddle use. Remove any grease and wash with a mild soap and warm water solution.

ROUTINE CLEANING OF THE GRIDDLE INTERIOR - Burning-off excess food after every cookout will keep it ready for instant use. However, at least every 6 months you must give the entire griddle a thorough cleaning to minimize your risk of grease fire and keep the griddle in top shape.

FOLLOW THESE STEPS:

1. Turn all Control Knobs to the full OFF position. Turn the LP gas tank valve to the full OFF position or turn off NAT gas supply.
2. Remove and clean the Griddle Plate and Burners as above.
3. Scrape out and brush the inside and bottom of the griddle with a scraper and fiber pad or nylon brush and wash with a mild soap and warm water solution. Rinse thoroughly and let dry.
4. Check each Orifice for obstruction.
5. Replace the Burners and griddle plate.
6. Reconnect the gas source and observe the Burner flame for correct operation.

Cleaning The Griddle (Cont'd.)

CLEANING EXTERIOR STAINLESS STEEL SURFACES:

Routine care and maintenance is required to preserve the appearance and corrosion resistance of stainless steel. The fact is stainless steel can corrode, rust and discolor under certain conditions. Rust is caused when regular steel particles in the atmosphere become attached to the stainless steel surface. Steel particles can also become attached to your griddle if you use steel wool or stiff wire brushes to clean the griddle instead of non-abrasive cloth, sponge or nylon cleaning tools. In coastal areas rust pits can develop on stainless surfaces that cannot be fully removed. Bleach and other chlorine based solutions used for household and pool cleaning can also cause corrosion to stainless steel. Weathering, extreme heat, smoke from cooking and machine oils used in the manufacturing process of stainless steel can cause stainless steel to turn tan in color. Although there are many factors which can affect the surface appearance of stainless steel, they do not affect the integrity of the steel or the performance of the griddle.

TO HELP MAINTAIN THE FINISH OF STAINLESS STEEL FOLLOW THESE CLEANING PROCEDURES FOR THE BEST RESULTS:

1. After every use (after your griddle has cooled down), wipe stainless surfaces with a soft, soapy cloth or sponge then rinse with water.
2. Be sure to remove all food particles, sauces or marinades from stainless steel because these can be highly acidic and damaging to stainless surfaces. Never use abrasive cleaners, scrubbers or stiff wire brushes of any type on your griddle.
3. Use a heat resistant Stainless Steel Cleaner and rub or wipe in the direction of the stainless steel grain or polish lines. Do not polish against the grain.

BROILMASTER Limited Warranty

WARRANTY TERMS FOR EMPIRE COMFORT SYSTEMS INC.

BROILMASTER Stainless Steel Gas Griddle

Models: BSB322G(N,P)

Empire Comfort Systems Inc. warranties this BROILMASTER stainless steel gas griddle to be free from defects at the time of purchase and for the periods specified below. The griddle must be installed by a qualified technician and must be maintained and operated safely, in accordance with the instructions in the owner's manual. This warranty applies to the original purchaser only and is not transferable. All warranty repairs must be accomplished by a qualified gas appliance technician.

Limited Lifetime Parts Warranty – Against Rust-Through
If the items listed below fail because of defective workmanship or material, Empire will repair or replace at Empire's option. The limited lifetime warranty provides one-time replacement of a covered component.

- Stainless Steel Griddle Housing
- Stainless Steel Cooking Grids and Stainless Steel Griddles
- Select Stainless Steel Components – Carts, Cast Stainless Steel Bowtie Burners, Stainless Steel Drip Pans, Side Burners, Side Burner Housings, and Warming Rack
- Stainless Steel Built-In Components – Built-In Sleeves, Access Door and Drawer Kits, Coolers, Sinks, and Vent Register Kits

Limited Five-Year Parts Warranty – Against Rust-Through
If the items listed below fail because of defective workmanship or material, Empire will repair or replace at Empire's option.
Stainless Steel V-Grates, Flame Tamers, and Heat Zone Partitions
Infrared Burners (main and rear rotisserie)

Limited One-Year Parts Warranty
If the items listed below fail because of defective workmanship or material, Empire will repair or replace at Empire's option.

- Valves, knobs, ignitors, labels, hoses, fittings, and all other parts and accessories – including those made from stainless steel – unless specified above

Duties Of The Owner
The appliance must be installed by a qualified installer and operated in accordance with the instructions furnished with the appliance.
A bill of sale, cancelled check, or payment record should be kept to verify purchase date and establish warranty period.
Ready access to the appliance for service

What Is Not Covered
Damages that might result from the use, misuse, or improper installation or storage of this appliance.
Travel, diagnostic costs and freight charges on warranted parts to and from the factory.
Claims that do not involve defective workmanship or materials.
Unauthorized service or parts replacements.
Removal and reinstallation cost.
Inoperable due to improper or lack of maintenance.
The costs of a service call to diagnose a problem and labor for replacement or repairs.

How To Get Service
To make a claim under this warranty, please have your receipt available and contact your installing dealer. Provide the dealer with the model number, serial number, type of gas, and purchase verification. The installing dealer is responsible for providing service and will contact the factory to initiate any warranted parts replacements. Empire will make replacement parts available at the factory. Shipping expenses are not covered.

Your Rights Under The Law
This warranty gives you specific legal rights, and you may also have other rights, which vary from state to state.

BROILMASTER®
PREMIUM GRILLS

MASTER PARTS DISTRIBUTOR LIST

To Order Parts Under Warranty, please contact your local Empire dealer. See the dealer locator at www.empirecomfort.com. To provide warranty service, your dealer will need your name and address, purchase date and serial number, and the nature of the problem with the unit. To Order Parts After the Warranty Period, please contact your dealer or one of the Master Parts Distributors listed below. This list changes from time to time. For the current list, please click on the Master Parts button at www.empirecomfort.com. Please note: Master Parts Distributors are independent businesses that stock the most commonly ordered Original Equipment repair parts for Heaters, Griddles, and Fireplaces manufactured by Empire Comfort Systems Inc.

Dey Distributing
1401 Willow Lake Boulevard
Vadnais Heights, MN 55101

Phone: 651-490-9191
Toll Free: 800-397-1339
Website: www.deydistributing.com
Parts: Heater, Hearth and Griddles

F. W. Webb Company
200 Locust Street
Hartford, CT 06114

Phone: 860-722-2433
Toll Free: 800-243-9360
Fax: 860-293-0479
Toll Free Fax: 800-274-2004
Website: www.fwwebb.com
Parts: Heater, Hearth and Griddles

East Coast Energy Products
10 East Route 36
West Long Branch, NJ 07764

Phone: 732-870-8809
Toll Free: 800-755-8809
Fax: 732-870-8811
Website: www.eastcoastenergy.com
Parts: Heater, Hearth and Griddles

HOW TO ORDER REPAIR PARTS

Parts Not Under Warranty

Parts can be ordered through your Service Person, Dealer, or a Master Parts Distributor. See this page for the Master Parts Distributors list. For best results, the **service person or dealer** should order parts through the distributor. Parts can be shipped directly to the **service person/dealer**.

Warranty Parts

Warranty parts will need a proof of purchase and can be ordered by your Service Person or Dealer. Proof of purchase is **required** for warranty parts.

All parts listed in the Parts List have a Part Number. When ordering parts, first obtain the Model Number and Serial Number from the name plate on your equipment. Then determine the Part Number (**not** the Index Number) and the Description of each part from the following illustration and part list. Be sure to give all this information . . .

Appliance Model Number _____ Part Description _____

Appliance Serial Number _____ Part Number _____

Type of Gas (Propane or Natural) _____

Do not order bolts, screws, washers or nuts. They are standard hardware items and can be purchased at any local hardware store. Shipments contingent upon strikes, fires and all causes beyond our control.

Your BROILMASTER Premium Gas Griddle is identified by model number, serial number, and gas type. This information is provided on a product identification label located on the left side of the griddle and under the griddle's drip tray. For your convenience, complete this section for future reference when contacting your dealer.

BROILMASTER®
PREMIUM GRILLS

Contacting Your BROILMASTER Dealer

Before calling your BROILMASTER Dealer, please make sure you have the following information:

- Model number
- Date of purchase
- Proof of purchase by the original owner
- Serial number

The serial number can be located on the rating plate which is located on the left side of the griddle or on the pull-out drip tray lighting instructions and also on the underside of the drip tray.

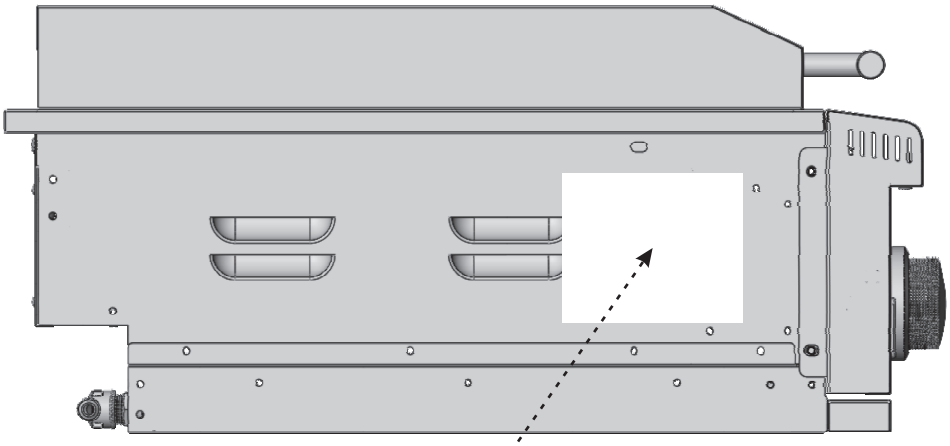

EMPIRE
COMFORT SYSTEMS

CONFORMS TO:
ANS Z21.58-2018/CSA 1.6 - 2018
OUTDOOR COOKING GAS APPLIANCES

FOR OUTDOOR USE ONLY

	MODEL	ORIFICE SIZE	GAS TYPE	TOTAL INPUT BTU'S/HR
☐	BSB322GP-1	1.30mm	PROPANE	36000
☐	BSB322GN-1	#50	NATURAL GAS	36000

RATING PLATE

WARNING: Fuels used in gas or oil-fired appliances, and the products of combustion of such fuels, contain chemicals known to the State of California to cause cancer, birth defects and/or other reproductive harm. This warning is issued pursuant to California Health & Safety Code Sec. 25249.6

PROPANE MODELS:
Do not store a Spare LP-gas cylinder under or near this appliance. Never fill the gas cylinder beyond 80% full. Storage of gas cylinder under or near this appliance and/or overfilling of this cylinder may cause a fire resulting in death or serious injury. CAUTION. A LP gas pressure regulator set at 11" WC MUST be used with this gas appliance. Turn off LP supply at Cylinder when this appliance is not in use. If stored indoors, detach and leave cylinder outdoors.

NOTE:
Do not place Under any Combustible Surface Minimum clearance to adjacent combustible construction is 16" from sides & 16" from the back of the hood. Always follow all City and Local codes. A Permit may be required and Your local City will provide this permit. Always use a certified professional gas appliance installer.

Only for installation in a built-in enclosure constructed of non-combustible materials.

Top cover must be open when main burner(s) is in operation.

GAS-FIRED
c UL us
LISTED
MH 46147

SERIAL# _____

Belleville, IL USA

BROILMASTER®
PREMIUM GRILLS

BROILMASTER Parts List

Item No.	Description	Part No. BSB322
1	Broilmaster Logo	BR0028
2	Control Knob	BR0029
3	Bezel	BR0030
4	LED	BR0038
5	LED Wiring Harness	BR0039
6	LED Heat Shield	BR0350
7	Valve Grommet	BR0045
8	Switch, Push Button	BR0194
9	Handle	BR0260
10a	Main Burner, LP	BR0362
10b	Main Burner, NAT	BR0363
11	Gas Manifold	BR0364
12	Transformer	BR0365
13	Hood	BR0366
14	Drip Tray	BR0367
15	Control Panel	BR0368
16	Griddle Plate	BR0369
17	Firebox	BR0370
18	Power Supply Harness	BR0371
19a	Valve, LP	BR0373
19b	Valve, NAT	BR0372
20a	Orifice, LP, 1.30mm	BR0377
20b	Orifice, NAT, #50, 2.08mm	BR0376

Item No.	Description	Part No. BSB322
21	Brass Elbow (LP Only)	BR0259
22	LP Hose, Reg. (LP Only)	BR0388
23	Lighting Rod	BR0411
24	Lighting Rod Cover	BR0412
25	Control Panel Grommet	BR0413
Conversion Kits		**Part No. BSB322**
N/S	Natural to Propane	BR0375
N/S	Propane to Natural	BR0374

NOTE: Conversion kits contain 2 main burner orifices. LP Conversion kits contain 1 brass elbow. LP hose and regulator sold separately. (NAT Griddles Only).

NOTE: When ordering replacement main or rear burner valves, the corresponding gas orifices are included and pre-installed.

Parts Diagrams

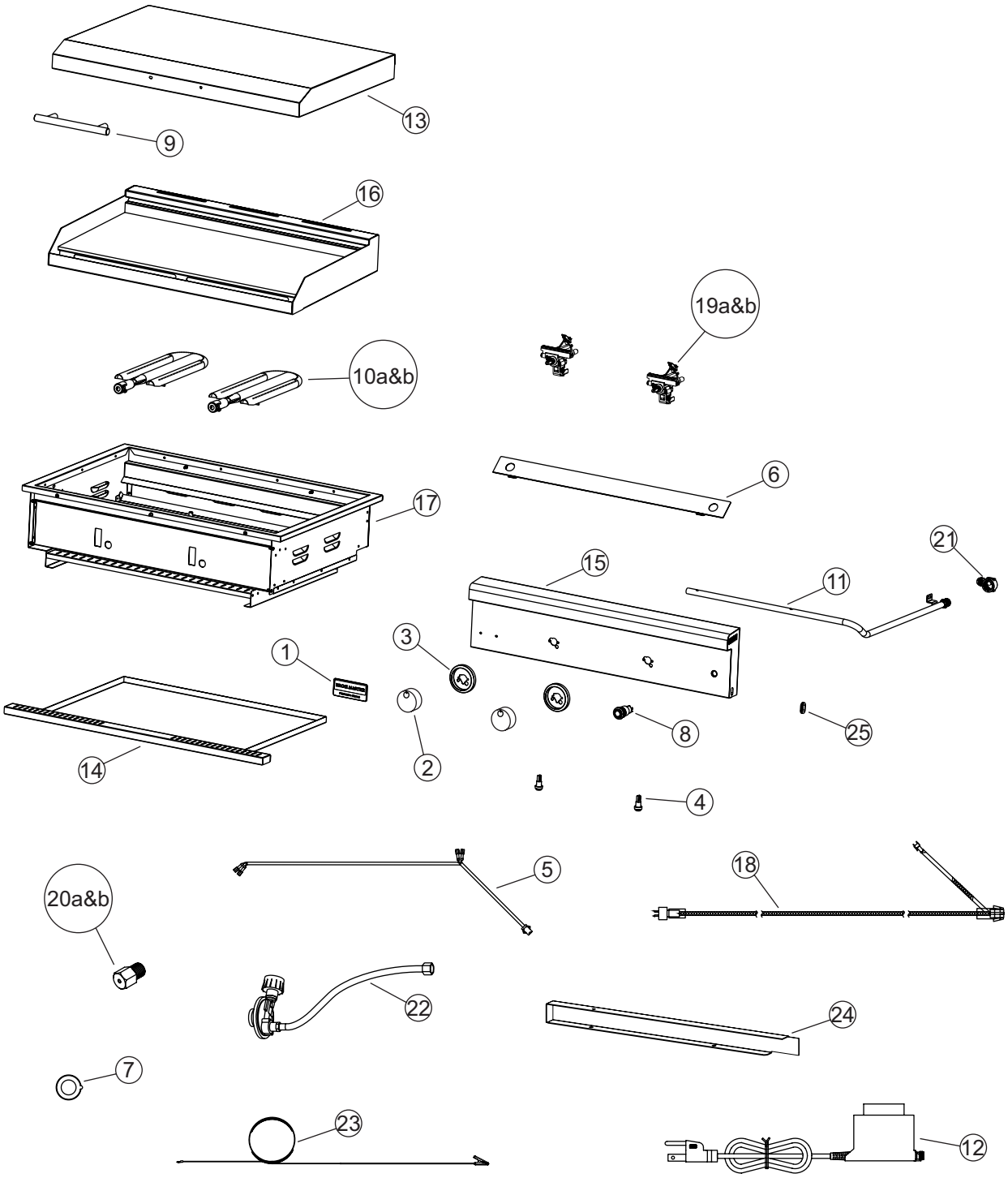

Sleeves, Side Burners, Covers And Island Accessories

SIDE BURNERS

PART NUMBER	SIDE BURNER
BSAF12DN	Single, 12 Inch, Drop-In With Top Controls
BSABF12N	Double, 12 Inch, Slide-In With Front Controls
BSABW16N	Power, 16 Inch, Slide-In With Front Controls

*Slide-In burners may be installed without a sleeve in an island made from non-combustible materials. The BSAF12DN drop-in side burner may be installed only in a griddle island made from non-combustible materials.

BUILT-IN INSULATED SLEEVES (FOR GRIDDLES AND ACCESSORY BURNERS)

PART NUMBER	DESCRIPTION	FITS
BSASL32	32" Insulated Sleeve For Griddle	BSB322G Griddle
BSASL12	12" Insulated Sleeve For Side Burner	BSABF12 Side Burner
BSASL16	16" Insulated Sleeve For Power Burner	BSABW16N Power Burner

ACCESSORIES FOR ALL BROILMASTER STAINLESS STEEL GRIDDLE

PART NUMBER	DESCRIPTION	FITS	
NG12	12-Foot Quick Disconnect Hose	BSB322G	BSB324(MG)

CARTS

PART NUMBER	DESCRIPTION	FITS
BSACT32	SS Cart With 2 Doors And Fixed Side Shelves	BSB322G Griddle

Sleeves, Side Burners, Covers And Island Accessories (Cont'd)

DOORS, DRAWERS

PART NUMBER	DOORS AND DRAWERS (STAINLESS STEEL)
BSAD1722	Single Door 17" W x 22" H
BSAD2422	Single Door 24" W x 22" H
BSAD2622D	Double Doors 26" W x 22" H (Fits Under 26" Griddle In Island)
BSAD3422D	Double Doors 34" W x 22" H (Fits Under 34" Griddle In Island)
BSAD4222D	Double Doors 42" W x 22" H (Fits Under 42" Griddle In Island)
BSAW1826R	Drawer For Roll-Out Trash Container, 18" W x 26" H
BSAW1826T	Triple Drawer, 18" W x 26" H
BSAW2022D	Double Drawer, 20" W x 22" H
BSAW2022	Single Drawer – For LP Tank Or Trash Can 20" W x 22" H
BSAW3422SD	Single Door With Double Drawer 34" W x 22" H (Fits Under 34" Griddle In Island)
BSAW4222ST	Single Door With Triple Drawer 42" W x 22" H (Fits Under 42" Griddle In Island)
BRB-1	S/S Vent Register Kit 10" x 2 1/4" Opening (2 Per Kit)

BAR

PART NUMBER	BAR ACCESSORIES
BSACL	Insulated Cooler – Slide-In
BSACW3015W	Drawer – Storage / Cooler, 30" W x 15" H
BSASF	Bar Sink With Faucet – Slide-In

Appliance Service History

Date	Dealer Name	Service Technician Name	Service Performed / Notes

BROILMASTER®
PREMIUM GRILLS

Appliance Service History

Date	Dealer Name	Service Technician Name	Service Performed / Notes

BROILMASTER®
PREMIUM GRILLS

BROILMASTER®

PREMIUM GRILLS

BROILMASTER

A Division of Empire Comfort Systems, Inc.
Visit our web site at www.broilmaster.com
If you have a general question about
our products, please e-mail us
at info@empirecomfort.com.
If you have a service or repair question,
please contact your dealer.

GAS-FIRED
C UL US
LISTED