FIREMAGIC

AURORA

BUILT-IN OUTDOOR GAS PIZZA OVEN

4600(P)

INSTALLATION AND OWNER'S MANUAL

INSTALLER: Leave these instructions with consumer.
CONSUMER: Retain for future reference.

IMPORTANT: READ THESE INSTRUCTIONS CAREFULLY BEFORE STARTING INSTALLATION OR USE.

WARNINGS AND SAFETY CODES

ONLY TO BE USED OUTDOORS

CODE AND SUPPLY REQUIREMENTS: Installation must conform with local codes or, in the absence of local codes, with either the *National Fuel Gas Code*, ANSI 2223.1/NFPA 54, or the *Natural Gas and Propane Installation Code*, CSA B149.1, or the *Propane Storage and Handling Code*, CSA B149.2, as applicable.

The outdoor cooking gas appliance and its individual shut-off valve must be disconnected from the gas supply piping system during any pressure testing of that system at test pressures in excess of 1/2 psi (3.5 kPa).

The outdoor cooking gas appliance must be isolated from the gas supply piping system by closing its individual manual shut-off valve during any pressure testing of the gas supply piping system at test pressures equal to or less than 1/2 psi (3.5 kPa).

This appliance is designed as an <u>attended appliance</u>. <u>DO NOT</u> leave this appliance burning when unattended.

If an external electrical source is utilized, the outdoor cooking gas appliance, when installed, must be electrically grounded in accordance with local codes or, in the absence of local codes, with the *National Electrical Code*, ANSI/NFPA 70, or the *Canadian Electrical Code*, Part I, CSA C22.1.

Keep any electrical supply cord and the fuel supply hose away from any heated surfaces.

PFS® C US

Certifié à : **ANSI Z21.58**
CSA 1.6

⚠ DANGER:

IF YOU SMELL GAS:

- Shut off gas to the appliance.
- Extinguish any open flame.
- Open oven door.
- If odour continues, keep away from the appliance and ***immediately*** call your gas supplier or the fire department.

⚠ WARNING:

- Do not store or use gasoline or other flammable liquids or vapours in the vicinity of this or any other appliance.
- An LP cylinder not connected for use shall not be stored in the vicinity of this or any other appliance.

⚠ WARNING:

Improper installation, adjustment, alteration, service, or maintenance can cause injury or property damage. For proper installation, refer to the installation instructions. For assistance or additional information, consult a qualified professional service technician, service agency, or the gas supplier.

Proper operation of your pizza oven requires prompt and periodic maintenance. See the SERVICING AND CLEANING section for details.

FIREMAGIC

AURORA

FOUR À PIZZA À GAZ EXTÉRIEUR INTÉGRÉ 4600(P)

INSTALLATION ET LE MANUEL DU PROPRIÉTAIRE

INSTALLATEUR: laissez ces instructions au consommateur.
CONSOMMATEUR: À conserver pour référence future.

IMPORTANT: LIRE ATTENTIVEMENT CES INSTRUCTIONS AVANT DE COMMENCER L'INSTALLATION OU L'UTILISATION.

AVERTISSEMENTS ET CODES DE SÉCURITÉ

À UTILISER UNIQUEMENT À L'EXTÉRIEUR

EXIGENCES EN MATIÈRE DE CODE ET D'APPROVISIONNEMENT: L'installation doit être conforme aux codes locaux ou, en l'absence de codes locaux, soit au *National Fuel Gas Code*, ANSI 2223.1/NFPA 54, soit au *Natural Gas and Propane Installation Code*, CSA B149.1, soit au *Code de stockage et de manipulation du propane*, CSA B149.2, selon le cas.

L'appareil de cuisson au gaz extérieur et son robinet d'arrêt individuel doivent être déconnectés du système de tuyauterie d'alimentation en gaz pendant tout essai de pression de ce système à des pressions d'essai supérieures à 1/2 psi (3,5 kPa).

L'appareil de cuisson au gaz extérieur doit être isolé du système de tuyauterie d'alimentation en gaz en fermant son robinet d'arrêt manuel individuel pendant tout test de pression du système de tuyauterie d'alimentation en gaz à des pressions d'essai égales ou inférieures à 1/2 psi (3,5 kPa).

Cet appareil est conçu comme un appareil surveillé. NE PAS laisser cet appareil brûler sans surveillance.

Si une source électrique externe est utilisée, l'appareil à gaz de cuisson extérieur, lorsqu'il est installé, doit être mis à la terre conformément aux codes locaux ou, en l'absence de codes locaux, avec le *National Electrical Code*, ANSI/NFPA 70, ou le *Canadian Electrical Code*. Code, Partie I, CSA C22.1. Gardez tout cordon d'alimentation électrique et le tuyau d'alimentation en carburant à l'écart de toute surface chauffée.

PFS C US **Certifié à :** **ANSI Z21.58**
CSA 1.6

⚠ DANGER:

SI VOUS SENTEZ DU GAZ:

- Coupez le gaz de l'appareil.
- Éteignez toute flamme nue.
- Ouvrir la porte du four.
- Si l'odeur persiste, éloignez-vous de l'appareil et appelez ***immédiatement*** votre fournisseur de gaz ou les pompiers.

⚠ ATTENTION:

- N'entreposez pas et n'utilisez pas d'essence ou d'autres liquides ou vapeurs inflammables à proximité de cet appareil ou de tout autre appareil.
- Une bouteille de GPL non connectée pour utilisation ne doit pas être stockée à proximité de cet appareil ou de tout autre appareil.

⚠ ATTENTION:

Une installation, un réglage, une modification, un entretien ou une maintenance inappropriés peuvent causer des blessures ou des dommages matériels. Pour une installation correcte, reportez-vous aux instructions d'installation. Pour obtenir de l'aide ou des informations supplémentaires, consultez un technicien de service professionnel qualifié, une agence de service ou le fournisseur de gaz.

Le bon fonctionnement de votre four à pizza nécessite un entretien rapide et périodique. Voir la section ENTRETIEN ET NETTOYAGE pour plus de détails.

CONTENTS

GETTING STARTED

AVERTISSEMENTS 4
INSTALLATION, OPERATION, AND SAFETY INFORMATION 5
ELECTRICAL CONNECTIONS 5
GAS SAFETY INFORMATION 6
WARNING 6
WHEN USING PROPANE GAS 6
WHEN USING NATURAL GAS 6
INSTALLATION SAFETY GUIDELINES 6
OPERATING THE UNIT SAFELY AND CORRECTLY 6
SAFE USE & MAINTENANCE OF PROPANE GAS CYLINDERS 7
ENCLOSURE REQUIREMENTS 11
ENCLOSURE PARAMETERS 11
INSTALLATION REQUIREMENTS 17
EXHAUST HOOD 17
REAR WALL CLEARANCES 18
BACKSPLASH CLEARANCE (if applicable) 18
CONTROL PANEL CLEARANCES 19
COMBUSTION AIR AND COOLING AIRFLOW 19
DIAGRAMMATICAL REPRESENTATIONS OF OUTDOOR AREAS 20
ELECTRICAL SAFETY 21
MODEL SPECIFICATIONS 22
BUILT-IN PIZZA OVEN WIRING DIAGRAM 23
AURORA PIZZA OVEN REPLACEMENT PARTS LIST 24

INSTALLATION

INSTALLATION 26
BUILD / CONSTRUCT ENCLOSURE 26
INSTALL INSULATING LINER (if applicable) 26
SLIDE UNIT INTO ENCLOSURE CUTOUT 26
CONNECT GAS SUPPLY 28
LEAK TEST 28
LIGHTING TEST 29
INSPECT PILOT FLAME 29
INSTALL PIZZA STONE 30
INSTALL BAKING RACK (if desired) 30

USE, CARE, & SERVICE

PIZZA OVEN CONTROLS AND FEATURES 31
USING THE PIZZA OVEN 32
LIGHTING (IGNITION) INSTRUCTIONS 35
ELECTRONIC LIGHTING 35
SHUTTING OFF THE UNIT 35
SERVICING AND CLEANING 36
CLEANING YOUR PIZZA OVEN 36
REPLACING HALOGEN BULBS 38
CONTROL PANEL REMOVAL 39
BAKING RACK REMOVAL 40
PIZZA STONE REMOVAL 40
HEAT DISTRIBUTION GRID REMOVAL 41
BURNER REMOVAL 41
INSPECT PILOT AND ITS FLAME (if needed) 42
AIR SHUTTER ADJUSTMENT / BURNER FLAME INSPECTION 43
TROUBLESHOOTING 44
WARRANTY 46

⚠ AVERTISSEMENTS

Avertissements généraux :

- Cet appareil est destiné à une utilisation en extérieur uniquement. Si l'appareil est entreposé à l'intérieur, retirez les bouteilles et gardez-les à l'extérieur.
- Ne couvrez pas immédiatement l'appareil après utilisation. Laissez-le refroidir avant de le couvrir, de le déplacer ou de le ranger. Ne pas respecter cette mesure de sécurité pourrait entraîner un incendie causant des dommages matériels, des blessures ou la mort.
- Ne pas utiliser cet appareil sous une surface combustible.
- Ne pas utiliser cet appareil sous un auvent. Le non respect de cette mesure de sécurité pourrait entraîner un incendie ou des blessures.
- Distance minimale requise entre les parois latérales et arrière de l'appareil et toute construction combustible (45,7 cm à partir des parois latérales et 45,7 cm à partir de l'arrière). Veuillez consulter la section des distances de sécurité pour tous les détails.
- Un régulateur de pression de gaz doit être utilisé avec cet appareil de cuisson à gaz pour l'extérieur. Ce régulateur doit être réglé pour une pression de sortie de 5 pouces colonne d'eau pour le gaz naturel et de 10 pouces pour le propane. Veuillez consulter la liste des pièces de ce manuel du propriétaire pour vérifier si un régulateur est inclus avec votre appareil.
- LE RÉGULATEUR DOIT ÊTRE ÉVALUÉ POUR UN MAXIMUM DE 1/2 (LIVRES PAR POUCES CARRÉS). Veuillez consulter la liste des pièces de ce manuel du propriétaire pour vérifier si un régulateur est inclus avec votre appareil. SI VOTRE OFFRE DE GAZ EST SUPÉRIEURE DE 1/2 (LIVRES PAR POUCES CARRÉS), UN RÉGULATEUR ADDITIONNEL DOIT ÊTRE INSTALLÉ AVANT L'UTILISATION DE L'APPAREIL. VEUILLEZ CONSULTER LA SECTION DES CONDITIONS D'ALIMENTATION EN GAZ POUR LA PRESSION APPROPRIÉE DE L'ALIMENTATION EN GAZ.
- Ne couvrez jamais la surface entière de cuisine ou de gril de gauffreuses ou de casseroles. La surchauffe se produira et les brûleurs ne seront pas très performants quand la chaleur de combustion est emprisonnée au-dessous de la surface à cuire.
- Ne jamais pulvériser d'eau sur une unité de gaz chaude, car cela peut endommager les surfaces ou les composants.

Avertissements de propane :

- Une fuite de GPL peut causer une incendie ou une explosion si enflammée entraînant des blessures corporelles graves ou la mort.
- Communiquez avec le fournisseur de GPL pour les réparations ou pour disposer de qules bouteille ou du GPL non utilisé.

INSTALLATION, OPERATION, AND SAFETY INFORMATION

1. Wear gloves and use extreme caution whenever installing and handling this product and its accessories as certain components have sharp edges that can cause personal injury.
2. The outdoor appliance and surrounding area MUST remain clear of flammable substances such as gasoline, yard debris, wood, etc. Maintain a minimum horizontal clearance of 18" (in all directions) from combustible materials/items.
3. Do not block the front air inlet along the bottom of the control panel. See the COMBUSTION AIR AND COOLING AIRFLOW section under INSTALLATION REQUIREMENTS for details.
4. **This unit must be installed so that the required vent openings and surrounding area of the enclosure remain clear and free at all times. See the ENCLOSURE REQUIREMENTS section for details.**
5. **When using propane gas: the propane cylinder, regulator, and rubber hose must be in a location not subject to temperatures above 125° F (51° C).**
6. Before each use, ensure the flames on each burner burn evenly along the entire burner with a steady flame (mostly blue). If burner flames are not normal, check and clean the orifice and burner/venturi tubes for insects and insect nests. A clogged tube can lead to a fire beneath the unit. A proper flame pattern will ensure safe operation and optimal performance. Adjust the air shutter as needed to achieve proper flame pattern (see AIR SHUTTER ADJUSTMENT/BURNER FLAME INSPECTION section, under SERVICING AND CLEANING for details).
7. The in-line gas valve or gas cylinder valve must always be shut OFF when the unit is not in use.
8. Whenever reconnecting any wires, apply a small amount of dielectric grease to the male connector, then make the connection. This will ensure conductivity and prevent moisture from affecting the contact.
9. **Adults MUST be present when this gas appliance is operating. This appliance MUST NOT be left burning when unattended.**
10. **Do not store combustible materials in the enclosure directly beneath the appliance.**

⚠ WARNING

NEVER cover slots, holes, or passages in the oven bottom or cover an entire rack with material such as aluminum foil. Doing so blocks air flow through the oven and may cause carbon monoxide poisoning.

Aluminum foil linings may trap heat causing a fire hazard.

CAUTION: FOR YOUR SAFETY, you must provide openings in the enclosure for replacement air and ventilation (in case of possible leakage from gas connections or propane cylinders). Failure to do so may result in a fire or explosion causing property damage, bodily injury, or death. See the ENCLOSURE REQUIREMENTS section for details.

IMPORTANT: IN THE EVENT OF A GREASE FIRE, IMMEDIATELY SHUT OFF THE MAIN GAS VALVE TO THE UNIT. KEEP THE DOOR OPEN AND ALLOW THE FIRE TO EXTINGUISH ITSELF. KEEP AT A SAFE DISTANCE. A THOROUGH INSPECTION BY A QUALIFIED PROFESSIONAL SERVICE TECHNICIAN SHOULD BE CONDUCTED BEFORE FUTURE USE OF YOUR UNIT. THE SERVICE TECHNICIAN WILL CHECK THE SYSTEM FOR GAS LEAKS AND WILL CHECK ALL ELECTRICAL WIRING FOR DAMAGE. ALL GAS LEAKS AND WIRING MUST BE REPAIRED PRIOR TO FUTURE USE.

The unit serial number tag can be found affixed to the pizza oven body behind the control panel (on an aluminum tag). The unit rating label is located behind the control panel.

ELECTRICAL CONNECTIONS

A **120VAC (15 AMP minimum) GFCI GROUNDED three-wire receptacle** (not included) is required within the vicinity of the unit to provide power to it. The GFCI receptacle must be a WEATHER-PROOF IN-USE COVERED RECEPTACLE.

- **Observe the National Electric Code and all local codes.**
- **Verify proper polarity of the receptacle.**
- **If an extension cord is used, ensure it is a three-wire GROUNDED cord that is rated for the power of the equipment, and is approved for outdoor use with a W-A marking. DO NOT use two-prong adapters.**
- **DO NOT TAMPER WITH THE EXTENSION CORD OR THE UNIT POWER-SUPPLY CORD.**

Important: ONLY REPLACE THE INTERIOR OVEN LIGHT WITH A 12V / 10 WATT HALOGEN BULB.

GAS SAFETY INFORMATION

WHEN OPERATING THIS GAS APPLIANCE, ALL INSTRUCTIONS AND WARNINGS MUST BE OBSERVED. FAILURE TO DO SO MAY RESULT IN A FIRE OR EXPLOSION CAUSING PROPERTY DAMAGE, BODILY INJURY, OR DEATH.

WARNING

This gas appliance and its enclosure MUST be plumbed and vented in accordance with local building and safety codes and should be approved by local code enforcement officials. This appliance MUST be installed and operated according to the information below.

FAILURE TO PROPERLY VENT THE ENCLOSURE MAY RESULT IN A FIRE OR EXPLOSION CAUSING PROPERTY DAMAGE, BODILY INJURY, OR DEATH.

A leaking gas connection or valve unintentionally left open will create a hazard.

WHEN USING PROPANE GAS

- **Propane gas** (also known as **L.P. gas**) is heavier than air and will accumulate or pool in an inadequately vented enclosure or recessed area.
- If a pool of **propane gas** is ignited, an explosion will occur. Adequate venting at the floor level, or the lowest point where gas could accumulate, will eliminate this danger.

  Refer to the **ENCLOSURE REQUIREMENTS** section.
  Observe all local codes.
- DO NOT store a spare propane-gas cylinder under or near the enclosure.

WHEN USING NATURAL GAS

- **Natural gas** is lighter than air and will accumulate at the top of an inadequately vented enclosure.
- If an accumulation of **natural gas** is ignited, an explosion will occur. Adequate venting at the top of the enclosure, or the highest point where gas could accumulate, will eliminate this danger.

  Refer to the **ENCLOSURE REQUIREMENTS** section.
  Observe all local codes.

INSTALLATION SAFETY GUIDELINES

THIS UNIT MUST BE INSTALLED SO THAT THE REQUIRED VENT OPENINGS AND SURROUNDING AREA OF THE ENCLOSURE REMAIN CLEAR AND FREE AT ALL TIMES. See the ENCLOSURE REQUIREMENTS section for details.

CAUTION: FOR YOUR SAFETY, you must provide openings in the enclosure for replacement air and ventilation (in case of possible leakage from gas connections or propane cylinders). Failure to do so may result in a fire or explosion causing property damage, bodily injury, or death. See the ENCLOSURE REQUIREMENTS section for details.

The gas cylinder, regulator, and rubber hose must be in a location not subject to temperatures above 125° F (51° C).

IF A PROPANE CYLINDER IS INSTALLED INSIDE OF THE ENCLOSURE, THE GUIDELINES FOUND IN THE **ENCLOSURE REQUIREMENTS** SECTION MUST BE FOLLOWED.

OPERATING THE UNIT SAFELY AND CORRECTLY

Every time you use the unit, **make sure that:**

1. The area around the unit is clear and free from combustible materials, gasoline and flammable vapours and liquids.
2. There is no blockage of the airflow through the vent openings located on the enclosure.
3. The hose is inspected (if applicable). See SAFE USE & MAINTENANCE OF PROPANE-GAS CYLINDERS section.

DO NOT store any combustible materials, gasoline, and any other flammable vapours/liquids in the vicinity of the unit. Provide adequate clearance for servicing and operation.

SAFE USE & MAINTENANCE OF PROPANE GAS CYLINDERS

IMPORTANT FOR YOUR SAFETY
READ AND FOLLOW ALL WARNINGS PROVIDED WITH THE PROPANE-GAS CYLINDER.
When operating this appliance with a propane-gas cylinder, these instructions and warnings **MUST** be observed.
FAILURE TO DO SO MAY RESULT IN A SERIOUS FIRE OR EXPLOSION.

For requirements related to ventilation, L.P. Cylinders, and the enclosure, see the ENCLOSURE REQUIREMENTS section.

CYLINDER/CONNECTOR REQUIREMENTS

a. Propane-gas cylinders, valves, and hoses must be maintained in good condition and inspected before each use of appliance. They must be replaced if there is any visible damage. If hose is cut or shows excessive abrasion or wear, it must be replaced before using appliance (see **e**.).

b. This unit, when used with a cylinder, should be connected to a standard 5-gallon (20 lb.) propane-gas cylinder equipped with a listed overfilling prevention device. The device has been required on all cylinders sold since October 1,1998, to prevent overfilling.

c. Cylinder dimensions should be approximately 12" (30.5 cm) in diameter and 18" (45.7 cm) high. Cylinders must be constructed and marked in accordance with the U.S. Department of Transportation (D.O.T.) *Specifications for LP-Gas Cylinders,* or the Standard for *Cylinders, Spheres, and Tubes for Transportation of Dangerous Goods and Commission,* CAN/CSA-B339, as applicable.

d. The cylinder used must include a collar to protect the cylinder valve. The cylinder supply system must be arranged for vapour withdrawal. See Fig. 7-1.

e. When used with a cylinder, the gas supply system must be used with a pressure regulator. The pressure regulator and hose assembly **(not supplied)** used must match the specification for Type I by ANSI Z 21.58/CGA 1.6 and must comply with UL 144 as a part of the self-contained LP gas supply system (see Fig. 7-1).

f. The propane-gas cylinder valve must be equipped with a cylinder connection device, described as Type I in the standard defined in paragraph **e**. above. This device is commonly described as an Acme thread coupler.

g. If the cylinder comes with a dust plug, place it on the cylinder valve outlet whenever the cylinder is not in use. Only install the type of dust cap on the cylinder valve outlet that is provided with the cylinder valve. Other types of caps or plugs may result in leakage of propane.

COUPLER OPERATION

To connect the regulator/hose assembly to the propane-gas cylinder valve fitting: Press the hand nut on the regulator over the Acme thread fitting on the cylinder valve. Turn the hand nut clockwise to engage the threads and tighten until snug. The use of pliers or a wrench should not be necessary. Only cylinders marked “propane” may be used.

To disconnect: Turn the hand nut counterclockwise until detached (Fig. 7-1).

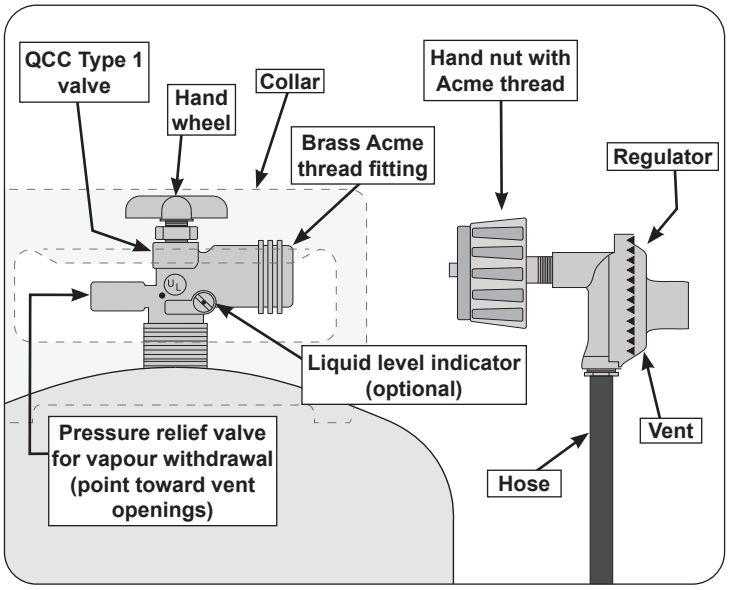

Fig. 7-1 Type I Acme thread coupler

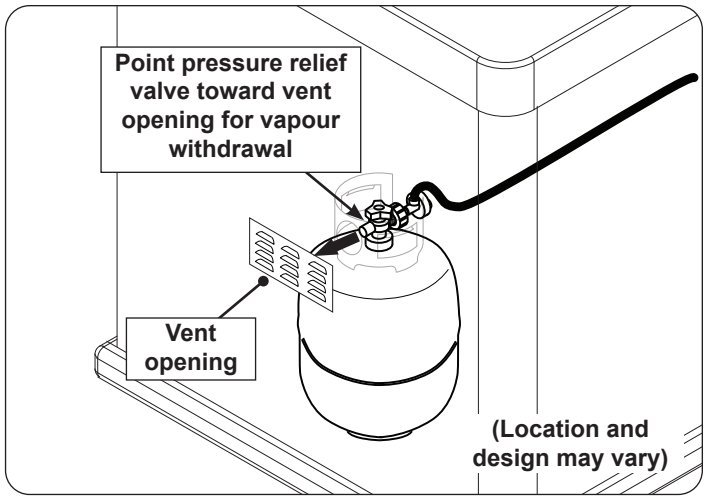

Fig. 7-2 Vapour withdrawal detail

UTILISATION SÛRE ET ENTRETIEN DES CYLINDRES DE GAZ DE PROPANE

IMPORTANT POUR VOTRE SÛRETÉ

LISEZ ET SUIVEZ TOUS LES AVERTISSEMENTS ÉQUIPÉS DE VOTRE CYLINDRE DE GAZ DE PROPANE.

En actionnant cet appareil avec un cylindre de gaz de propane ON DOIT observer ces instructions et avertissements.

LE MANQUE DE FAIRE AINSI PEUT AVOIR COMME CONSÉQUENCE UNE INCENDIE OU UNE EXPLOSION SÉRIEUSE.

Pour les exigences relatives à la ventilation, aux bouteilles de GPL et à l'enceinte, reportez-vous à la section ENCLOSURE REQUIREMENTS.

CYLINDRE ET CONDITIONS ET CARACTÉRISTIQUES DE CONNECTEUR

a. Les bouteilles, les vannes et les tuyaux de propane doivent être entretenus et inspectés avant chaque utilisation. Ils doivent être remplacés en cas de dommages visibles. Si le tuyau est coupé ou présente des signes d'abrasion ou d'usure, il doit être remplacé avant utilisation (**voir e.**).

b. Cette unité, lorsqu'elle est utilisée avec une bouteille, doit être connectée à une bouteille standard de gaz propane de 5 gallons (20 lb) équipée d'un dispositif anti-débordement répertorié. L'appareil est obligatoire sur toutes les bouteilles vendues depuis le 1er octobre 1998 afin d'empêcher tout remplissage excessif.

c. Les dimensions du cylindre doivent être d'environ 12 " (30,5 cm) de diamètre et 18" (45,7 cm) de hauteur. Les bouteilles doivent être construites et marquées conformément aux spécifications du ministère des Transports (DOT) pour les bouteilles à gaz LP ou à la norme relative aux bouteilles, sphères et tubes pour le transport des marchandises dangereuses et à la Commission, CAN / CSA-B339, selon le cas.

d. La bouteille utilisée doit comporter un collier pour protéger le robinet de la bouteille. Le système d'alimentation de la bouteille doit être conçu pour le retrait de la vapeur. Voir Fig. 8-1.

e. Lorsqu'il est utilisé avec une bouteille, le système d'alimentation en gaz doit être utilisé avec un régulateur de pression. Le régulateur de pression et l'ensemble de tuyau **(non fourni)** utilisés doivent correspondre à la spécification de type I par ANSI Z 21.58/CGA 1.6 et doivent être conformes à UL 144 en tant que partie du système d'alimentation en gaz propane autonome (voir Fig. 8-1).

f. La valve de cylindre de gaz de propane doit être équipée d'un dispositif d'accouplement de raccordement de cylindre, décrit comme type I dans la norme définie dans le e. de paragraphe ci-dessus. Ce dispositif est généralement décrit comme coupleur de fil de point culminant.

g. Si la bouteille est livrée avec un bouchon anti-poussière, placez-le sur la sortie du robinet de la bouteille chaque fois que la bouteille n'est pas utilisée. Installez uniquement le type de capuchon anti-poussière sur la sortie du robinet de la bouteille qui est fourni avec le robinet de la bouteille. D'autres types de bouchons ou de bouchons peuvent entraîner des fuites de propane.

OPÉRATION DE COUPLEUR

Pour relier le regulator/hose à l'ajustage de précision de valve de cylindre de gaz de propane: Serrez l'écrou de main sur le régulateur au-dessus de l'ajustage de précision de fil de point culminant sur la valve de cylindre. Tournez l'écrou de main dans le sens des aiguilles d'une montre pour engager les fils et pour serrer jusqu'à ce que douillettement. L'utilisation des pinces ou de la clé ne devrait pas être nécessaire. Seulement le "propane" marqué par cylindres doit être employé.

Pour déconnecter: tournez l'écrou à main dans le sens antihoraire jusqu'à ce qu'il soit détaché (Fig. 8-1)

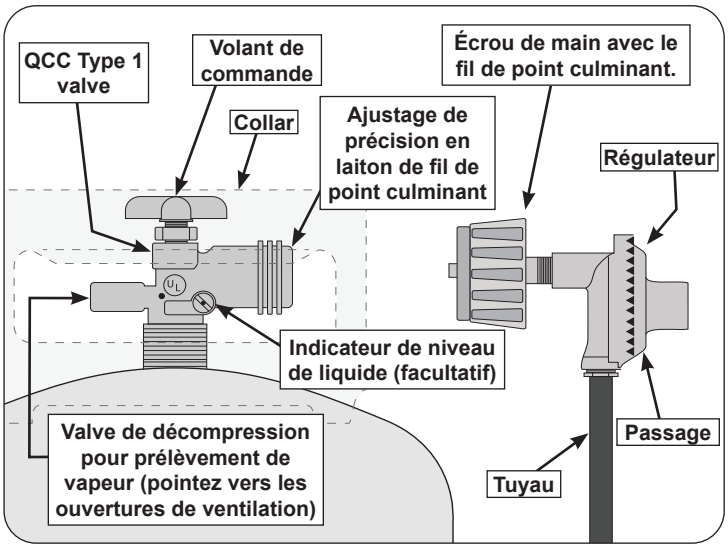

Fig. 8-1 Type coupleur de fil de point culminant d'I

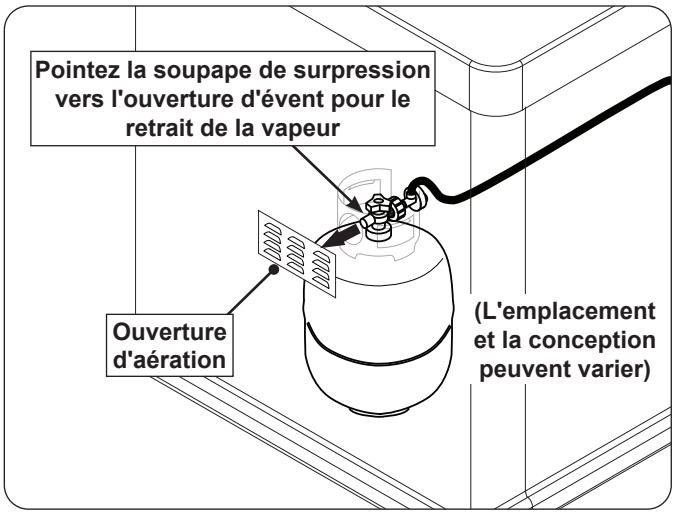

Fig. 8-2 Détail du retrait de vapeur

Important: Before using the unit, and after each time the cylinder is removed and reattached, check the hose for wear (see **a**.) and check all connections for leaks. Turn off the unit valves and open the main cylinder valve, then check connections with soapy water. **NEVER USE A FLAME TO CHECK FOR LEAKS.** Repair any leaks before lighting the unit.

CAUTION: Always turn the propane cylinder main valve off after each use, and before moving the unit and cylinder or disconnecting the coupling. This valve must remain closed and the cylinder disconnected while the appliance is not in use, even though the gas flow is stopped by a safety feature when the coupler is disconnected.

Carefully inspect the hose assembly each time before the gas is turned on. A cracked or frayed hose must be replaced immediately.

If the appliance is stored indoors, the cylinder must be disconnected and removed. Disconnected cylinders must be stored outdoors, out of the reach of children, with threaded valve plugs tightly installed, and must not be stored in a building, garage, or any other enclosed area.

FOR YOUR SAFETY

A. DO NOT store a spare propane-gas cylinder under or near this appliance.

B. NEVER fill the cylinder beyond 80-percent full.

C. IF THE INFORMATION IN **a.** AND **b.** IS NOT FOLLOWED EXACTLY, A FIRE CAUSING DEATH OR SERIOUS INJURY MAY OCCUR.

D. **CGA 791 connections on LP gas cylinders:** The cylinder face elastomeric face seal element (rubber seal) on these devices could, over time, show marked and visible damage or deterioration that might cause a leak even with the connection tightened. A visual inspection for the seal must be carried out every time a LP gas cylinder is replaced or refilled. Any LP gas cylinder showing signs of damage or deterioration as illustrated in Fig. 9-1, including visible cracks and pitting, must be replaced.

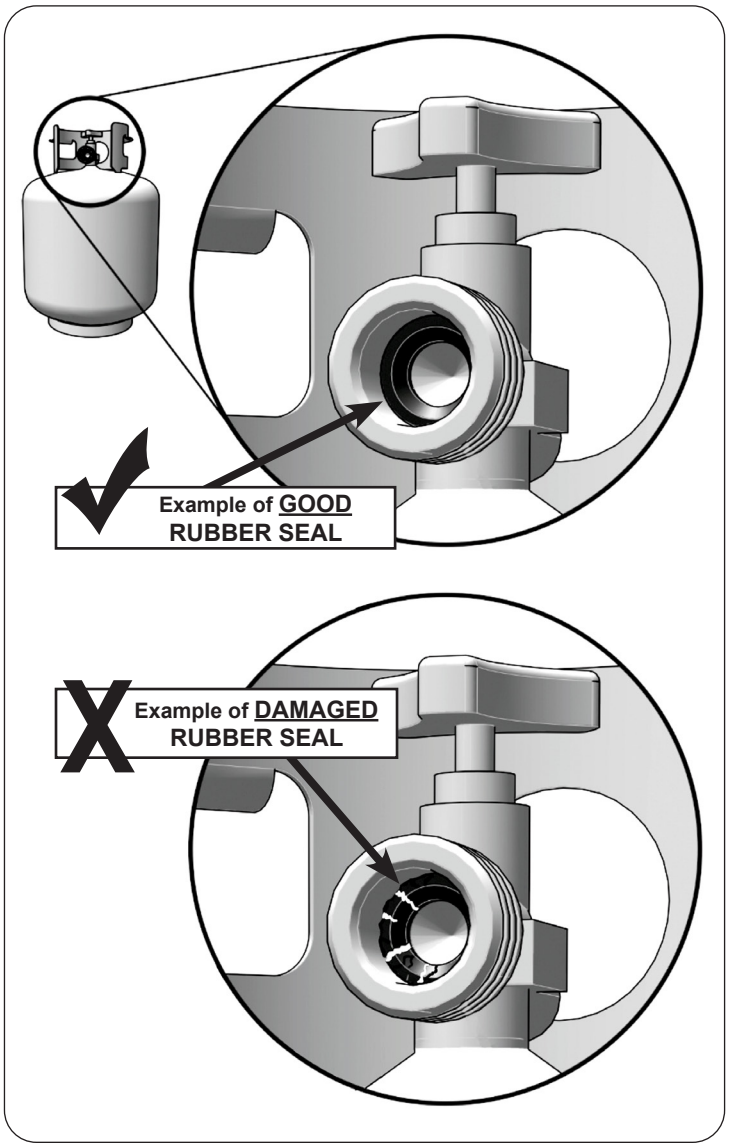

Fig. 9-1 Inspect rubber seal

Important: Avant d'employer le unité, et ensuite chaque fois que le cylindre est enlevé et rattaché, examinez tous les raccordements pour déceler les fuites. Arrêtez les valves de unité et ouvrez la valve principale de cylindre, puis vérifiez les raccordements avec de l'eau savonneux. **NE JAMAIS UTILISER UNE FLAMME POUR DÉTECTER DES FUITES.** Réparez toutes les fuites avant d'allumer le unité.

ATTENTION: Tournez toujours la valve principale de cylindre de propane au loin après chaque utilisation, et avant de déplacer le unité et le cylindre, ou débrancher l'accouplement. Cette valve doit rester fermée et le cylindre a débranché alors que l'appareil n'est pas en service, quoique l'écoulement de gaz soit arrêté par un dispositif de sûreté quand le coupleur est débranché.

Inspectez soigneusement l'ensemble de tuyau chaque fois avant que le gaz soit allumé. Un tuyau fissuré ou effiloché doit être immédiatement remplacé.

Si l'appareil est stocké à l'intérieur, le cylindre doit être disconnected et a enlevé. Des cylindres Disconnected doivent être stockés dehors, hors de la portée des enfants, avec les prises de valve filetées étroitement installées, et ne doivent pas être stockés dans un bâtiment, le garage, ou n'importe quel autre secteur inclus.

POUR VOTRE SÛRETÉ

a. Ne stockez pas un cylindre de gaz disponible de propane dessous ou ne vous approchez pas de cet appareil.

b. Ne remplissez jamais cylindre au delà de 80 pour cent de plein.

c. SI L'INFORMATION DANS "A" ET "B" N'EST PAS SUIVIE EXACTEMENT, UN FEU CAUSANT LA MORT OU DES DOMMAGES SÉRIEUX PEUT SE PRODUIRE.

d. **Connexions CGA 791 sur les bouteilles de GPL :** L'élément d'étanchéité en caoutchouc du joint d'étanchéité de la face élastomère du cylindre sur ces appareils pourrait, avec le temps, présenter des dommages marqués et visibles ou une détérioration qui pourrait causer une fuite même avec la connexion serrée. Une inspection visuelle du joint doit être effectuée chaque fois qu'une bouteille de GPL est remplacée ou remplie. Toute bouteille de GPL présentant des signes de dommages ou de détérioration, tel qu'illustré à la Fig. 10-1, y compris des fissures et des piqûres visibles, doit être remplacée.

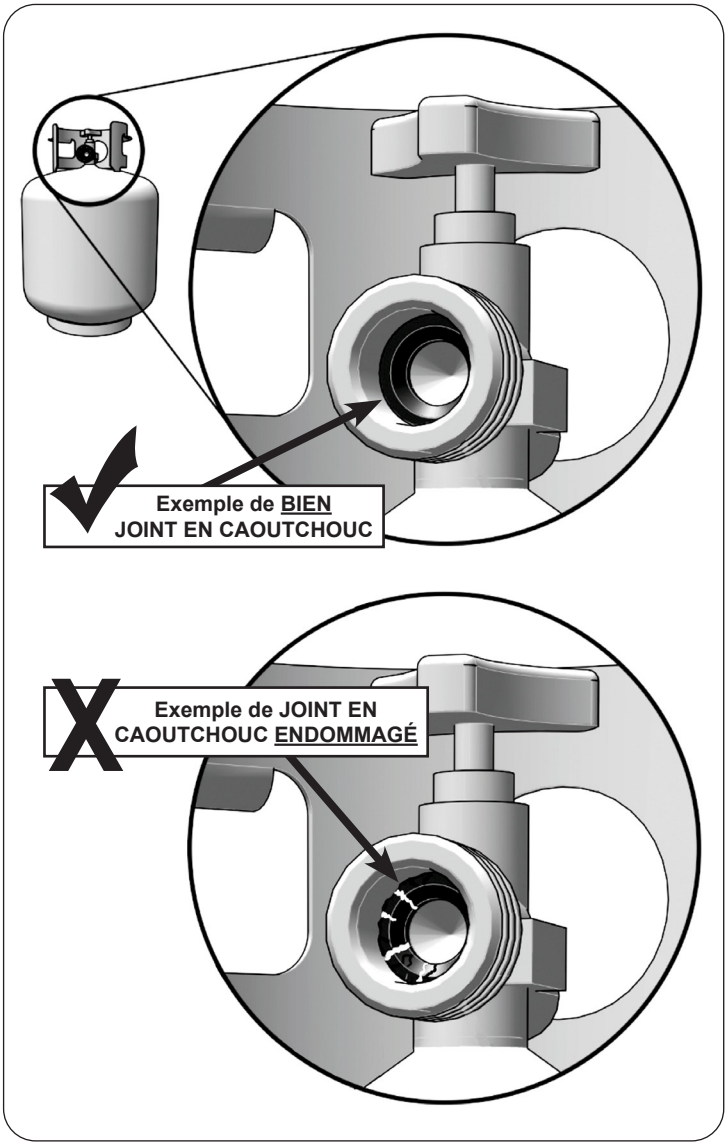

Fig. 10-1 Inspecter le joint en caoutchouc

ENCLOSURE REQUIREMENTS

GFRC islands are available. They meet all enclosure and ventilation requirements. Contact your local dealer. For requirements regarding custom-built enclosures, see below.

To ensure proper operation and safety, the enclosure MUST comply with the following:

- Proper construction and cutout openings - see INSTALLATION REQUIREMENTS and ENCLOSURE PARAMETERS sections.
- Proper ventilation - see VENTILATION section.
- Proper clearances - see INSTALLATION REQUIREMENTS section.

You MUST read and follow these sections for complete enclosure requirement details.

ENCLOSURE PARAMETERS

General Guidelines

The enclosure can be constructed according to your individual preference, while following all guidelines found in this manual. **The enclosure MUST (see Fig. 11-1):**

- be installed on a hard and level surface
- be properly vented (see VENTILATION section)
- have a countertop that is non-combustible (enclosure may be combustible construction with proper provision*)
- have the minimum dimensions specified in Fig. 11-1
- have the minimum cutout dimensions (see CUTOUT DIMENSIONS section)
- be setup so that the power supply is within reach of a properly wired and inspected **120VAC (15 AMP minimum) Ground Fault Circuit Interrupter (GFCI) GROUNDED three-wire receptacle**
- have access to the interior for ease of installation and service
- be setup so the unit is as close to the vent openings as possible
- be designed so that the pizza oven is supported by the stainless-steel hanger extending from the upper portion of the unit (rests on left, right, and back of the countertop cutout), and the two front support adjustment bolts located below the control panel (left and right sides) - see INSTALLATION section
- have drainage cutouts (if needed) to prevent the accumulation of water within the enclosure
- meet all requirements found in Fig. 11-1 and the following sections

*** When installing this unit in a combustible enclosure, an approved insulating liner MUST be used. Reference Table 3 in the MODEL SPECIFICATIONS section for liner model #.**

When an L.P. cylinder is used in the enclosure, additional requirements exist, see the L.P. CYLINDER REQUIREMENTS section.

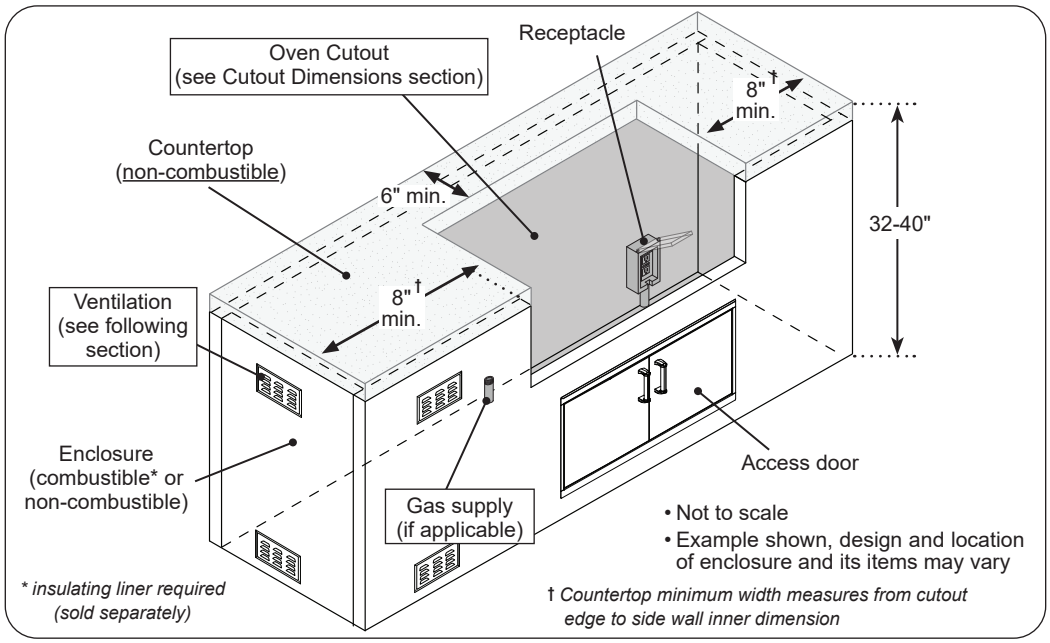

Fig. 11-1 Enclosure specifications

Ventilation

FOR YOUR SAFETY, you must provide the openings specific to your gas type for replacement air and ventilation of the enclosure (in case of possible leakage from gas connections and L.P. cylinders as applicable, and for heat dissipation). See the following sections for ventilation requirements specific to your gas type. Failure to provide proper ventilation for your gas type may result in a fire or explosion causing property damage, bodily injury, or death.

WARNING: Vent openings in side walls shall not communicate directly with other enclosures of the outdoor cooking gas appliance (see Fig. 12-1).

- **Ventilation openings shall not be located in front of the appliance above floor level.**
- **Every opening shall have a minimum dimension so as to permit the entrance of a 3/16" (4.8 mm) rod.**
- **The openings must remain unobstructed:**

  The clearance between the openings and any items outside of the enclosure is a minimum of 6". The clearance between the openings and any items within the enclosure is a minimum of 2". See Fig. 12-2.

KEEP THE REQUIRED VENT OPENINGS AND SURROUNDING AREA OF THE ENCLOSURE CLEAR AND FREE AT ALL TIMES.

Natural Gas Ventilation Requirements

When natural gas is used in the enclosure, the guidelines below MUST be followed:

One side of the enclosure shall be left completely open to the outside; OR 1 minimum vent opening (at top level) or 2 vent openings (1 at top and 1 at floor level) MUST be created (reference Fig. 12-3):

- **When using only 1 vent opening: the opening must be at top level and must have a minimum of 20 sq. in. of free area.**
- **When using 2 vent openings: The top and floor level openings must have a minimum of 10 sq. in. of free area each. The openings must be equally sized (ventilation total of 20 sq. in. free area).**
- The opening **at the top level** must begin 1" or less below the countertop level and end no more than 5" below the countertop level.
- If applicable, the opening **at the floor level** must begin 1" or less above the floor level and end no more than 5" above the floor level.
- If planning for 2 vent openings, it is acceptable to use RHP venting panels (PN 5510-01). Contact your dealer.

Note: These same requirements apply when multiple appliances exist in the enclosure.

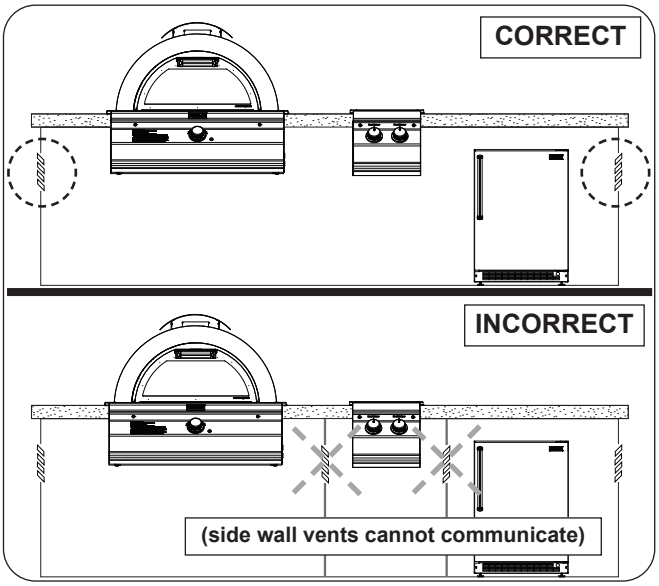

Fig. 12-1 Correct / Incorrect side wall venting

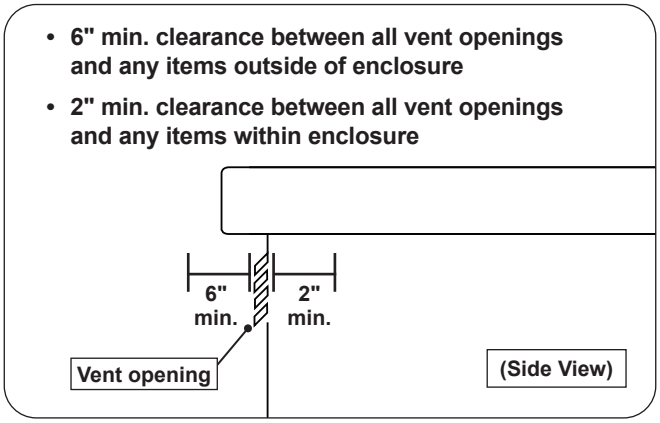

Fig. 12-2 Vent openings clearance

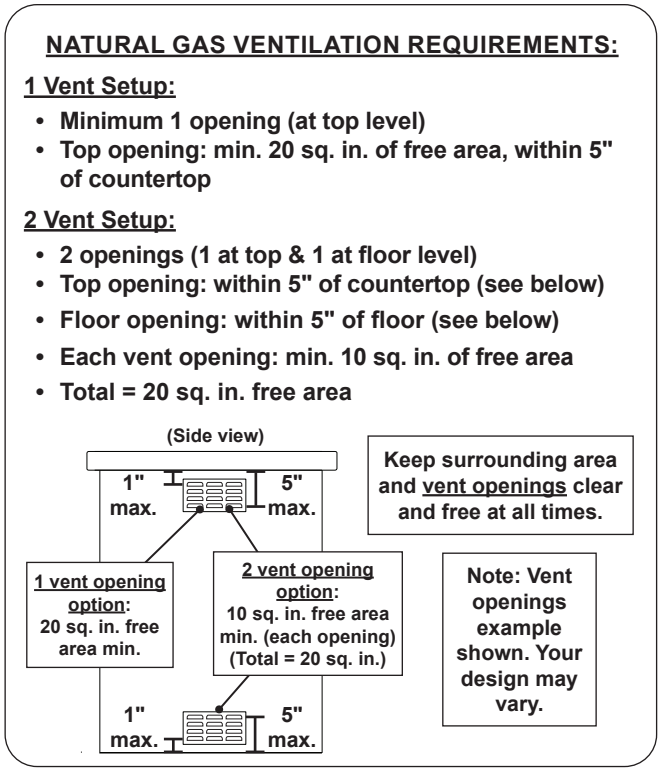

Fig. 12-3 Natural gas ventilation detail

L.P. Cylinder Ventilation Requirements

When an L.P. cylinder is used in the enclosure, the guidelines below MUST be followed:

One side of the enclosure shall be left completely open to the outside; OR 4 minimum vent openings (2 at top and 2 at floor level) MUST be created (reference Fig. 13-1):

- **Each opening at the top level must have a minimum of 10 sq. in. of free area. The openings must be equally sized.**
- **Each opening at the floor level must have a minimum of 5 sq. in. of free area. The openings must be equally sized.**
- **Ventilation total of 30 sq. in. free area**
- Each opening **at the top level** must be on adjacent walls of the enclosure, and spaced at a minimum of 90 degrees. The openings must begin 1" or less below the countertop level and end no more than 5" below the countertop level.
- Each opening **at the floor level** must be on adjacent walls of the enclosure, and spaced at a minimum of 90 degrees. The openings must begin 1" or less above the floor level and end no more than 5" above the floor level.
- The above outlined is the minimum ventilation requirement for each L.P. cylinder used within the enclosure.
- For L.P. cylinders larger than 20 lb capacity, there must be a minimum of **1 in²/lb of open area for top vent openings** and a minimum of **1/2 in²/lb of open area for bottom vent openings.**

Note: These same requirements apply for each individual L.P. cylinder being used within the enclosure.

- **Additional requirements exist for L.P. cylinders, see the L.P. CYLINDER REQUIREMENTS section.**

L.P. CYLINDER VENTILATION REQUIREMENTS:

- **Minimum 4 openings (2 at top & 2 at floor level)**
- **2 per adjacent wall - spaced at min. 90 degrees**
- **Top openings: min. 10 sq. in. of free area each, within 5" of countertop (20 sq. in. top ventilation)**
- **Floor openings: min. 5 sq. in. of free area each, within 5" of floor (10 sq. in. floor ventilation)**
- **Total = 30 sq. in. free area**

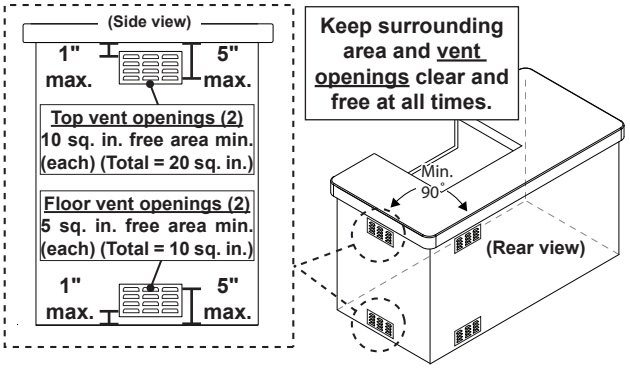

Note: Vent openings example shown. Your design may vary.

Fig. 13-1 L.P. cylinder ventilation detail

Remote L.P. Ventilation Requirements

When a remote L.P. gas system is used with the enclosure, the guidelines below MUST be followed:

One side of the enclosure shall be left completely open to the outside; OR 4 minimum vent openings (2 at top and 2 at floor level) MUST be created (reference Fig. 13-2):

- **Each opening must have a minimum of 45 sq. in. of free area. The openings must be equally sized.**
- **Ventilation total of 180 sq. in. free area**
- Each opening **at the top level** must be on adjacent side walls of the enclosure, and spaced at a minimum of 90 degrees. The openings must begin 1" or less below the countertop level and end no more than 5" below the countertop level.
- Each opening **at the floor level** must be on adjacent walls of the enclosure, and spaced at a minimum of 90 degrees. The openings must begin 1" or less above the floor level and end no more than 5" above the floor level.

Note: These same requirements apply when multiple appliances exist in the enclosure.

REMOTE LP VENTILATION REQUIREMENTS:

- **Minimum 4 openings (2 at top & 2 at floor level)**
- **2 per adjacent wall - spaced at min. 90 degrees**
- **Top openings: within 5" of countertop (see below)**
- **Floor openings: within 5" of floor (see below)**
- **Each vent opening: min. 45 sq. in. of free area**
- **Total = 180 sq. in. free area**

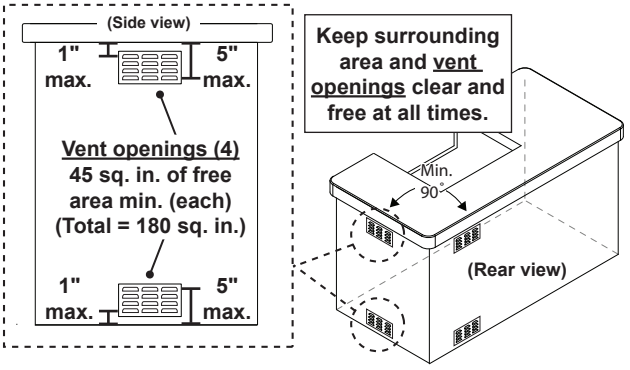

Note: Vent openings example shown. Your design may vary.

Fig. 13-2 Remote LP ventilation detail

L.P. Cylinder Requirements (if applicable)

When a propane (L.P.) cylinder is installed inside of the enclosure, the additional guidelines below **MUST** be followed. FAILURE TO DO SO MAY CAUSE DAMAGE TO YOUR UNIT AND/OR PERSONAL INJURY. Refer to Fig. 14-1 and 14-2.

- Only a C.S.A. listed stainless-steel flex connector must be connected to the unit.
- The regulator/hose assembly coming from the cylinder must only be connected to the above mentioned flex connector. A 1/2" male-to-male flare adapter will be required (not included). **DO NOT connect the regulator/hose assembly directly to the unit.**
- A non-combustible heat shield must be installed to protect the regulator/hose assembly and cylinder valve.
- The cylinder must be properly secured, and rest at least 2" above the ground.
- An additional vent opening is recommended in the access door near the cylinder and at the gas connection level (minimum 10 sq. in. of free area).
- The pressure relief valve on the cylinder must be pointed toward the vent opening for vapour withdrawal.

An "access door with tank tray and louvers" is available. It includes a heat shield that rests directly above the L.P. cylinder, a tray, a retention device, and louvers to meet the cylinder install requirements. The door is shown in Fig. 14-3. Contact your dealer for ordering information.

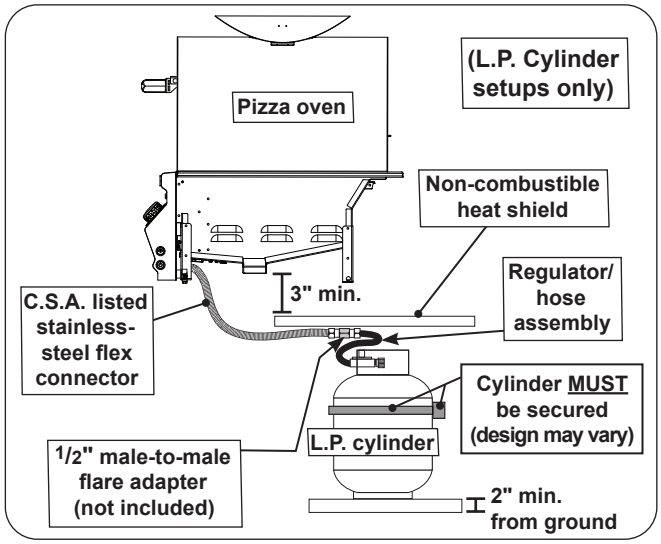

Fig. 14-1 L.P cylinder orientation

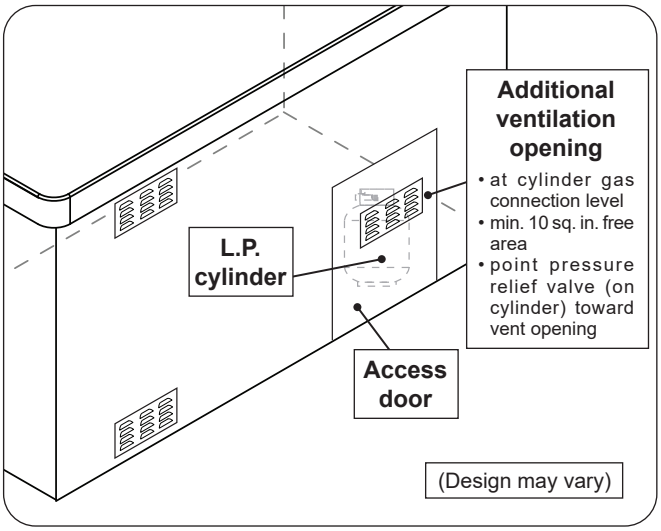

Fig. 14-2 Additional vent opening for L.P. cylinder

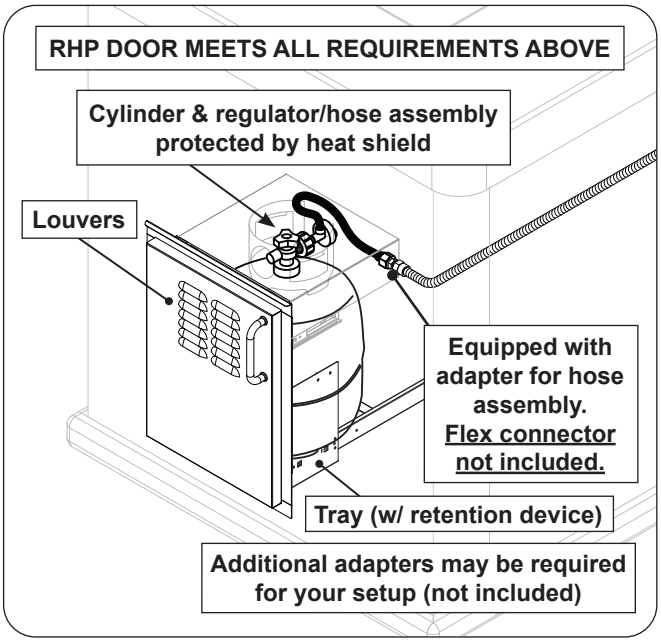

Fig. 14-3 Optional door w/ tank tray & louvers

Cutout Dimensions

Important: These cutout dimensions below are for non-combustible enclosures. If installing this unit in a combustible enclosure, the correct insulating liner must be used (and the cutout dimensions will differ). See Table 3. Refer to the instructions supplied with the liner for the correct cutout dimensions.

Description (non-combustible cutouts)	4600(P)
A Countertop to unit bottom **cutout**	11 1/2"
B Side to side **cutout**	31 1/4"
C Front to back **cutout** *	23 1/2"
D Control panel width †	33"

* Includes any substrate at front wall of enclosure (in the area the rear of the control panel is to sit flush against). See SUBSTRATE section on next page.

† Only applicable for non-combustible enclosures that have countertops with an overhang (see illustration and section below).

Table 1 - Cutout Dimensions (for non-combustible enclosures)

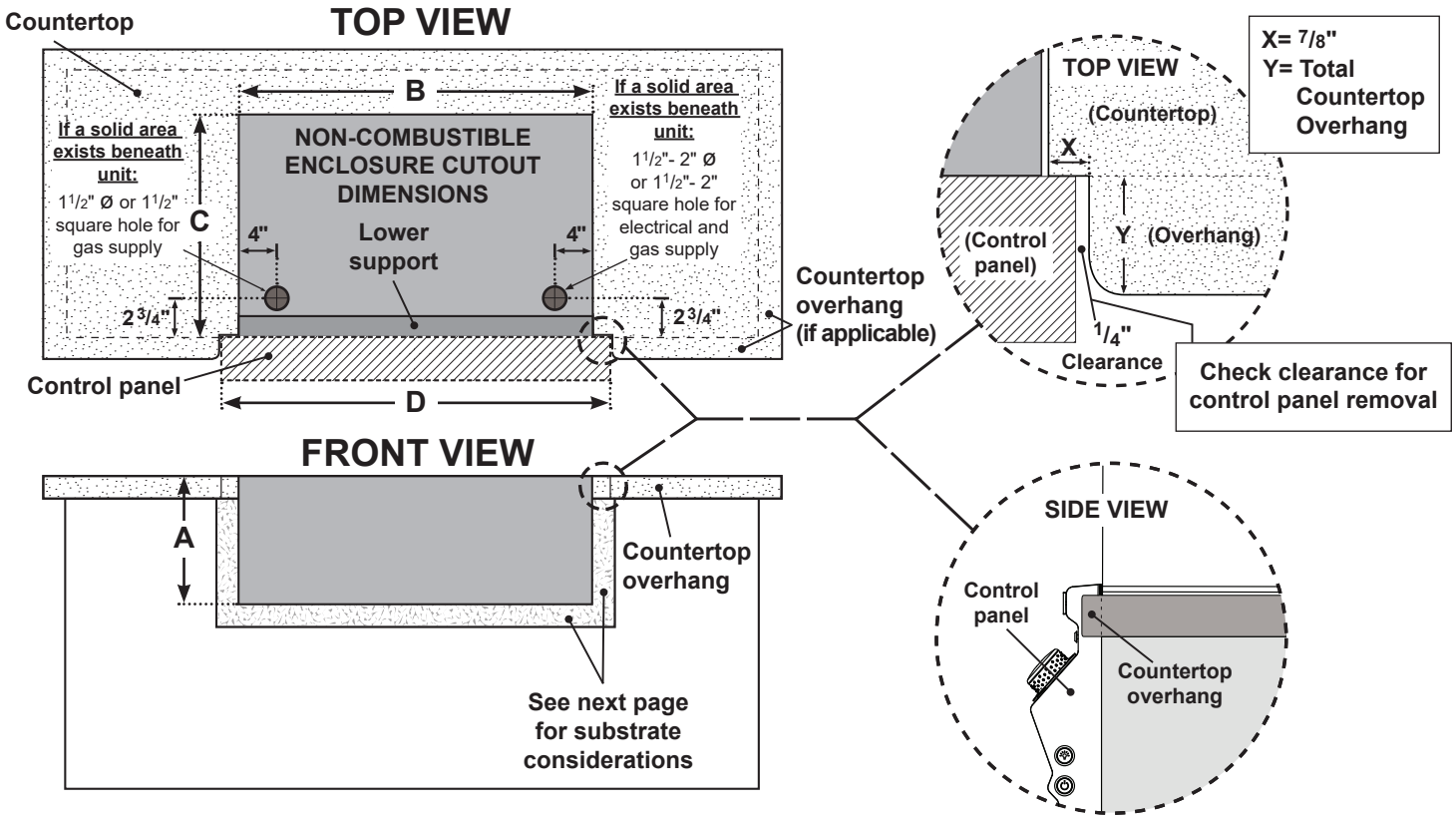

Fig. 15-1 Cutout Dimensions Detail

Countertop Overhang

The control panel is designed to sit flush against the enclosure front wall. If the countertop extends beyond the front wall, creating a countertop overhang, it must be cut flush with the front wall for the width of the control panel or a gap will be created exposing the forward portions of the left and right side pizza oven fire walls. See illustrations in Fig. 15-1 above for the correct setup, and Fig. 15-2 for an incorrect setup.

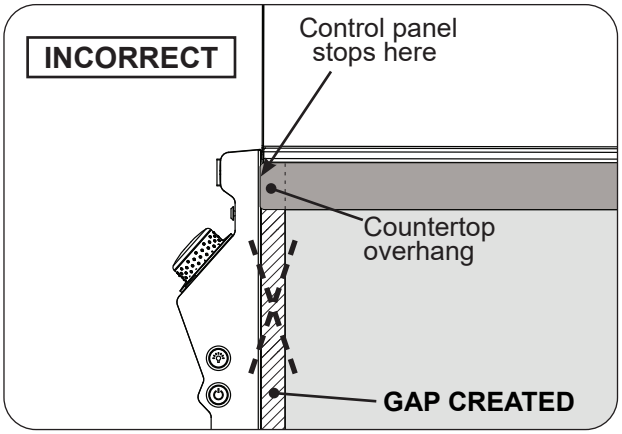

Fig. 15-2

Substrate

When adding any substrate to the enclosure front wall (including tiles, stone, etc.), consider the following:

Substrate Behind Control Panel

Substrate + countertop "front to back" cutout must equate to **Dim. C** (see previous page) when the substrate sits flush behind the control panel.

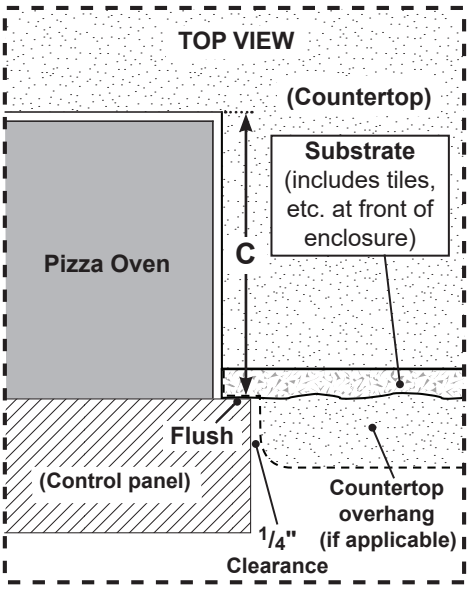

Fig. 16-1

Substrate Alongside Control Panel

Any additional substrate alongside the control panel does not need to be considered in **Dim. C** (see previous page), however a 1/4" clearance on each side (same as overhang) and below is required.

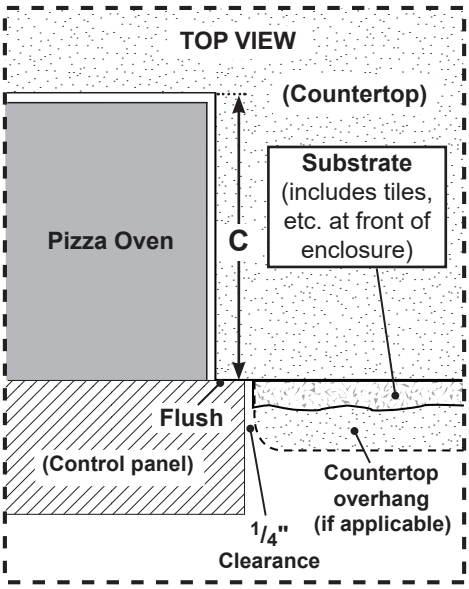

Fig. 16-2

Installation must be performed by a qualified professional service technician.

This unit is designed for outdoor use only. **DO NOT** use this unit inside a building, garage, or enclosed area. **DO NOT** install this unit in or on a recreational vehicle or boat.

Any constructed outdoor area in which the appliance is used shall comply with one of the following:

- An outdoor area with walls on three sides, and no overhead cover
- Within a partial outdoor area that includes an overhead cover and no more than two walls. The sidewalls may be parallel, as in a breezeway, or at right angles to each other
- Within a partial outdoor area that includes an overhead cover with walls on three sides, and at least 30% or more of the horizontal periphery of the enclosure that is open and unrestricted

Note: All openings must be permanently open.

Note: Sliding doors, garage doors, windows, or screened openings are not considered as permanent openings.

Refer to DIAGRAMMATICAL REPRESENTATIONS OF OUTDOOR AREAS section.

EXHAUST HOOD

Important: **DO NOT use this appliance under combustible overhead construction.**

When installed under overhead non-combustible construction, an exhaust hood is highly recommended; see exhaust hood information below and Fig. 17-1.

When using an exhaust hood, the area above the pizza oven must be covered with a hood larger than the footprint of the pizza oven, and with a minimum of 1200 CFM (cubic feet per minute) rated exhaust fan for proper outdoor application.

Fire Magic vent hoods, spacers, and duct covers are available. See Table 3. Contact your local dealer.

- For custom spacers, they **must be constructed entirely of non-combustible material only.**
- For custom soffits, they may be constructed of wood, metal framing, etc.

Clearances

A minimum 5 foot clearance is required between the countertop and the overhead construction. (No combustible materials are allowed within this area.)

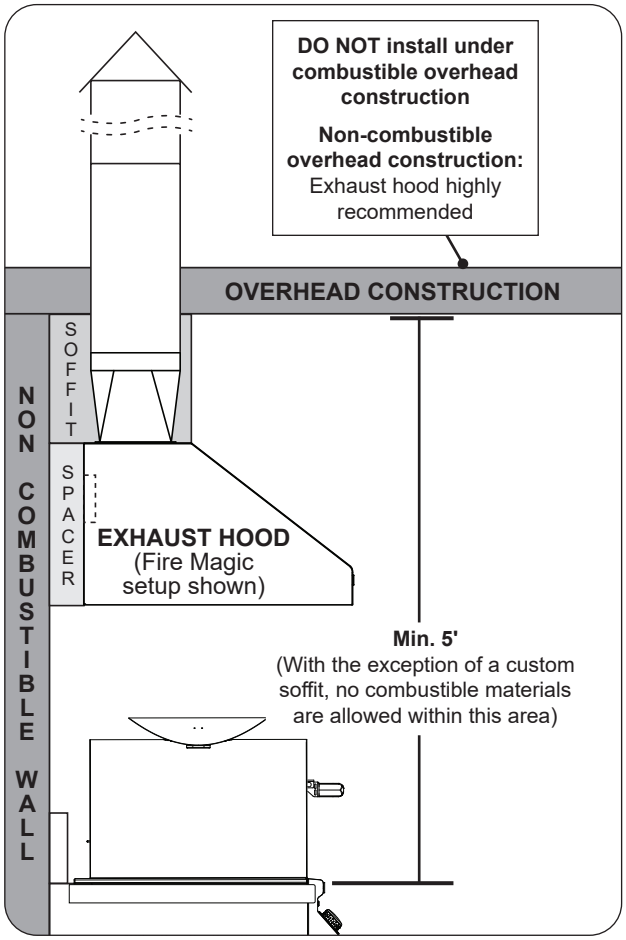

Fig. 17-1 Overhead requirements

REAR WALL CLEARANCES

For the minimum clearances between the unit and rear walls, your setup must fall within one (or more) of the following:

A. Clearance between unit and strictly non-combustible rear wall

(i.e. brick wall, see Fig. 18-1)

- The unit must have a minimum clearance of 4" from the non-combustible rear wall.

  (To allow for proper ventilation and prevent dangerous overheating.)

B. Clearance between unit and a protected combustible rear wall

(i.e. a non-combustible wall in front of a combustible wall to serve as a barrier. This can be accomplished by brick, or a metal stud finished with non-combustible substrate, see Fig. 18-2)

- The unit must have a minimum clearance of 6" from the protected combustible rear wall.

  (The 4" non-combustible material plus an additional 2" clearance between the unit and protected rear wall.)

C. Clearance between unit and combustible rear wall

- The unit must have a minimum clearance of 9" from the combustible rear wall (see Fig. 18-3).

BACKSPLASH CLEARANCE (if applicable)

If a non-combustible backsplash exists, it must have a minimum of a 4" clearance from the rear of the unit (to allow for proper ventilation). See Fig. 18-4.

Important: This 4" backsplash clearance must first be met prior to any non-combustible walls beginning behind it.

SIDE / CORNER WALL CLEARANCES (if applicable)

The unit must have a minimum clearance of 12" from any side walls (to account for variables in airflow that could affect performance). See Fig. 18-5.

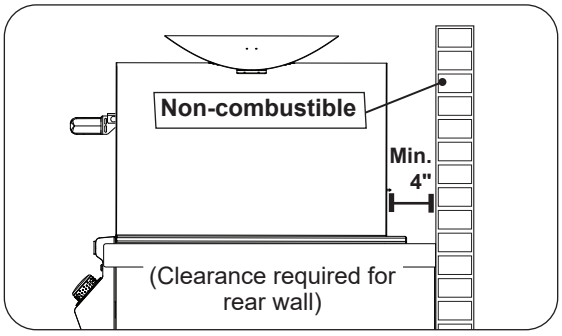

Fig. 18-1 Clearance **'A'** Diagram

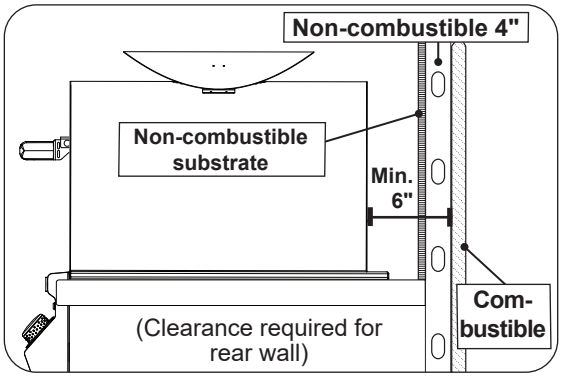

Fig. 18-2 Clearance **'B'** Diagram

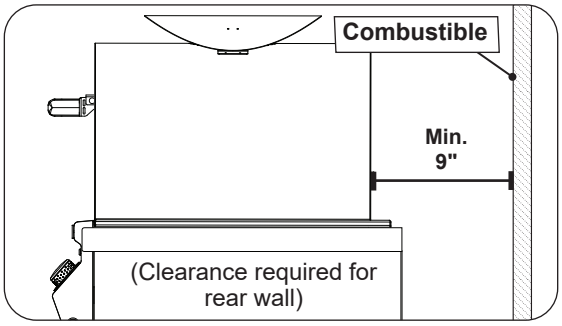

Fig. 18-3 Clearance **'C'** Diagram

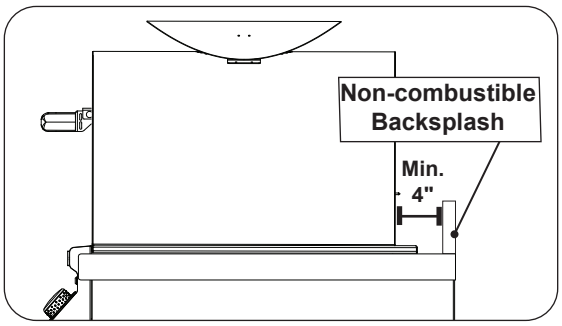

Fig. 18-4 Backsplash clearance

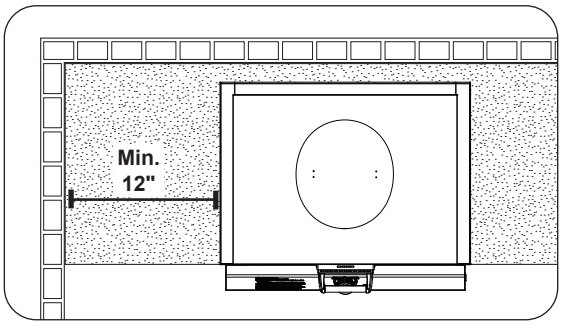

Fig. 18-5 Side/corner wall clearance

CONTROL PANEL CLEARANCES

- The control panel **MUST** have a minimum side clearance of 6" from any obstructions/side walls. See Fig. 19-1.

  (To allow for access to side switches and control panel removal.)
- The control panel **MUST** remain removable for servicing (see CONTROL PANEL REMOVAL section). Any adjacent countertops must not obstruct the panel from being removed.

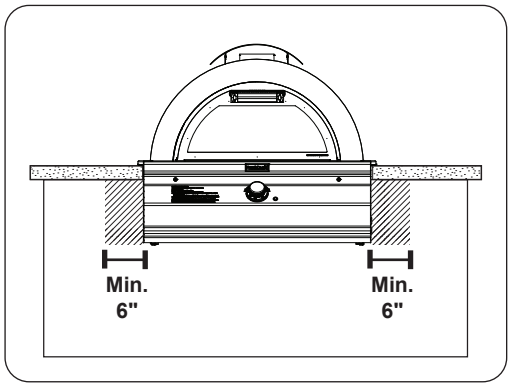

Fig. 19-1 Control panel clearances

COMBUSTION AIR AND COOLING AIRFLOW

Proper airflow (front-to-back, Fig. 19-2) MUST be maintained for the unit to perform as it was designed. If airflow is blocked, overheating and poor combustion will result. Do not block the front air inlet along the bottom of the control panel.

CAUTION: Wind blowing into or across the oven exhaust (Fig. 19-4) can cause poor performance and/or dangerous overheating. Install the pizza oven so that the prevailing wind blows toward the front of the pizza oven (Fig. 19-3). A wind deflector is equipped to assist in proper airflow during windy conditions. See Fig. 19-2. **THE WIND DEFLECTOR WILL GET HOT WHEN THE UNIT IS ON.**

Note: The wind deflector can remain in the level position when used under normal conditions.

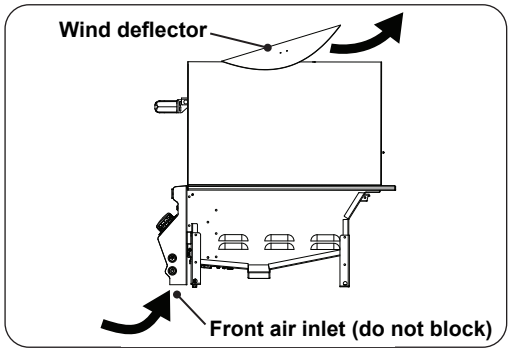

Fig. 19-2 Airflow diagram

GAS-SUPPLY PLUMBING REQUIREMENTS

The gas supply is to be routed into the enclosure, near the unit. Your individual installation may vary. **Observe the National Fuel Gas Code and all local codes. Leak test at all connections.**

The gas supply must be sized to provide minimum inlet pressure at the maximum flow rate (BTU/hr). Undue pressure loss will occur if the pipe is too small, or the run is too long. Gas supply pipe must be ½" minimum interior diameter. If the gas line is longer than 20', a larger diameter line may be necessary. Refer to the NFPA 54 guidelines for further details.

DO NOT use a rubber hose within the enclosure.

A C.S.A. approved stainless steel flex connector is included and pre-installed to the pizza oven, and routes to the gas supply. A flare-to-NPT adapter is provided for 1/2" pipe. The use of any rigid pipe, semi-rigid tubing, and connectors must comply with the Standard for *Connectors for Outdoor Gas Appliances and Manufactured Homes,* ANSI Z21. 75 (CSA 6.27).

Use a pipe joint compound resistant to all gasses on all NPT pipe fittings. Make sure to tighten every fitting securely. **Do not use pipe joint compound to connect flare fittings.**

Important: A shut-off valve (not included) in the gas supply line is required. It must be installed within 6 feet of the unit and must be easily accessible. Use a pipe joint compound resistant to all gasses on all NPT pipe fittings **except flare fittings**. Refer to NFPA 54 guidelines for further details.

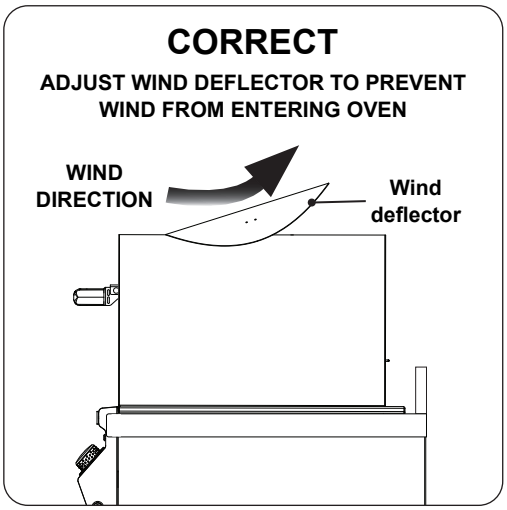

Fig. 19-3 Airflow direction - CORRECT

GAS SUPPLY INLET PRESSURES:

For **natural gas** - normal 7" water column (w.c.), minimum 5", maximum 10 1/2". For **propane gas** - normal 11" w.c., minimum 10", maximum 13".

Note: An additional regulator may be needed to meet these requirements.

Note: A sediment trap in the gas supply line is recommended where applicable. It should be installed downstream of the shut-off valve as close to the unit as possible. Refer to NFPA 54 guidelines for further details.

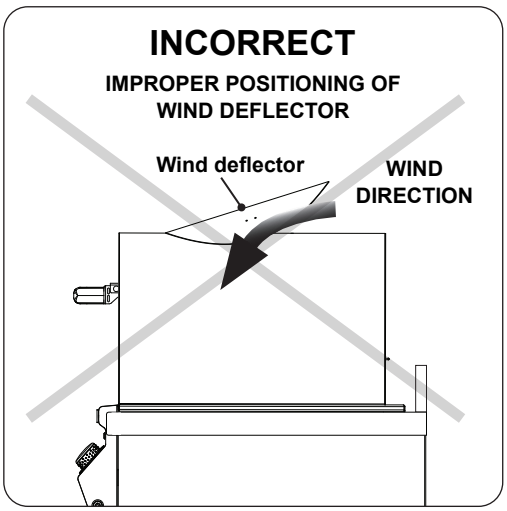

Fig. 19-4 Airflow direction - INCORRECT

DIAGRAMMATICAL REPRESENTATIONS OF OUTDOOR AREAS

The following figures are diagrammatical representations of outdoor areas, as defined in Clause 4.25.3. See INSTALLATION REQUIREMENTS section.

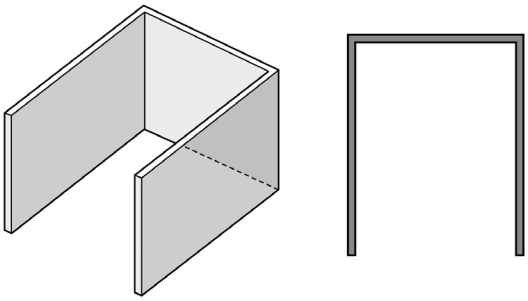

Fig. 20-1 Outdoor area - Example 1

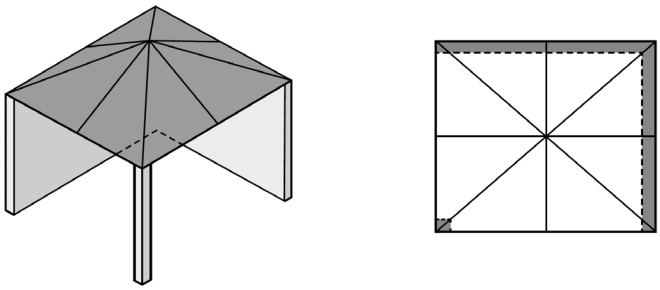

Fig. 20-2 Outdoor area - Example 2

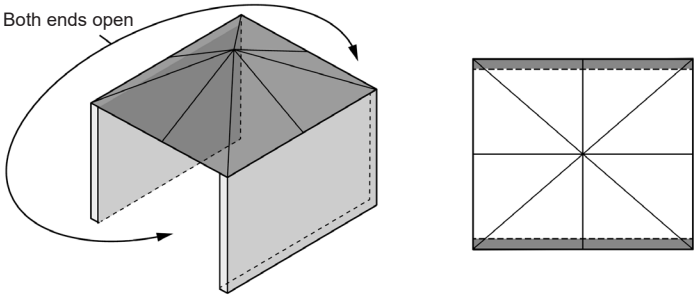

Fig. 20-3 Outdoor area - Example 3

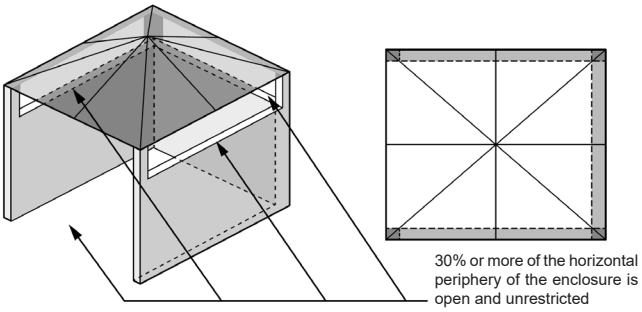

Fig. 20-4 Outdoor area - Example 4

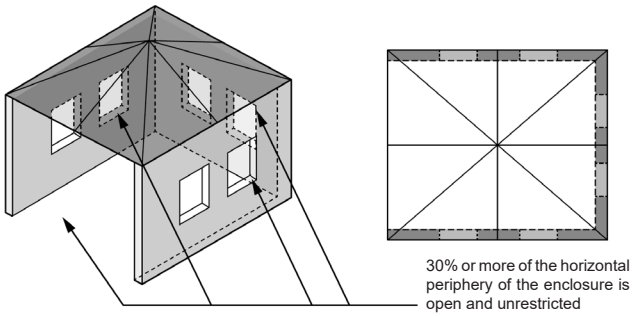

Fig. 20-5 Outdoor area - Example 5

ELECTRICAL SAFETY

- To protect against electric shock, do not immerse cord or plugs in water or other liquid.
- Unplug from the outlet when not in use and before cleaning. Allow to cool before putting on or taking off parts.
- Do not operate any outdoor cooking gas appliance with a damaged cord or plug, or after the appliance malfunctions or has been damaged in any manner. Contact the manufacturer for repair.
- Do not let the cord hang over the edge of a table or touch hot surfaces.
- Do not use an outdoor cooking gas appliance for purposes other than intended.
- When connecting, first connect plug to the outdoor cooking gas appliance then plug appliance into the outlet.
- **Use only a properly wired and inspected 120VAC (15 AMP minimum) Ground Fault Circuit Interrupter (GFCI) GROUNDED three-wire receptacle with this outdoor cooking gas appliance.**
- The GFCI receptacle must be a WEATHER-PROOF IN-USE COVERED RECEPTACLE.
- Never remove the grounding plug or use with an adapter of two prongs.
- Use only extension cords with a three-prong grounding plug, rated for the power of the equipment, and approved for outdoor use with a W-A marking.
- **The provisions of the National Electric Code as well as any local codes must be observed when installing the product.**

4600 (P)	Quantity	Orifice		Air shutter *	
		Natural gas drill size	Propane gas drill size	Natural gas opening size	Propane gas opening size
Burner	2	#48	#56	1/8"	1/8"
Pilot	1	#75	#79	N/A	N/A
Input electrical requirements	**120~240 VAC / 1.90A max. / 50/60 Hz / GFCI outlet**				
Appliance rating	13 VDC / 156 Watts				
Interior oven light rating	**12V / 10 watt** halogen light bulb				

* These are air shutter factory settings. These settings may require adjustment due to gas conversion, altitude, or other local conditions. See AIR SHUTTER ADJUSTMENT / BURNER FLAME INSPECTION section.

Table 2 - Product Specifications

Description		Model #
Aurora insulating liner model # *		3176-52
Gas conversion kit model # * †	Propane to natural gas	25386-24
	Natural to propane gas	25386-24P
Battery pack *		5660-01
Vent hood model # * ‡		42-VH-7
Vent hood spacer model # * ‡		42-VH-7-02
Vent hood duct cover model # * ‡		42-VH-7-DC

* If applicable, not included

† If installing this unit in a combustible enclosure, the correct insulating liner must be used. Consult liner instructions for counter cutout dimensions and installation.

‡ This model meets the minimum requirements. Larger models are also acceptable.

Table 3 - Pizza Oven Supporting Products

Model	Pizza Oven				
	Height	Width		Depth	
	(Top to bottom)	(Left to right)		(Front to back)	
	Bottom of hanger to top (with wind deflector at maximum tilt) **(A)**	Maximum width **(B)**	Control panel width **(C)**	Maximum depth (with door closed) **(D)**	Maximum depth (with door open) **(E)**
4600(P)	19 1/2"	34 1/8"	32 1/2"	29"	35"

Table 4 - Pizza Oven Dimensions

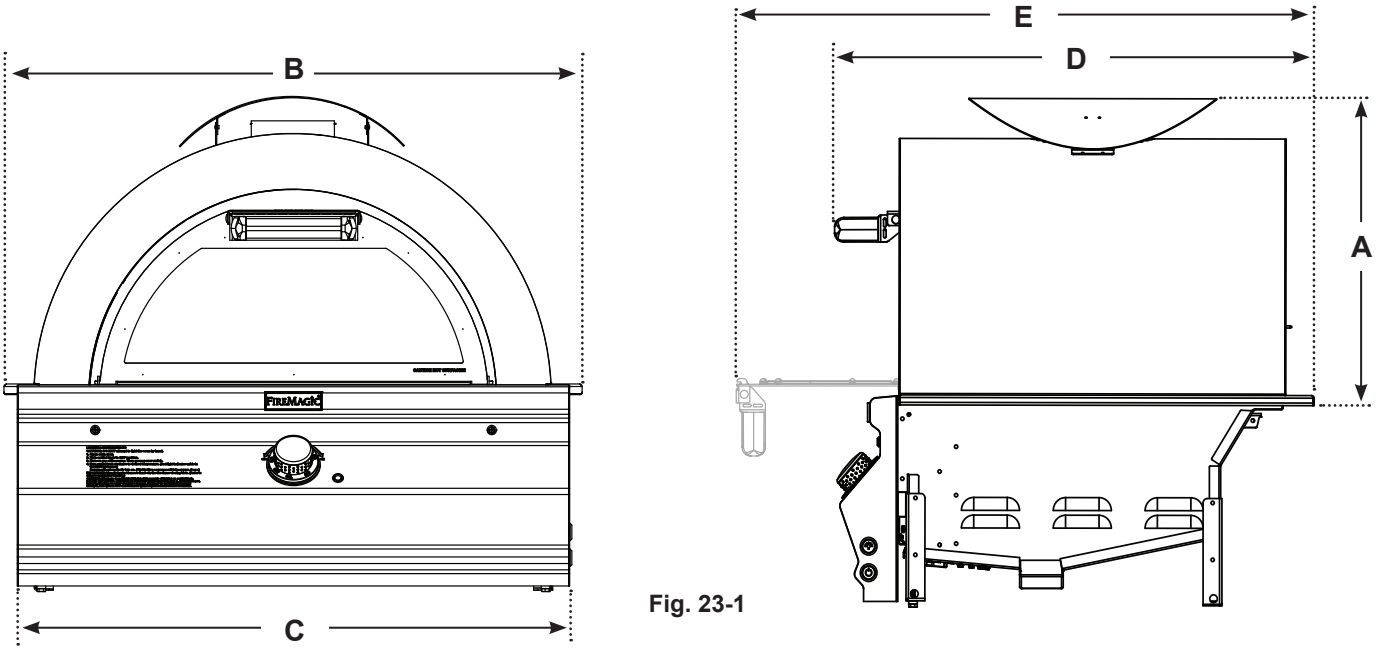

Fig. 23-1

BUILT-IN PIZZA OVEN WIRING DIAGRAM

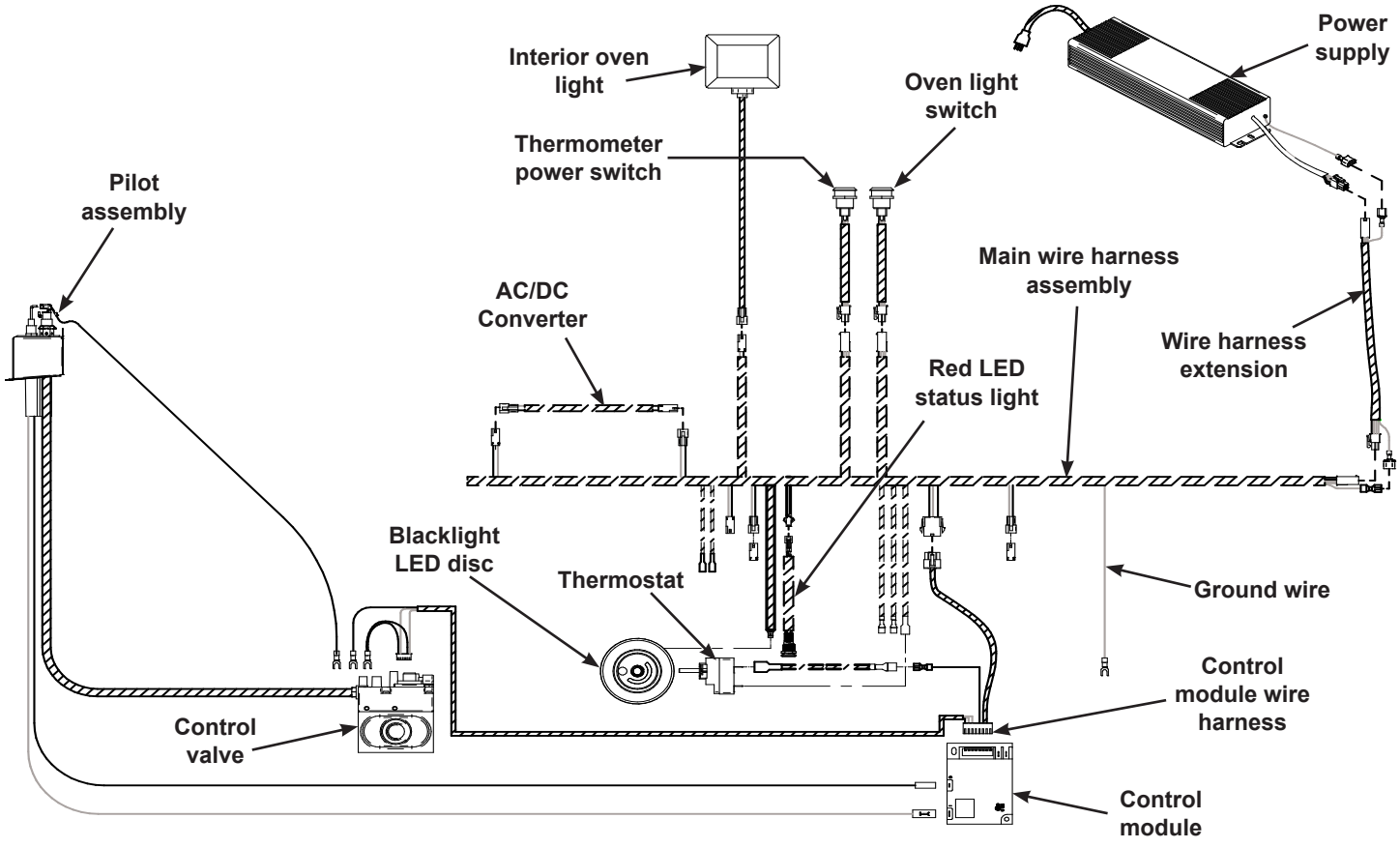

AURORA PIZZA OVEN REPLACEMENT PARTS LIST

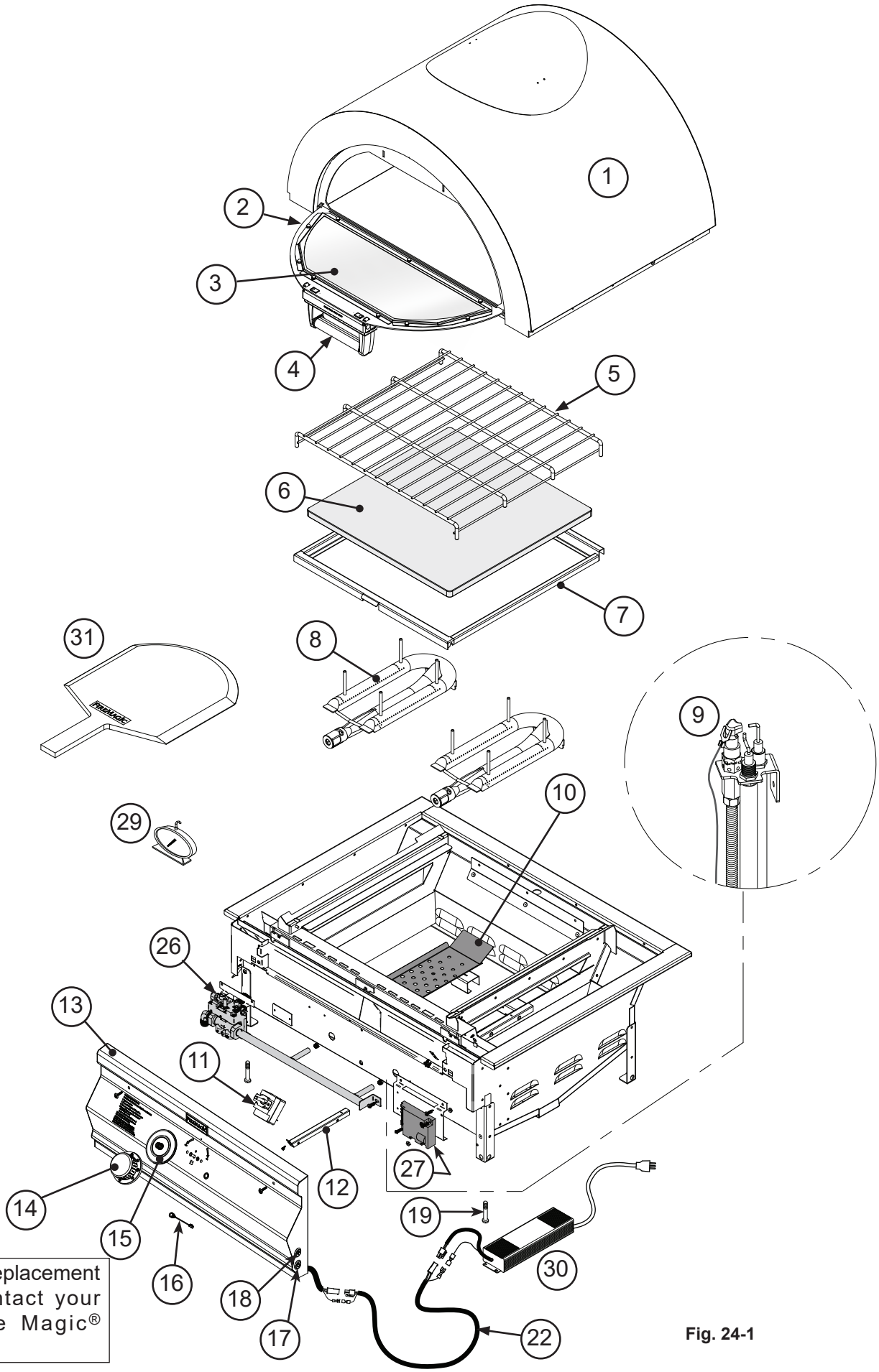

To order replacement parts, contact your local Fire Magic® dealer.

Fig. 24-1

AURORA PIZZA OVEN REPLACEMENT PARTS LIST (Cont.)

Item	Description	4600(P) Part No.	Qty.
1.	Oven lid assembly w/ door	5600-02	1
or	Oven lid assembly w/o door	5600-03	1
2.	Door assembly w/ glass and handle	5600-04	1
or	Door assembly w/ glass, w/o handle	5600-05	1
3.	Door glass (only)	24195-10	1
4.	Door handle (only)	3900-51	1
5.	Baking rack	5600-11	1
6.	Cordierite pizza stone 18" x 18"	5600-12	1
7.	Pizza stone support frame	5600-13	1
8.	Main burner	3042-60	2
9.	Pilot assembly (natural gas)	PAC-23	1
or	Pilot assembly (propane gas)	PAC-23P	1
10.	Heat distribution grid	3072-S	1
11.	Thermostat control kit	24195-12	1
12.	Thermocouple box assy	24195-26	1
13.	Control panel w/ thermostat, control knob and LED disk	4600-01	1
14.	Pizza oven control knob	24195-28	1
15.	Pizza oven LED disk assembly	24195-14	
16.	Red LED status light assembly	24195-15	1
17.	Thermometer power switch	24195-16	1
18.	Light switch	24182-48	
19.	Front support adjustment bolt (set of 2)	24182-47	1
20.	Main wire harness*	24195-27	1
21.	AC/DC converter *	24195-23	1
22.	Wire harness extension	24182-53	1
23.	**12V / 10 watt** halogen light bulb *	24187-15	1
24.	Light lens *	24187-26	1
25.	Lamp assembly *	24187-28	1
26.	Control valve w/ manifold (natural gas)	24195-20	1
or	Control valve w/ manifold (propane gas)	24195-21	1
27.	Control module	IMP-1	1
28.	Module-to-valve wire harness *	24195-24	1
29.	Analog oven thermometer	3573	1
30.	Power supply w/ connector	24182-18	1
31.	Wooden pizza peel	3514-01	1

* Not shown

DO NOT lift the unit from the control panel when installing.

BUILD / CONSTRUCT ENCLOSURE

GFRC islands are available. They accommodate your pizza oven and side cooker/accessories. Build the enclosure per the instructions supplied with the unit.

Alternatively, a custom-built enclosure can be constructed. Construct the enclosure according to your individual install preference, while following the guidelines found in the ENCLOSURE REQUIREMENTS and INSTALLATION REQUIREMENTS sections.

- Construct the enclosure in an appropriate location (ensure all requirements of this manual and all local codes are met when determining location).
- **Follow all information regarding enclosure parameters, ventilation, drainage, cylinder requirements, cutout dimensions, and clearances listed in the ENCLOSURE REQUIREMENTS and INSTALLATION REQUIREMENTS sections.** Failure to do so will prevent proper operation and can cause property damage or personal injury.

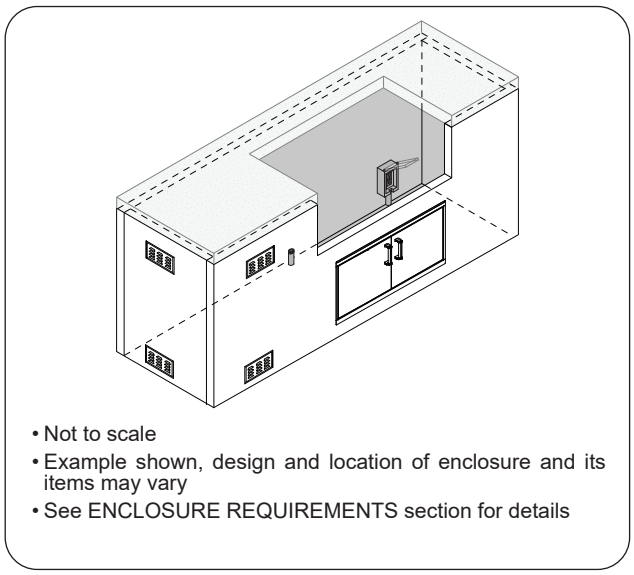

Fig. 26-1 Enclosure construction overview (if applicable)

INSTALL INSULATING LINER (if applicable)

If installing your unit in a combustible enclosure, the correct insulating liner must be used. Refer to the instructions supplied with the liner for installation.

SLIDE UNIT INTO ENCLOSURE CUTOUT

CAUTION: THE PIZZA OVEN IS HEAVY AND REQUIRES TWO OR MORE PEOPLE FOR SAFE HANDLING.

1. Detach the zip tie holding the wire harness to the front right leg of the unit.
2. Carefully slide the unit into the enclosure cutout, being sure to simultaneously route the flex connector and harness down into the enclosure. (If using an insulating liner or if the enclosure has a solid area beneath the unit, route the connections through the 2 holes/cutouts found in the enclosure/insulating liner. For details on the holes/cutouts, see the illustration under CUTOUT DIMENSIONS in the ENCLOSURE REQUIREMENTS section or refer to the instructions supplied with the liner.)
   - Ensure the electrical and gas connections are clear, undamaged, and completely inserted into the opening, and that the unit is correctly inserted without any obstructions between it and the countertop.
   - Ensure the unit fully slides in so that the control panel sits flush against the enclosure front wall. See the COUNTERTOP OVERHANG section in ENCLOSURE REQUIREMENTS for details (see Fig. 26-2).
   - If installing on a countertop with an irregular/textured surface, a bead of silicone sealer rated for 400° F (204° C) or higher between the countertop and hanger is recommended to protect from the elements.
3. Rotate the front support adjustment bolts (up or down) until the pizza oven hanger rests flush on the countertop, AND, the adjustment bolts are touching the supporting structure found at the bottom of the cutout (lower support). Use a 7/16" open-end wrench as needed. See Fig. 26-3.
   - The pizza oven should not solely rest on just the hanger or just the adjustment bolts.
   - The bolts MUST be used to provide support to the hangers.

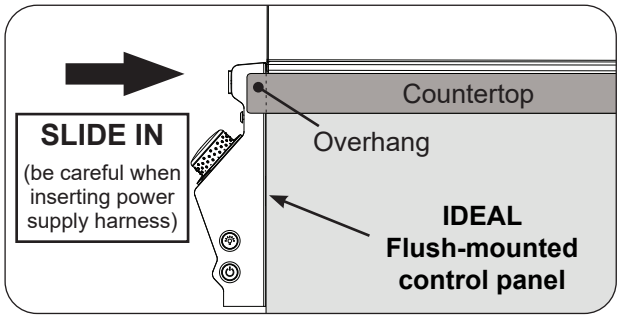

Fig. 26-2 Slide in unit (ensure flush)

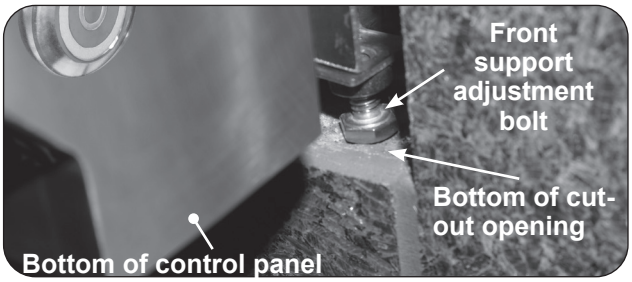

Fig. 26-3 Front support adjustment bolts

INSTALL POWER SUPPLY

If side cookers are to be installed and will be powered using the same pizza oven power supply, instead refer to the POWER SUPPLY / WIRE HARNESS CONNECTIONS section of the owner's manual included with the side cooker for power supply installation.

CAUTION: IMPROPERLY CONNECTED WIRES WILL CAUSE DAMAGE TO THE UNIT AND MAY RESULT IN PROPERTY DAMAGE AND/OR PERSONAL INJURY.

1. Take the power supply with pre-attached wire harness extension and connect it to the harness coming from the pizza oven. See Fig. 27-1.
1. Ensure the wire harness extension is routed directly downward. This will prevent overheating. **DO NOT** route the harness below the unit firebox. See Fig. 27-2.
2. Mount the power supply to the inside of the enclosure using appropriate hardware for your enclosure. **The power supply MUST BE:**
   - located at least **12"** below the bottom of the unit (see Fig. 27-3)
   - protected from weather/elements
3. Connect the power cord to a **120VAC (15AMP minimum) GFCI GROUNDED three-wire receptacle** (see Fig. 27-3). The GFCI receptacle must be a WEATHER-PROOF IN-USE COVERED RECEPTACLE.

WARNING: Electrical Grounding Instructions - This appliance is equipped with a three-pronged (grounding) plug for your protection against shock hazard and should be plugged directly into a properly grounded three-prong receptacle. Do not cut or remove the grounding prong from this plug.

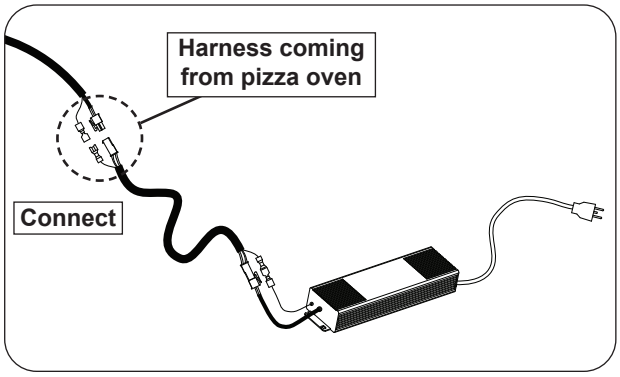

Fig. 27-1 Connect power supply to pizza oven

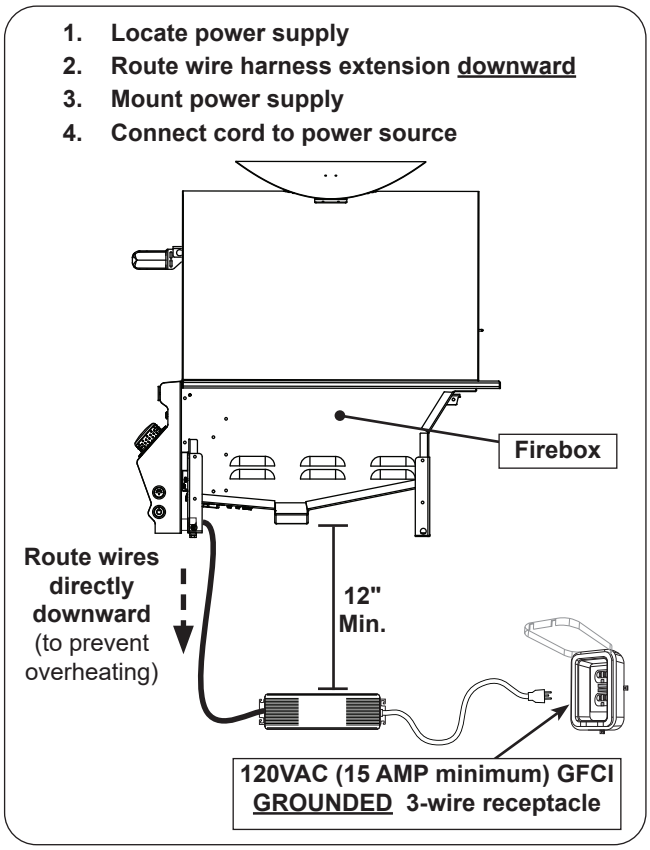

Fig. 27-2 Electrical installation

CONNECT GAS SUPPLY

To Connect To Propane Cylinder:
Read the safety warnings and follow the instructions in the section SAFE USE AND MAINTENANCE OF PROPANE GAS CYLINDERS.

Note: When a propane cylinder is installed inside of the enclosure, the guidelines found in the ENCLOSURE REQUIREMENTS section MUST be followed.

To Connect To Natural Or Household Propane Gas Supply:

CAUTION: Use only C.S.A. listed stainless-steel flex connectors within the enclosure.

WARNING

A rubber or plastic connector will rupture or leak, resulting in an explosion or serious injury if used inside the appliance enclosure.

- Before connecting the gas supply to your appliance, pressures MUST be tested and MUST NOT exceed 10.5" w.c. for Nat. gas and 13" w.c. for L.P. gas. An additional regulator may be required.
- Refer to the GAS SUPPLY PLUMBING REQUIREMENTS section for all details on the gas supply and its setup.

1. **Turn OFF the gas supply at the source.**
2. Run the attached flex connector (coming from the pizza oven) to the gas supply stub.
3. A shut-off valve is required within 6 feet of the unit and must be easily accessible.

If shut-off valve is installed in-line:

- Install the supplied flare-to-NPT adapter to the gas supply (NPT) using a pipe joint compound resistant to all gasses (see Fig. 28-1, A). Tighten securely.
- Connect the flex connector to the adapter (see Fig. 28-1, A). Tighten securely.

If shut-off valve is connected to end of gas supply stub:

- Connect the flex connector to the shut-off valve (flare) (see Fig. 28-1, B). Tighten securely.

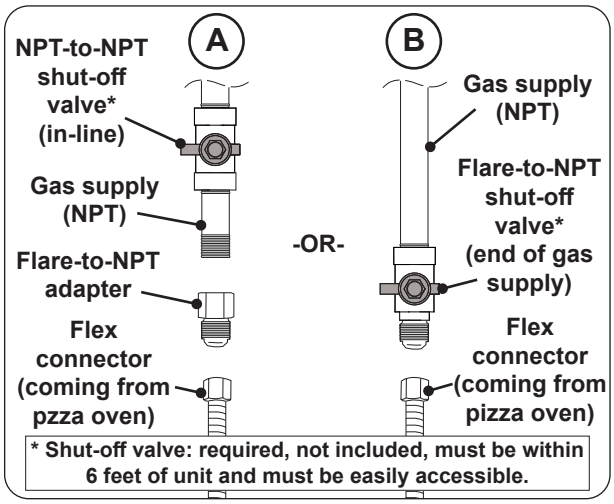

Fig. 28-1 Connecting to a gas line

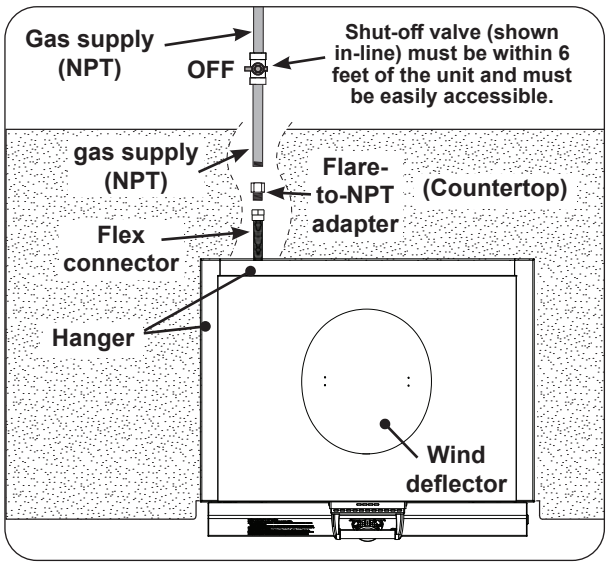

Fig. 28-2 Household LP & Nat. gas diagram

LEAK TEST

Turn the control knob to the **OFF** position. Turn on the gas supply, and test at all connections for leaks using a soapy water solution. If bubbles appear, a leak is present. Turn off the gas and tighten at all connections. Repeat until no leaks are present. If a leak persists, turn off the gas supply and contact the local gas company or dealer. **NEVER USE A FLAME TO CHECK FOR LEAKS.**

Once the leak test is complete, turn off the gas supply and allow the unit to completely cool prior to proceeding.

LIGHTING TEST

Prior to proceeding with installation, perform a lighting and operation test as instructed below.

This is required to purge the gas line of air and to inspect the pilot lighting spark. The pilot is located inside the oven below the heat distribution grid, between the two burners. See Fig. 29-1.

Important: The air **MUST** be purged from the gas line before the pilot will light and ignite the burners. The time needed to purge will depend on the length of the gas line to the unit and the amount of time since the unit or gas line was last used. **It may take several minutes before all the air is purged and the pilot will light and ignite the burners.**

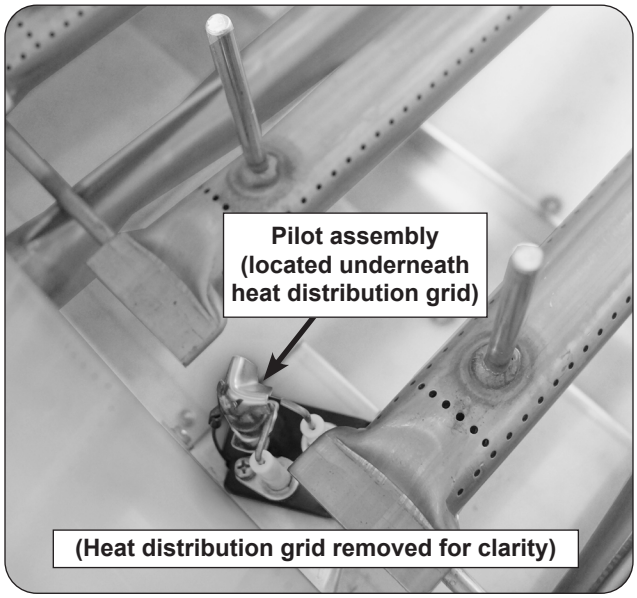

Fig. 29-1 Pilot location

Test Checklist

1. Turn on the gas supply.
2. Refer to LIGHTING INSTRUCTIONS section and follow the checklist below:
   - ☐ Turn on thermometer power switch
   - ☐ Turn unit on (via touch controls)
   - ☐ Inspect pilot - see section below

     Note: The pilot electrode stops sparking after one minute of trying to light the pilot. If the electrode stops sparking (clicking sound stops) and the pilot has not yet lit, turn off the control knob to the **OFF** position and repeat the steps above to continue the lighting sequence.
   - ☐ Verify burners are lit
   - ☐ Shut off unit (via control knob)
   - ☐ Turn off power switch
3. Turn off the gas supply.

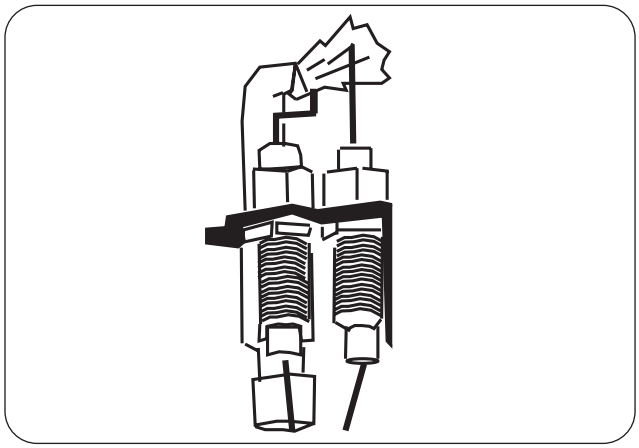

Fig. 29-2 Proper pilot appearance

INSPECT PILOT FLAME

CAUTION: Be careful around hot surfaces.

Inspect the pilot flame. It should be a quiet, soft blue flame with yellow tipping that encircles the heat sensor. See Fig. 29-2.

If the pilot does not stay lit or if it burns incorrectly, turn off the pizza oven and contact a qualified preofessional service technician.

Important: After testing, ensure the unit is completely shutdown, and the gas supply is turned off. The unit must rest for a minimum of two (2) hours to completely cool and self-calibrate the thermostat. Then proceed to the following INSTALL PIZZA STONE section.

INSTALL PIZZA STONE

Before installing the stone, wipe down the stone using a damp cloth to remove any cordierite particles and dust.

Important: For your safety, exercise caution and make sure to use adequate hand protection (such as gloves) when handling the metal support frame.

1. Carefully place the stone into the support frame (see Fig. 30-1).
2. Open the pizza oven door (lift handle to unlock, then pull).
3. Carefully insert the stone/frame into the cold oven by sliding the frame inward (as centered as possible). See Fig. 30-2.
4. Align the two notches on the support frame over the two pegs found on the oven side rails (see Fig. 30-3. The stone must lay flat and level.

INSTALL BAKING RACK (if desired)

1. Locate the four holes on the oven side rails.
2. Align and insert the baking rack legs into the four holes to secure the rack in place (see Fig. 30-4).

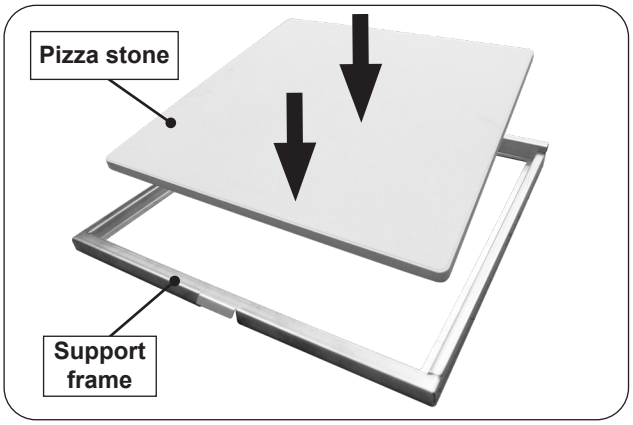

Fig. 30-1 Place pizza stone into support frame

Fig. 30-2 Insert stone/frame into pizza oven

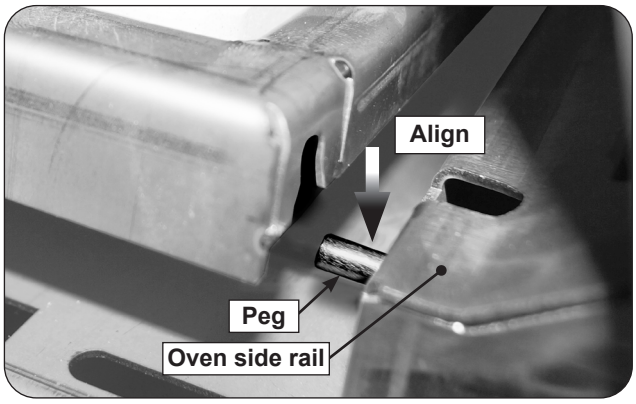

Fig. 30-3 Align frame notches to pegs

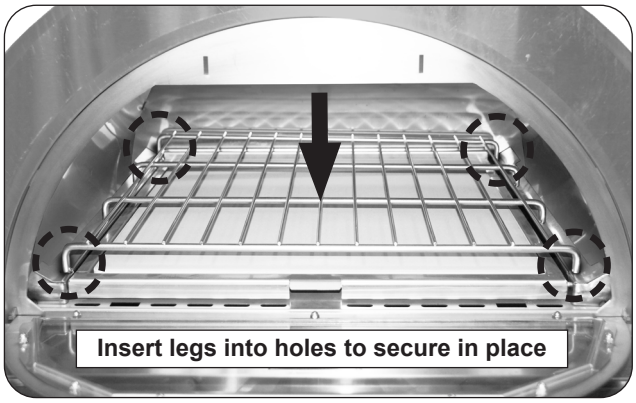

Fig. 30-4 Install baking rack

PIZZA OVEN CONTROLS AND FEATURES

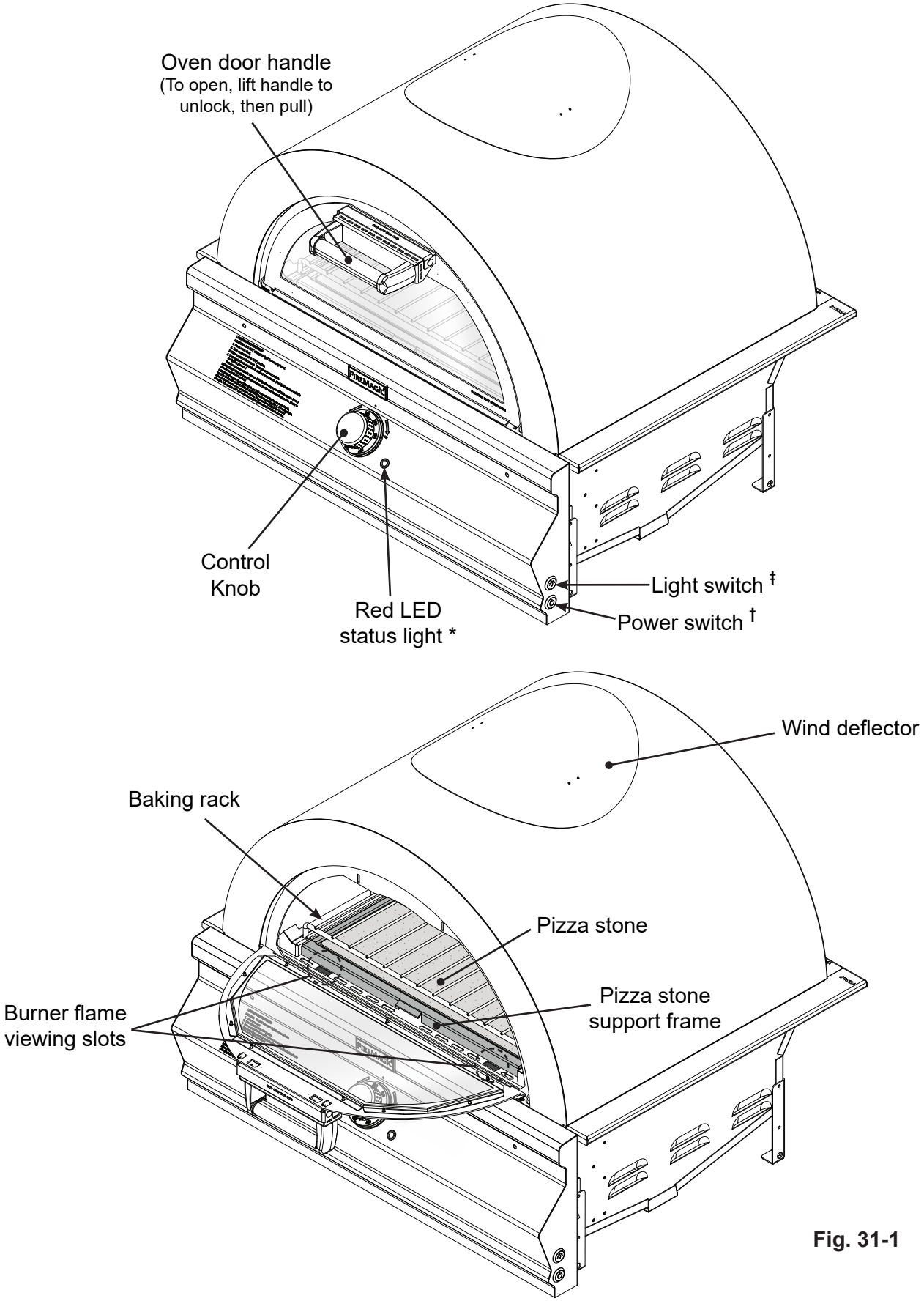

Fig. 31-1

* The **red LED status light** illuminates when the pilot is lighting OR the burners are on.

† The **power switch** is push button operated and is located on the right side of the control panel. It controls power to the thermostat system. The switch will need to be turned on prior to pizza oven use, remain on during use, and turned off after each use.

‡ The **light switch** is push button operated and is located on the left side of the control panel. It controls power to the oven light and control knob backlight LED disc.

USING THE PIZZA OVEN

BEFORE INITIAL USE

Ensure that:

- the unit has been properly installed and leak tested by a qualified professional service technician and as instructed in this manual.
- you have read and understand all of the information in this manual.

Prepare your stone (first time only):

Note: This cordierite pizza stone does not require seasoning with oils.

Bake the stone (no food or oil) at 500°F for 1 hour. See LIGHTING INSTRUCTIONS to light the pizza oven. Shut off the pizza oven and allow the stone to cool for at least 2-3 hours.

Note: The oven uses an insulation bonding agent that will emit an odor the first time it is exposed to extreme heat. The odor will dissipate quickly and it will not affect your food.

BEFORE EACH USE

Ensure that:

- you smell around the appliance area for gas. If you smell gas (and the control knob is in the OFF position), immediately shut off the gas supply and contact a qualified professional service technician or the gas supplier for inspection.
- the required vent openings and surrounding area of the enclosure are clear at all times.
- the cooking area and oven are clean, and the pizza stone (and baking rack if desired) is/are properly installed.
- you inspect all piping and hoses for damage, cuts, wear, and tear. Replace any damaged components prior to use.

OPERATION

- **The unit becomes HOT during use. NEVER touch any part of the cooking area or surrounding hot surfaces with bare hands. Use the provided pizza peel and/or long-handled insulated BBQ tools, and wear an insulated glove / oven mitt.**
- **ONLY use the door handle when opening/closing the oven door.**
- **DO NOT set any items on the door when open. It is not to be used as a shelf.**
- **Always keep your face and body as far from the unit as possible during use. Avoid wearing loose-fitting clothing as they could ignite.**
- **This appliance is designed as an attended appliance. DO NOT leave this appliance burning when unattended.**
- **After each use, turn the control knob to the OFF position, turn off the power switch, and turn off the gas supply to the unit.**

After reading and understanding all the information above, follow these steps to light and use your pizza oven:

1. Open the pizza oven door (lift the handle to unlock, then pull to open).
2. Light the oven per the LIGHTING INSTRUCTIONS section.
3. Turn the control knob to the desired temperature, visually inspect for lit burners, close the oven door, and **ALLOW THE OVEN TO PREHEAT FOR MINIMUM 25 MINUTES**. Although the oven may reach the set temperature before 25 minutes (and the red LED status light is off), **the pizza stone requires minimum 25 minutes to reach temperature.**

   Red LED status light: The red LED status light illuminates when the pilot is in the lighting process and when the burners are on. When the oven reaches temperature, the LED light will turn off (indicating the burners are off) and will turn back on if the temperature is adjusted or if the oven is maintaining the current set temperature.
4. Place the food on the pizza stone or baking rack and cook as desired. Monitor the flames and the temperature, and adjust the heat setting if necessary.
5. See below and the following pages for all other information regarding use.

Important: The thermostat and burners require the thermometer power switch to remain ON to function. **DO NOT turn off the power switch unless the control knob is set to the OFF position.**

WIND CONSIDERATIONS

Proper airflow (front-to-back, Fig. 32-1) MUST be maintained for the unit to perform as it was designed. See the INSTALLATION REQUIREMENTS section for details.

When using the unit in windy conditions, the wind can disrupt the airflow and cause overheating. To prevent overheating during windy conditions, adjust the wind deflector on top of the oven exhaust.

CAUTION: **THE WIND DEFLECTOR WILL BE HOT.**

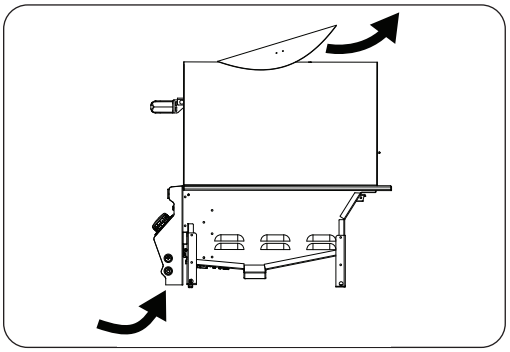

Fig. 32-1 Airflow diagram

COOKING TIPS

- The outdoor environment can alter cooking conditions. Temperature may need to be adjusted accordingly.
- When adjusting the temperature from higher temp to a lower temp, open the oven door to reach the desired temperature quicker.
- Use the included analog oven thermometer to compare the set temperature to the actual temperature.
- For easiest pizza-to-stone transferring, dust the wooden pizza peel with cornmeal or semolina flour, and assemble your pizza directly on the peel. This will allow the pizza to slide easily from the peel onto the pizza stone with a quick forward motion and sharp backward jerk. Close the oven door immediately.
- The porous pizza stone absorbs moisture from the pizza dough as it cooks to give it a crispy texture. The hotter the pizza stone, the crispier the pizza crust.
- As all pizza dough consistencies vary, be sure to monitor your pizza to avoid burning the dough.
- Opening the oven door while your pizza is cooking should be kept at a minimum to maintain a consistent oven temperature.
- Remove your pizza using the pizza peel (and additional tools if necessary).
- DO NOT cut your pizza directly on the stone. Transfer your pizza onto a tray designed for cutting/serving.
- This stone can be used to cook bread and other baked goods (such as cookies, pies, pastries, and cakes).
- Use cookie sheets, pots and pans when cooking food that is greasy or fatty. DO NOT COOK greasy/fatty foods directly on the pizza stone.

AFTER EACH USE

1. Turn the control knob to OFF position.
2. THEN turn off the power switch.
3. Allow the unit to completely cool.

CAUTION: The pizza stone will remain hot for 2-3 hours.

4. Clean off the pizza stone as instructed in the SERVICING AND CLEANING section.
5. Close the oven door and cover the unit with a pizza oven cover.

Note: For additional cleaning information, refer to the SERVICING AND CLEANING section.

ALLUMAGE DES INSTRUCTIONS (D'ALLUMAGE)

Lisez toutes les instructions avant l'allumage, et suivez ces instructions chaque fois vous lumière le unité.

ÉCLAIRAGE ÉLECTRONIQUE

ATTENTION: N'essayez PAS d'allumer le four à la main.

Note: Le unité doit être connecté à une alimentation de 120VAC pour l'allumage électronique. Si l'alimentation est indisponible, un pack de batteries est disponible pour alimenter le système d'allumage. Voir le tableau 3.

1. Ouvrez la porte du four (levez la poignée pour déverrouiller, puis tirez pour ouvrir).
2. Tournez le bouton de commande sur la position **OFF**.
3. Allumez le gaz à sa source. Appuyez ensuite sur l'interrupteur d'alimentation (vior Fig. 34-1).
4. Tournez le bouton de commande **dans le sens des aiguilles d'une montre** jusqu'à la température désirée. (Le voyant d'état LED rouge indique que l'unité est en cours d'allumage.)

   L'allumeur commencera à produire des étincelles. Une fois la veilleuse allumée et établie, la vanne s'ouvrira et les brûleurs s'allumeront.

Note: Cette séquence prendra environ 5 secondes.

Important: Inspectez visuellement les flammes du brûleur via les deux fentes rectangulaires d'observation des flammes (vior Fig. 34-2).

ATTENTION: Si les brûleurs ne s'allument pas dans les dix (10) *secondes* suivant l'activation du bouton de commande, tournez-le à la position **OFF**. ATTENDRE CINQ (5) *MINUTES* avant de répéter l'étape 4. Si vous sentez une odeur de gaz, suivez les instructions sur la couverture de ce manuel. Si les brûleurs ne s'allument toujours pas après plusieurs tentatives, éteignez le système et contactez un technicien de service professionnel qualifié.

Note: NE PAS utiliser une force excessive lorsque vous tournez le bouton.

EN EMPLOYANT UN RÉSERVOIR DE PROPANE PORTATIF

Des réservoirs de propane sont équipés d'un dispositif d'arrêt de sûreté qui peut ne pas causer le bas ou aucunes pression de gaz/flamme aux brûleurs si le fonctionnement et l'allumage des instructions ne sont pas suivis exactement (voir la note importante dans la section de dépannage pour plus de détails.)

ARRÊT DU UNITÉ

Pour éteindre l'appareil, tournez le bouton de commande dans le sens inverse des aiguilles d'une montre jusqu'à la position **OFF**, PUIS éteignez l'interrupteur d'alimentation.

Important: Tournez toujours le bouton de commande sur la position **OFF** AVANT d'éteindre l'interrupteur d'alimentation.

Important: Fermez toujours le robinet de l'alimentation en gaz après chaque utilisation de l'appareil.

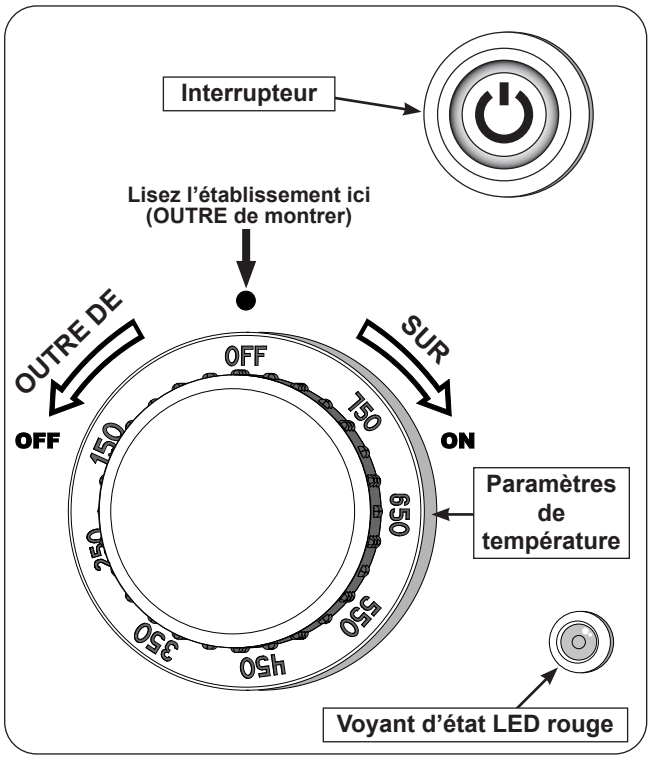

Fig. 34-1 Composants d'allumage

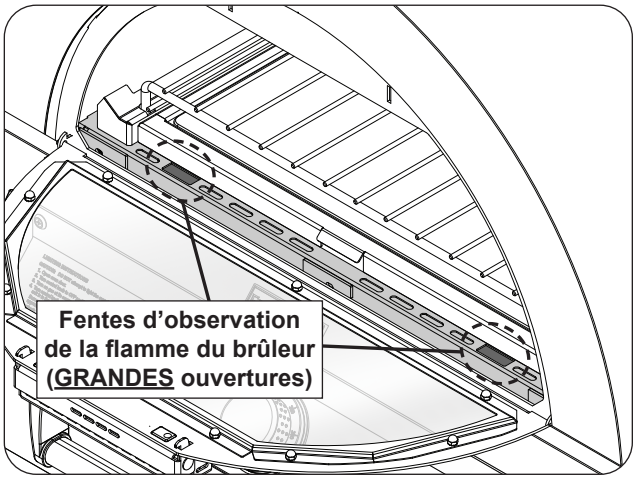

Fig. 34-2 Fentes de visualisation de la flamme du brûleur

Pour votre commodité et votre sécurité, lorsque le système d'allumage allume l'appareil ET lorsque les brûleurs sont allumés, le voyant d'état à DEL rouge s'allume (voir fig. 34-1).

Note: Les brûleurs fonctionnent par intermittence car le four à pizza maintient une température constante.

LIGHTING (IGNITION) INSTRUCTIONS

Read all instructions before lighting, and follow these instructions each time you light the unit.

ELECTRONIC LIGHTING

CAUTION: DO NOT attempt to light the oven by hand.

Note: This unit must be connected to 120VAC power for electronic lighting. If power is unavailable, a battery pack is available to power the ignition system. See Table 3.

1. Open the oven door (lift handle to unlock, then pull to open).
2. Turn the control knob to the **OFF** position.
3. Turn on the gas at its source. Then press the power switch (see Fig. 35-1).
4. Turn the control knob **clockwise** to the desired temperature. (The red LED status light indicates the unit is in the lighting process.)

   The igniter will begin to spark. After the pilot lights and is established, the valve will open and the burners will light.

Note: This sequence will take approximately 5 seconds.

Important: Visually inspect the burner flames via the two rectangular flame viewing slots (see Fig. 35-2).

CAUTION: If the burners do not light within ten (10) *seconds* of turning on the control knob, turn it to the **OFF** position. WAIT FIVE (5) *MINUTES* before repeating step 4. If you smell gas, follow the instructions on the cover of this manual. If the burners still do not light after several attempts, turn the system **OFF** and contact a qualified professional service technician.

Note: DO NOT use excessive force when turning the knob.

WHEN USING A PORTABLE PROPANE TANK

Propane tanks are equipped with a safety shutdown device that may cause low or no gas pressure/flame at the burners if operating and lighting instructions are not followed exactly (See important note in the TROUBLESHOOTING section for more details.)

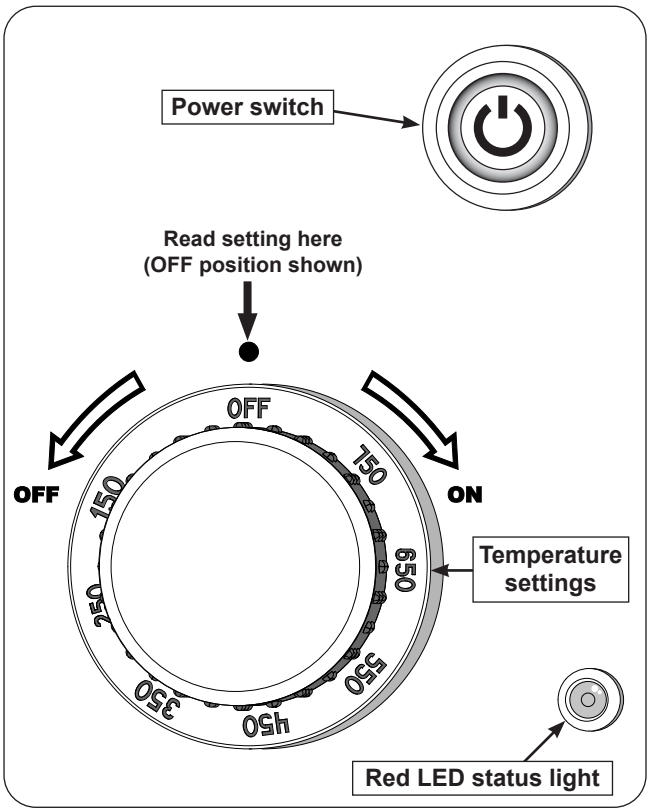

Fig. 35-1 Ignition components

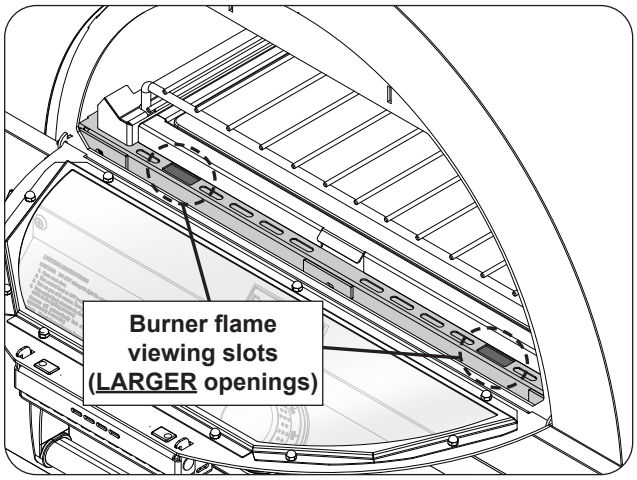

Fig. 35-2 Burner flame viewing slots

SHUTTING OFF THE UNIT

To shut off the unit, turn the control knob counterclockwise to the **OFF** position, THEN turn off the power switch.

Important: Always turn the control knob to the **OFF** position BEFORE turning off the power switch.

Important: Always close the valve from the gas supply after each use of the unit.

For your convenience and safety, when the ignition system is lighting the unit AND when the burners are lit, the red LED status light will illuminate (see Fig. 35-1).

Note: The burners operate intermittently as the pizza oven maintains a constant temperature.

SERVICING AND CLEANING

Your pizza oven requires regular cleaning and maintenance. Refer to these instructions for details. Performing these procedures will ensure proper operation, appearance, and safety.

WARNINGS

- **The pizza stone will remain hot for at least 2-3 hours after use.**
- Prior to servicing or cleaning make sure the unit is completely cool, the control knob is turned to the OFF position, the gas supply is shut off, the power and light switches are off, and the power supply is disconnected (as applicable and unless otherwise stated).
- Wear appropriate gloves and safety glasses during any servicing or cleaning.
- DO NOT spray any cleaner or liquids on the interior or exterior of the pizza oven when hot.
- Ensure the pizza stone is completely dry before each use. This will extend the life of the stone.
- The pizza oven MUST be cleaned regularly to prevent grease build-up and other food deposits. A clean and well maintained pizza oven prevents the risk of grease build-up and grease fires.
- Verify proper operation after servicing or deep cleaning.
- See INSTALLATION, OPERATION, AND SAFETY INFORMATION sections for additional related information.

CLEANING YOUR PIZZA OVEN

Before Each Use

1. **Inspect and clean the exterior surfaces of the unit:** With a cool pizza oven, clean any dust, grease, splatter, or spills as needed with a damp clean cloth.
2. **Clean the glass:**
   - Clean the oven window (interior and exterior) with a quality brand glass cleaner and clean cloth.

After Each Use

1. **Clean the pizza stone, frame, and baking rack:** Once completely cool, remove the baking rack and stone/frame from the oven (see BAKING RACK REMOVAL and PIZZA STONE REMOVAL sections). Remove the stone from the frame, scrape off any food deposits with a rubber or plastic spatula/scraper, scrub the stone surface with a scouring pad, and then wipe it down with a damp clean cloth.

   For a deeper clean, make a cleaning paste (half baking soda / half water solution) and give the stone a deep scrub using a scouring pad. Rinse with warm water and dry with a cloth.

   Important: **DO NOT USE SOAP OR DETERGENT.** The stone will absorb the chemical and could taint the flavors in your next meal.

   Note: Allow the stone to dry completely before use.

   Note: The pizza stone will darken and develop black stains with use over time. It is not recommended to try to remove these discolorations. It is natural and will not affect the cooking performance of the stone.

   To clean the frame and rack, wash in a soapy water solution, rinse, dry, and set aside.

   Note: Due to the nature of stainless steel, discoloration may appear.
2. **Clean the oven interior (if needed):** You may also wipe off the oven interior surfaces with a damp clean cloth.

   Important: Wear long-cuffed gloves to protect hands and arms while cleaning the oven interior.
3. **Reinstall the stone/frame and rack:** Place the dry stone into the frame and reinstall the assembly back inside of the oven. Install the rack if desired. See the INSTALLATION section as needed.
4. **Clean the wooden pizza peel:** Use a scrub pad or brush to remove food deposits and wipe the peel down with a damp clean cloth. If needed, use white vinegar while scrubbing to remove stains and disinfect. Rinse with warm water and dry with a clean cloth. Allow the peel to dry completely before using or storing in a cabinet.
5. **Glass surfaces:** For hard water stains on glass, it is recommended to clean the glass using a white vinegar / water solution and wiping clean with a soft cloth.
6. **Cover your pizza oven:** Once the pizza oven is dry and cool, cover the unit with a Fire Magic protective cover (not included).

Twice A Year - Deep Clean

Important: Wear long-cuffed gloves to protect hands and arms while cleaning.

1. **Interior of pizza oven:** In addition to cleaning the stone/frame, baking rack, and pizza peel, a deep clean of the interior of the oven, burners, and all components MUST be performed twice a year. Follow the steps below.

   a. With a cool pizza oven, remove the baking rack, stone/frame, heat distribution grid, and burners. Clean all components (except the stone) in a soapy water solution, rinse, dry, and set aside. For tough deposits and burners, a copper pad can be used.

   Note: Refer to the parts list and the REMOVAL sections as needed.

   Important: The burner ports and carry-over ports/slots MUST be kept clean to ensure proper ignition and operation.

   b. Refer to the previous page for details on cleaning the pizza stone. For a deeper clean, make a cleaning paste (half baking soda/half water solution) and give the stone a deep scrub using a scouring pad. Rinse with warm water and dry with a cloth.

   Important: **DO NOT USE SOAP OR DETERGENT.** The stone will absorb the chemical and could taint the flavors in your next meal.

   c. Use a stainless steel putty knife to remove any grease and food deposits from the interior liner. Use a vacuum cleaner to pick up all loose debris from the oven floor. Then use a grill cleaner and a copper pad to scrub the liner. Fire Magic grill cleaner is recommended. Follow instructions provided with the grill cleaner.

   Wipe down the entire surface of the liner with a wet, clean, heavy-duty rag. Remove all cleaner.

   d. Clean the interior of the oven door window by scrubbing it with a copper pad soaked in a wash bucket solution. A heavy duty oven cleaner such as Easy-Off® may be used. Wipe down with a damp clean cloth. Remove all cleaner.

   e. Re-install all components removed during this process.

2. **Exterior of pizza oven:** With a cool pizza oven, use a grill cleaner (or a soapy water solution) and a clean cloth to remove grease and dirt. For tough deposits, a copper pad can be used. Always wipe with the grain. Rinse and dry completely. Then follow up with a stainless steel cleaner and a clean cloth. To clean the oven door window, use a quality brand glass cleaner. For hard water stains, it is recommended to clean the glass using white vinegar and water. DO NOT use other cleaners or chemicals.

   If this routine cleaning is not performed, the stainless steel may become dull and develop surface rust (due to use and atmospheric conditions). If left uncleaned, significant damage and pitting may occur.

Fig. 37-1 Wipe with grain

   Important: DO NOT use steel wool, any other metal tools, or any other cleaners/chemicals to clean the exterior other than recommended above. Such items promote rust.

   Note: Due to the nature of stainless steel, temperatures produced by the cooking process will cause discoloration. This can be reduced by routine cleaning.

For Environments High In Salt, Chloride, Or Other Corrosive Chemicals

When this appliance is installed in a corrosive environment such as near the ocean (salt air), poolside (chlorine and/or pool chemicals) or any other location with exposure to high salt/chloride content or corrosive chemicals/ solutions, it will be more susceptible to corrosion and MUST be maintained/cleaned more frequently.

- DO NOT store any corrosive chemicals (chlorine, hydrochloric acid, fertilizer, etc.) near your stainless steel appliance.
- DO NOT allow any corrosive materials (masonry dust, debris, etc.) to settle on your stainless steel appliance.
- These environments, chemicals, and materials may cause the 304 stainless steel to develop surface rust and consequently pitting. Under these conditions the pizza oven exterior MUST be cleaned at least monthly. Inspect your pizza oven often and clean accordingly.

Protecting Your Pizza Oven

An optional Fire Magic protective cover will protect your pizza oven when not in use. Install the cover on a cool and dry unit. DO NOT cover a damp pizza oven. During high humidity or after rainy conditions, remove the cover to dry trapped moisture if present. (If the cover is installed over a damp appliance it can cause surface rust.)

Ensure that the INSIDE of the cover is DRY before putting it back on the unit.

REPLACING HALOGEN BULBS

To replace the interior oven light, follow the instructions below.

Important: ONLY REPLACE WITH 12V / 10 WATT HALOGEN BULB.

WARNING

To protect from potentially sharp sheet metal and glass, wear gloves and safety glasses during this procedure.

1. Ensure the thermometer power switch is in the **OFF** position and shut off the gas supply to the unit at the source.
2. Disconnect supply of external electrical power to the unit.

CAUTION: Wait for the oven, lens, light bulb, and fixture to cool before proceeding to the next step.

3. Open the oven door.

Important: Place one hand directly below the glass lens and prepare to catch it when it is detached.

4. Carefully insert a standard flat head screwdriver or thin plastic spatula between the glass lens and the stainless steel on which the light is mounted and gently pry the glass lens out in such a way that the stainless steel is not scratched (twisting the screwdriver handle, for instance). Catch the lens and set it safely aside.

Note: You may wish to take this opportunity to clean the lens with a standard household window cleaner and then dry it completely.

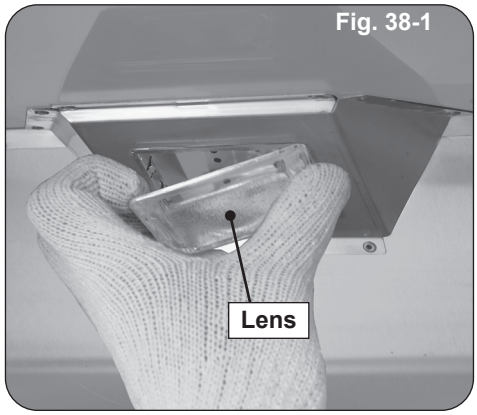

Fig. 38-1

5. Wearing a pair of gloves, reach into the fixture, gently grab the bulb, and pull it straight out of the fixture so that the two pins at the base of the bulb come all the way out.

Important: Bulb is halogen. DO NOT TOUCH with bare hands. Oils from hands drastically reduce bulb life.

Note: It may be helpful to rock the bulb gently backward and forward while pulling it out.

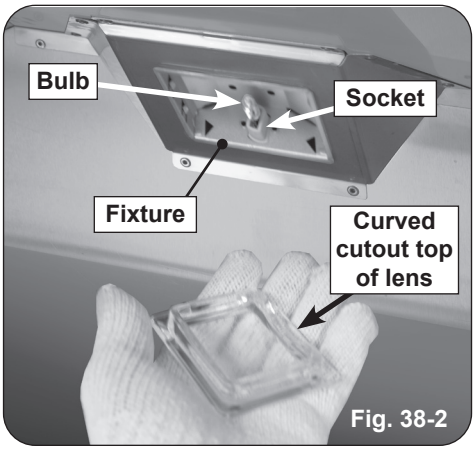

Fig. 38-2

6. Inspect the old bulb for broken glass or filament.

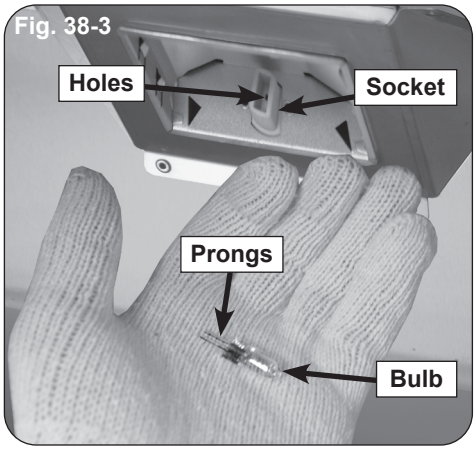

Fig. 38-3

7. Insert the new **12V / 10 watt** halogen bulb into the socket so that both pins slide all the way into the two holes in the bottom of the socket.
8. Place the lens back into the fixture opening with the curved cutout on the bottom and snap it back into place.

CONTROL PANEL REMOVAL

1. **Turn the control knob to the OFF position and turn off the gas supply to the unit.**
2. Turn off the power switch, light switch and disconnect the power supply from the power source.
3. Using a Phillips screwdriver, unscrew and remove the control panel fastener screws and washers (located on the left and right front face of the control panel). Retain the screws for later re-installation.
4. Carefully open the control panel by lifting and pulling the control panel from the frame, allowing it to rest on the internal chain(s).

Important: When opening, take caution to not damage any wiring.

5. If wire disconnections are required, reference the wire diagram in the MODEL SPECIFICATIONS section in this instruction manual or the wire diagram label affixed to the inside of the control panel.

Note: Secure any disconnected wires (coming from the inside of the unit) to prevent them from falling in.

Note: Whenever reconnecting any wires, apply a small amount of dielectric grease to the male connector, then make the connection. This will ensure conductivity and prevent moisture from affecting the contact.

Important: During reinstallation; prior to opening the gas shut-off valve, be sure the control knob is in the OFF position.

BAKING RACK REMOVAL

Begin with a completely cool pizza oven. Lift the baking rack straight up to free the four legs from the holes on the oven side rails, then carefully pull the rack out of the pizza oven (see Fig. 40-1).

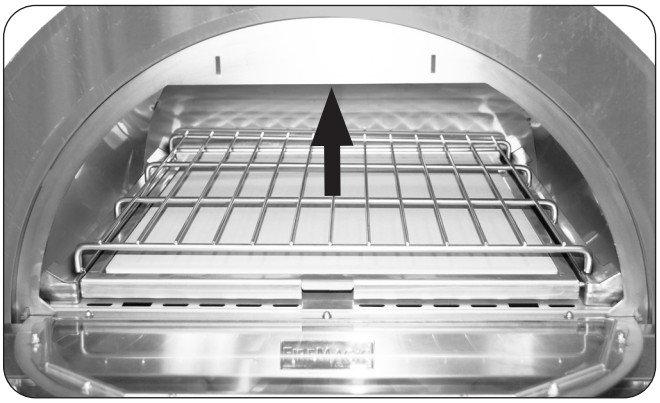

Fig. 40-1 Baking rack removal

PIZZA STONE REMOVAL

CAUTION: **DO NOT REMOVE THE PIZZA STONE WHILE HOT.**

CAUTION: **The pizza stone MUST ONLY be removed from the oven along with the support frame.**

Important: For your safety, exercise caution, and make sure to use adequate hand protection such as gloves, when handling the metal support frame.

1. **Begin with a completely cool pizza oven.** Remove the baking rack (see removal section above).
2. Grasp the center front tab of the pizza stone support frame and carefully lift upward to free the notches from the left and right side rail pegs (see Fig. 40-2, A).
3. Carefully slide the support frame partially out of the oven.

Note: Take extra caution to not let the frame touch the glass on the oven door when sliding outward.

4. Reposition your hands from the front tab to the sides of the frame. Lift the frame upward and out of the oven. See Fig. 40-2, B.
5. Replace the stone/frame once complete.

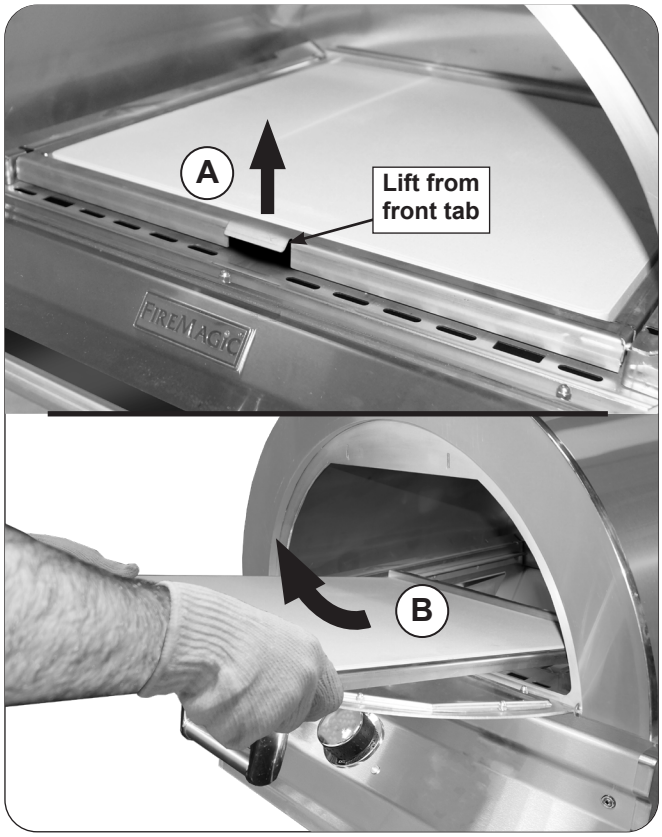

Fig. 40-2 Stone/frame removal

HEAT DISTRIBUTION GRID REMOVAL

1. **Begin with a completely cool pizza oven.** Remove the baking rack and pizza stone (see removal sections above).
2. Locate the heat distribution grid mounted to the front firebox of the pizza oven.
3. Loosen the two 5/16" hex screws and remove the heat distribution grid by lifting up, then outward, freeing the cutouts from the two loosened screws (see Fig. 41-1).
4. Replace the grid and stone/frame once complete.

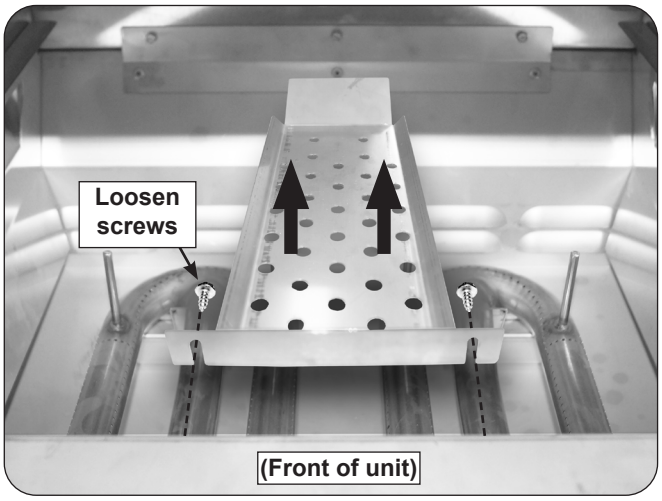

Fig. 41-1 Heat distribution grid removal

BURNER REMOVAL

1. **Begin with a cool pizza oven.** Remove the baking rack, pizza stone, and heat distribution grid. See previous sections for removal.
2. Locate the burner clip (located over the rear center tube of the burner) and slightly pinch and remove the clip from the burner support (see Fig. 41-2).
3. Carefully lift the burner from the burner support anchor peg holes and out from the hole in the forward fire wall.
4. To replace the burner, slide the open cylindrical end of the burner around the orifice, enveloping it and centering on it. Then lower the back end anchor pegs into the burner support anchor peg holes.

Note: It is critical to the continued safe functioning of the burners that the orifices are centered and completely inside the burner gas inlets.

5. Re-install the burner clip around the burner and into the holes in the burner support.
6. Repeat this process for the other burner, if needed.
7. Replace the heat distribution grid, pizza stone, and baking rack.

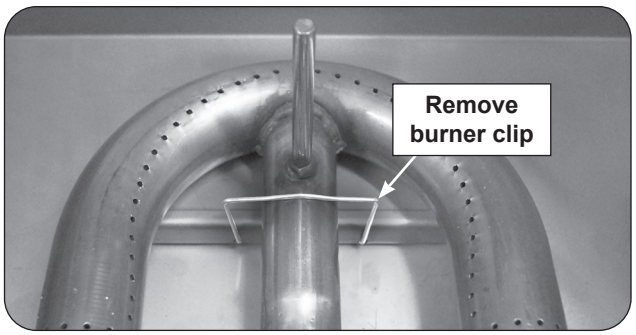

Fig. 41-2 Burner clip removal

INSPECT PILOT AND ITS FLAME (if needed)

CAUTION: Be careful around hot surfaces.

Ensure the pilot assembly is clear of foreign objects.

Inspect the pilot flame. It should be a quiet, soft blue flame with yellow tipping that encircles the heat sensor. See Fig. 42-4.

If the pilot does not stay lit or if it burns incorrectly, turn off completely and contact a qualified preofessional service technician.

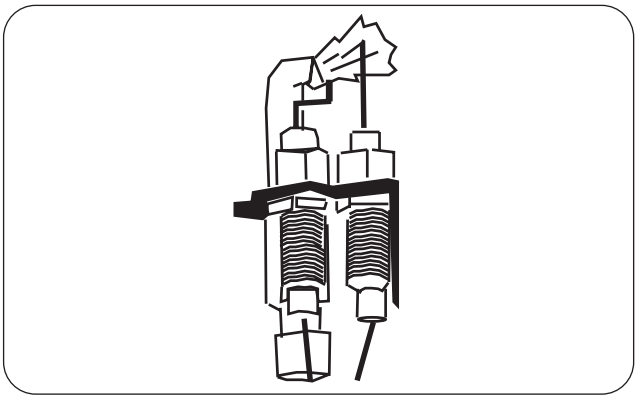

Fig. 42-1 Proper pilot appearance

AIR SHUTTER ADJUSTMENT / BURNER FLAME INSPECTION

The baking rack, pizza stone, and heat distribution grid MUST be removed to inspect the flames and adjust the air shutters.

Important: Air shutters are preset at the factory (see Table 2 in MODEL SPECIFICATIONS). However, gas conversion, altitude, or other local conditions may make it necessary to adjust the air shutters.

Note: To verify proper settings, the flames of the burners should be visually checked for proper flame appearance and behavior. Light the pizza oven by turning the control knob. Allow at least 2 minutes to burn. See below and Fig. 43-1. The flames should:

- be blue and stable with little to no yellow tips
- burn quietly, and appear to touch the burner

If the flames appear unstable, yellow, noisy, or lift away from the burner, follow the steps below.

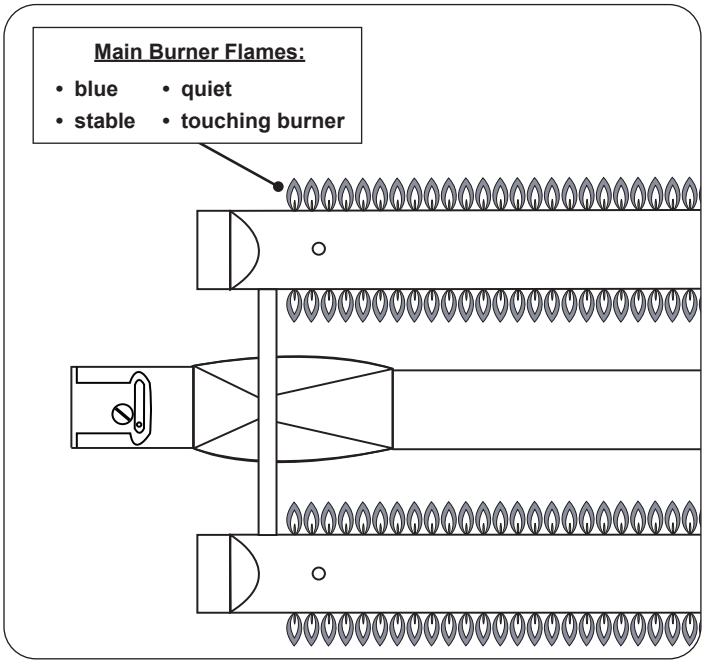

Fig. 43-1 Proper flame appearance

Main Burner

Begin with a completely cool unit. Remove the burners (see BURNER REMOVAL section). First ensure the burner orifice, ports, venturi tubes, and air shutter openings are all clear of any insect or insect nests. If they are blocked, clean them, reinstall the burners, and reinspect the flames. If adjustment is still needed, **allow the unit to cool**, remove the burner, and proceed to the steps below.

1. To adjust the air shutter, loosen the adjustment screw with a flathead screwdriver. Then rotate the shutter to open or close it. See Fig. 43-2 for details.
   - Begin with the appropriate factory setting for your model (see Table 2 if needed).
   - If the flames were excessively yellow (insufficient air), open the shutter to allow more air to the burner. If the flames were noisy and lifting off the burner in some areas, close the shutter to allow less air to the burner. Adjust accordingly.

Note: Make minimal adjustments. Very small changes result in major changes in flame appearance.

2. Reinstall the burner, light the pizza oven by turning the control knob, and observe the flames. If needed, allow the unit to completely cool, and repeat the adjustment process until the proper flame is achieved.
3. Once finished, allow the unit to completely cool, remove the burner, and tighten the adjustment screw. Reinstall the burner.
4. Repeat for the other main burner.
5. Reinstall all other components that were removed.

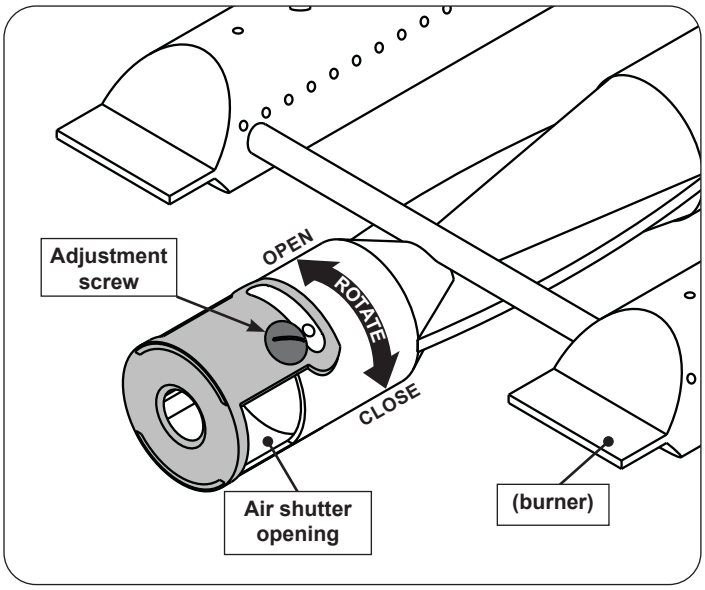

Fig. 43-2 Main burner air shutter adjustment detail

TROUBLESHOOTING

If you have trouble with the unit, please use this list to identify the problem. By trying one or more of the solutions to the possible cause, you should be able to solve the problem. If this list does not cover your present problem, or if you have other technical difficulties with the unit, please contact your local dealer.

PROBLEM	POSSIBLE CAUSE	CORRECTION
Pizza oven does not work	1. Power failure	1. Check if power is available.
	2. Power not connected properly	2a. Power supply in "protection mode" - perform system reset: Disconnect harness from power supply, then power supply from power source. Check/replace harnesses as needed. Ensure power GFCI breaker is reset. Reconnect power supply, then harness extension. Test pizza oven components. If still not working, replace power supply. Green LED light on power supply indicates it is working properly.
		2b. Replace power supply.
	3. Power not connected properly	3. Make sure the power source and powering equipment is properly connected and tested.
	4. GFCI or circuit breaker may be tripped	4. Reset GFCI or circuit breaker.
Pilot will not light	1. Obstruction in pilot gas supply or pilot gas-supply line is kinked	1. Clear out obstruction. Replace pilot gas-supply line if kinked.
	2. Inadequate gas supply	2. Have gas pressure checked by installer or gas supplier.
	3. Air in line	3. Purge air in line. See LIGHTING TEST section.
No spark at pilot	1. Loose wires	1. Check all wires are securely in place.
	2. Unit not receiving power	2a. Turn on power switch (right hand side of control panel).
		2b. Check power supply / power source.
	3. Faulty control module	3. Check and/or replace control module.
Pilot lights, but main burners do not light	1. Wire leads are not connected to proper valve terminals	1. Make sure all wire leads are tight and attached to proper terminals (see wiring diagram section).
	2. Defective control module or valve	2. Check and/or replace.
	3. Improper air shutter adjustment	3. Adjust air shutters.
	4. Low gas pressure	4. Have the gas co. check pressure at unit.
	5. Front carry-over ports clogged	5. Clean burner ports.
	6. Pilot malfunction	6. See "Pilot will not light" section above.
Main burner lights, but not all burner ports fully ignite	1. Improper air shutter adjustment	1. Adjust air shutters.

Toubleshooting continued on following page

TROUBLESHOOTING (Cont.)

PROBLEM	POSSIBLE CAUSE	CORRECTION
Insufficient heat / low flame	1. Burner ports clogged	1. Clean burner ports.
	2. Improper air shutter adjustment	2. Adjust air shutters.
	3. Using propane orifice for natural gas	3. Check/change orifices.
	4. Low gas pressure/flame (propane)	4. Shut off unit to close all valves, close propane tank valve, and follow lighting instructions exactly. (See important note* below.)
	5. Low gas pressure/flame (natural)	5. Have a qualified professional service technician check for proper gas supply, setup, and pressure.
	6. L.P. regulator hose stuck/damaged	6. Replace L.P. regulator hose.
Uneven heating	1. Burner ports partially blocked by debris	1. Remove burners and clean out ports.
	2. Small spiders or insects in burner	2. Inspect burners and orifices for spider webs or other debris that may block flow.
	3. Improper air shutter adjustment	3. Adjust air shutters.
Interior oven light not working	1. Power source not connected	1. Hook external power to unit.
	2. Check light switch	2a. Turn on Light switch (right hand side of control panel) 2b. Contact dealer for replacement.
	3. Light bulb burned out	3. Contact dealer for replacement.
	4. Light bulb wire not connected	4. Check connections and/or replace.
Red LED status light not working	1. LED light malfunction	1. Contact dealer for replacement.

* **Important:** Propane tanks are equipped with a safety shutdown device that may cause low or no gas/flame at the burners if operating and lighting instructions are not followed exactly. If you suspect the propane tank safety shutoff is in effect: 1) Shut off the pizza oven control knob. 2) Shut off tank valve. 3) Turn on oven control knob, then turn off. 4) Open tank valve. 5) Follow the LIGHTING INSTRUCTIONS. Lighting instructions are located in your owner's manual and printed on the front face of the unit. If the problem persists, continue troubleshooting, or contact your local dealer or R. H. Peterson for assistance.

WARRANTY

PETERSON FIRE MAGIC GRILLS AND ACCESSORIES

LIMITED WARRANTY

R.H. Peterson Co. ("RHP") warrants your Fire Magic® grill to be free from defects in material and workmanship.

Fire Magic cast stainless-steel gas burners, Choice stainless steel U shaped burners, cooking grids, and Barbecue and vent hood housings are warranted **as long as the original purchaser owns them -- LIFETIME**. (Except as described below.)

Fire Magic brass valves, manifold assemblies, inner liners, porcelain housings (including ovens and barbecue faces), and **backburner assemblies** (except ignition systems) are warranted for **FIFTEEN (15) YEARS**.

Fire Magic built-in pizza ovens and griddles (except ignition system and thermostat) are warranted for **TEN (10) YEARS**.

Fire Magic heating elements, Infra-red burners, flavor grids, and charcoal stainless steel grills are warranted for **FIVE (5) YEARS**; except for the charcoal pan, charcoal grid, thermometer, and ash catch tray, which are warranted for **ONE (1) YEAR**.

Fire Magic sideburners, exterior Glass Fiber Reinforced Concrete (GFRC) grill island systems, and all other grill, vent hood, pizza oven and griddle components (except ignition systems and electronic parts) are warranted for **THREE (3) YEARS**.

Fire Magic Echelon gas grill, pizza oven and EL500 electric grill under glass touch screen electronic controls are warranted for **TWO (2) YEARS.**

Fire Magic grill, pizza oven and griddle ignition systems (excluding batteries), electronic components (including lights, thermometers and thermostats) and accessories are warranted for **ONE (1) YEAR**.

A COPY OF YOUR SALES SLIP FOR PROOF OF PURCHASE IS REQUIRED

This warranty applies to the original purchaser for products which are installed in the United States or Canada and which are operated and maintained as intended for single family residential usage (if the unit is installed in a commercial / multi-user setting, a separate Commercial / Multi-User Limited Warranty applies and is available from RHP). This warranty is valid only with proof of purchase, commences on the date of purchase, and terminates (both as to original and any replacement products) on the anniversary date of the original purchase of the product per the above schedules.

This warranty **does not** cover parts which become defective as a result of negligence, misuse, use not in compliance with the Installation and Owner's Manual, accidental damage, improper handling, improper storage, improper installation, **lack of required routine maintenance** (as specified in the Installation and Owner's Manual), electrical damage, local gas impurities or failure to protect against combustible materials. Product must be installed (and gas must be connected) as specified in the Installation and Owner's Manual by a **qualified professional installer**. This warranty **does not** apply to rust, corrosion, oxidation, or discoloration unless the affected part becomes inoperable. RHP products including valves, pilots and controls are designed and certified to be used as a system. Modifications to products which are not specifically authorized will void this warranty and could render the product to be unsafe. Burners, valves, parts, remotes, accessories, etc. used with this product must be RHP products or this warranty is void.

Warrantied items will be repaired or replaced at RHP's sole discretion. This warranty **does not** cover labor or labor related charges, except as provided by separate specific written programs from RHP. All repair work must be performed by a qualified professional service person and requires prior approval of RHP.

RHP may require the defective product or part to be returned to the factory to determine the cause of failure. RHP will pay freight charges if the product or part is determined to be defective. This warranty does not cover breakage in shipment from our independent distributor to its customer if the damage is determined to have occurred during that shipment.

This warranty specifically excludes liability for **indirect**, **incidental**, or consequential damages. Some states and provinces do not allow the exclusion or limitation of incidental or consequential damages, so the above exclusion may not apply to you. This warranty gives you specified legal rights, and you may have other rights that vary from state to state or province.

For additional information regarding this warranty, or to place a warranty claim, contact the RHP dealer where the product was purchased.

When contacting your RHP dealer or the R.H. Peterson Co., please provide the following information:

- Your name, address, telephone number, e-mail
- Sales receipt showing where purchased and date purchased
- Model number, serial number of product, date code
- Relevant information: installer, additions, repairs, when defect was first noted

TO REGISTER YOUR PRODUCT ONLINE GO TO: WWW.RHPETERSON.COM, AND CLICK ON PRODUCT REGISTRATION. THANK YOU FOR YOUR PURCHASE.

Quality Check			Date:_____
Burner Orifices	Nat.	L.P.	Leak Test: _____
Main:	____	____	Burn Test: _____
			Gas Type: Nat. / L.P.
Other:	____	____	Air Shutter: _____
			Inspector: _____

Model #:	
Serial #:	