Dimplex®

Experience Better Living.

Firebox
Series

IGNITE® Aspire

Redefining the traditional fireplace.

Dimplex®

Experience Better Living.

IGNITE® Aspire
Built-in Portrait Electric Firebox

Key Benefits

Classic Hearth
Embrace the timeless charm of a traditional fireplace, creating a warm and inviting focal point for gatherings and relaxation.

True to Life
Experience the epitome of realism with mesmerizing flames, pulsating logs, and cozy warmth.

Sustainable Solution
Merges sustainability and energy efficiency to deliver an environmentally conscious heating and design solution.

Tumbled glass

Rhythmic inner glow logs

Black shattered glass

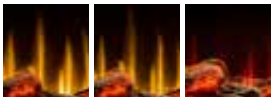

Same fireplace, simply choose 1 of 4 configurations.
Configurations 2-4 require convertible trim kit sold separately.

Front Left Right Bay

Dynamic-Fire Flame Effect
Witness a brand new, remarkably realistic flame effect, patented by Dimplex.

Rhythmic Inner Glow Logs
Features quick connect, moveable logs enhanced with inner glow technology that pulse in rhythm with the dancing flames.

Comfort$aver® Heating
On-demand supplemental heating for up to 1,000 sq ft. with the option to turn the heat off and enjoy the flames year-round.

Crackling Sound Effects
Enhance your sensory journey with the soothing sound of a crackling natural wood fire.

Total Control
Harness total control of your fireplace with the Dimplex Flame Connect App. You can also use the wall-mountable remote control or 3-button touch display.

5 YEAR LIMITED WARRANTY

ASP30 30" Electric Firebox	ASP36 36" Electric Firebox	ASP42 42" Electric Firebox	ASP48 48" Electric Firebox
Product Dimensions (WxHxD) 30-9/16 × 37-1/2 × 17-1/2 in 77.7 × 95.3 × 44.5 cm	Product Dimensions (WxHxD) 36-9/16 × 43-1/2 × 17-1/2 in 92.9 × 110.5 × 44.5 cm	Product Dimensions (WxHxD) 42-5/8 × 46-1/2 × 17-1/2 in 108.2 × 118.1 × 44.5 cm	Product Dimensions (WxHxD) 48-15/16 × 49-1/2 × 17-1/2 in 124.3 × 125.8 × 44.5 cm
Carton Dimensions (WxHxD) 38 × 44 × 23 in 96.5 × 111.8 × 58.4 cm	Carton Dimensions (WxHxD) 45 × 50 × 23 in 114.3 × 127.0 × 58.4 cm	Carton Dimensions (WxHxD) 51 × 52 × 23 in 129.5 × 132.1 × 58.4 cm	Carton Dimensions (WxHxD) 57 × 55 × 23 in 144.8 × 139.7 × 58.4 cm
Packaged Weight 92 lbs / 41.7 kg	Packaged Weight 98 lbs / 44.5 kg	Packaged Weight 104 lbs / 47.2 kg	Packaged Weight 110 lbs / 49.9 kg
UPC 781052152915	UPC 781052152922	UPC 781052152939	UPC 781052152946

© Dimplex All rights reserved. Material contained in this publication may not be reproduced in whole or in part, without prior permission in writing of Dimplex. Dimplex is a Registered Trade Mark in North America. All Dimplex flame effects are protected by multiple worldwide patents. All the products shown in this sell sheet are protected by intellectual property rights owned by Dimplex or members of the Glen Dimplex Group on an international basis. The Glen Dimplex Group of Companies will actively protect these rights. Specifications, finishes and dimensions are subject to change. Limited warranty. SE-689-R02-100424

Product Dimensions:

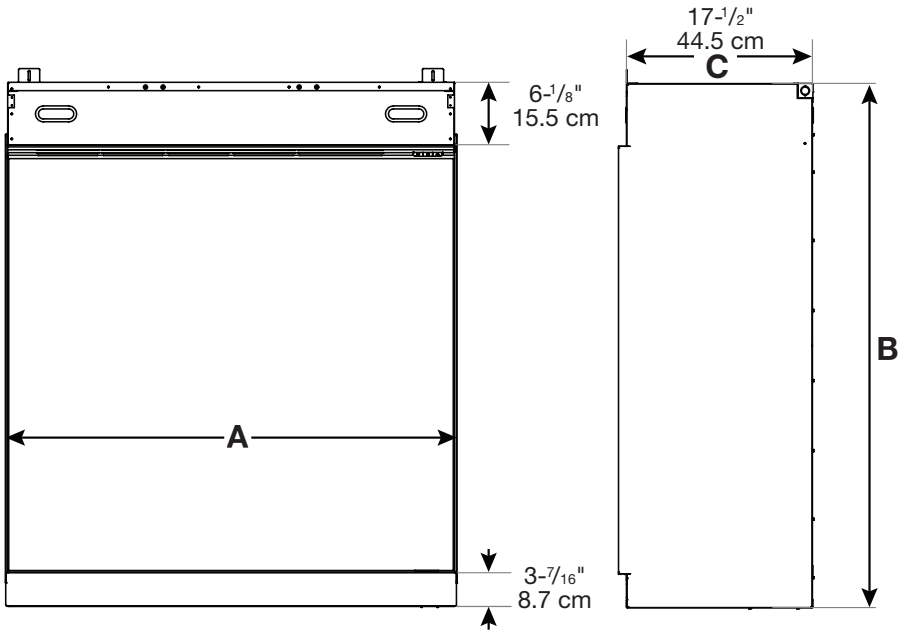

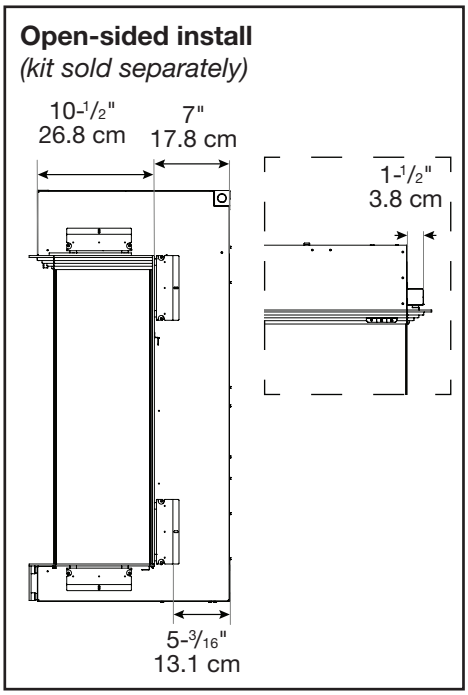

Product ASP30	**A** WIDTH (in/cm)	**B** HEIGHT with trim (in/cm)	**C** DEPTH (in/cm)	VIEWING DIMENSION - WxHxD (in/cm)
Front Install	30-9/16 (77.7)	37-1/2 (95.3)	17-1/2 (44.5)	30 x 28 x 9 (76.2 x 71.1 x 22.9)

Volts: 120 V (3-Wire) or 240 V (4-Wire)
Watts: 1500 W at 120 V, 2500 W at 240 V

BTUs/hr: 5118 | 8530
Amps: 12.5/10.4

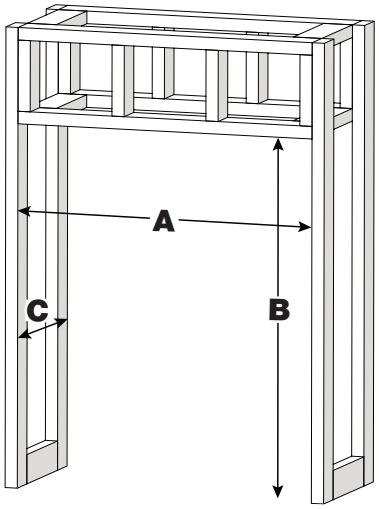

Framing Dimensions

Model	Width	Height	Depth
	A	**B**	**C**
ASP30	30-3/4" 78.2 cm	38" 96.6 cm	18" 45.8 cm
ASP36	36-3/4" 93.4 cm	44" 111.8 cm	
ASP42	42-3/4" 108.6 cm	47" 119.4 cm	
ASP48	48-3/4" 123.9 cm	50" 127 cm	

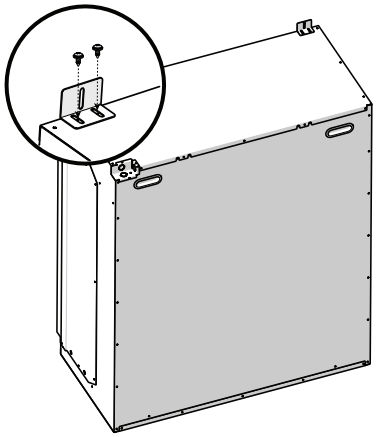

Prepare a wall with a framed opening, following the dimensions in the table.

Install the mounting brackets to the top of the firebox with the black screws provided.

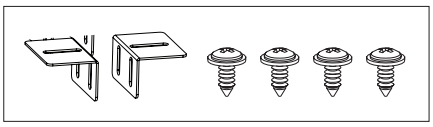

⚠ **CAUTION:** This fireplace is NOT load-bearing. Ensure the opening for the fireplace is framed in such a way that the weight of the building materials will not create pressure on the top of the fireplace.

! **NOTE:** Wiring connections are located at the back of the firebox, in the top right corner.

©2024 Glen Dimplex Americas | 3P-054-R00-082624