MONESSEN

Service Parts

AVFL72NIF, AVFL72PIF

Beginning Manufacturing Date: April 2026
Ending Manufacturing Date: Active

72” Artisan Vent Free Linear Fireplace

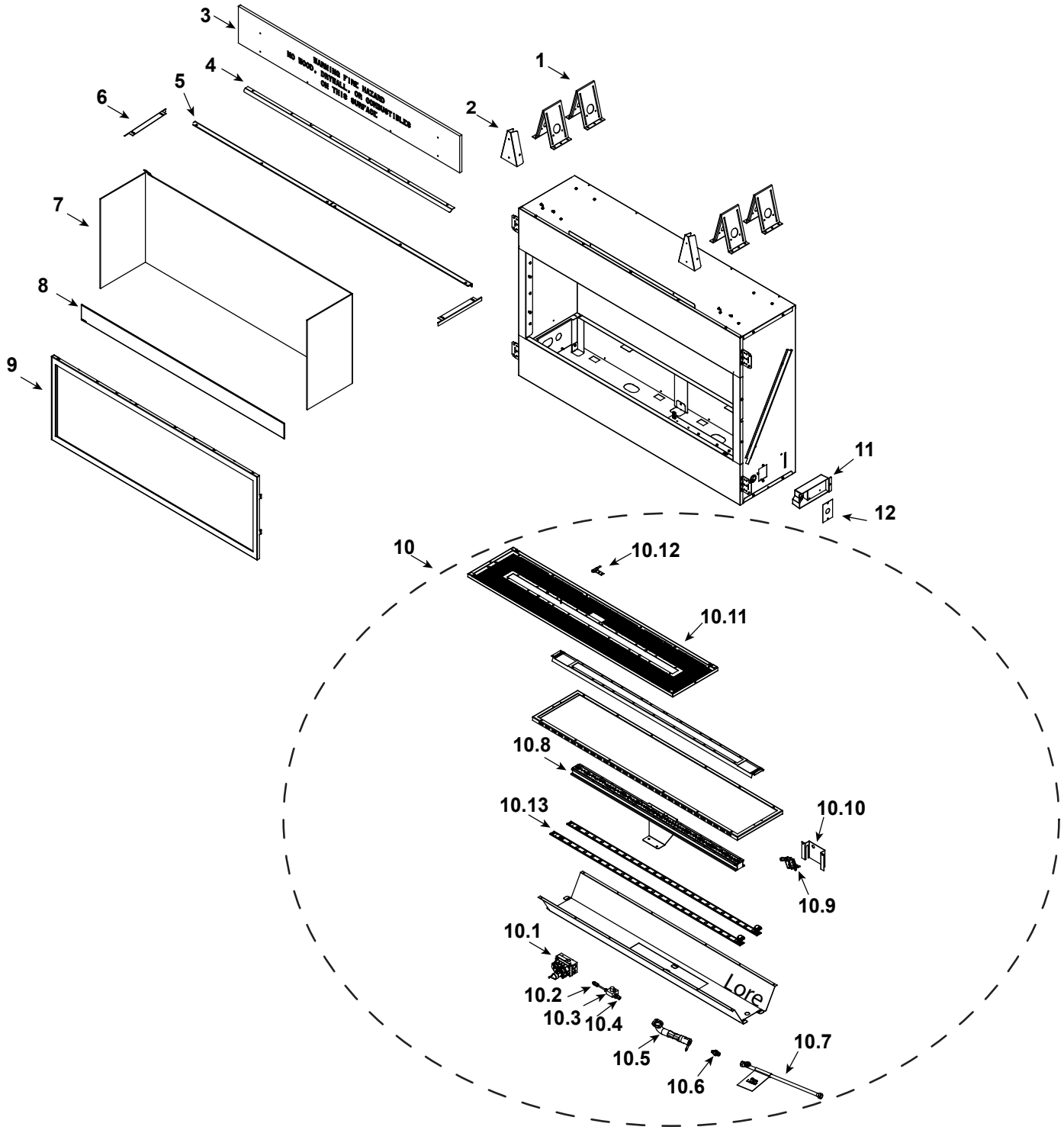

Part number list on following page.

MONESSEN **Service Parts**

AVFL72NIF, AVFL72PIF

Beginning Manufacturing Date: April 2026
Ending Manufacturing Date: Active

IMPORTANT: THIS IS DATED INFORMATION. Parts must be ordered from a dealer or distributor. **Hearth and Home Technologies does not sell directly to consumers.** Provide model number and serial number when requesting service parts from your dealer or distributor.

ITEM	DESCRIPTION	COMMENTS	PART NUMBER	Stocked at Depot
1	Top Standoff	Qty 4 Req	SRV11864	
2	Bracket	Qty 2 Req	SRV4099-198	
3	Non-Combustible Board		SRV4123-325	
4	Hood		SRV4123-135	
5	Panel Bracket (Back)	Qty 2 Req	SRV4123-195	
6	Panel Bracket (Sides)	Qty 2 Req	SRV4099-196	
7	Black Glass Assembly (Includes Back & 2 Sides)		SRV4123-025	**Y**
8	Deflection Glass		SRV4122-301	**Y**
9	Frame & Screen Assembly		SRV4123-029	**Y**
	Flex Line w/Shut-off		SRV69D0030	**Y**
10	Complete Service Engine	NG	SRV4123-017	
		LP	SRV4123-018	
10.1	Valve Assembly	NG	SRV4604-300	**Y**
		LP	SRV4604-301	**Y**
10.2	Tube, 3/16 Pilot **(Cut into 2 lengths, for regulator to valve & pilot to regulator)**		SRV20304115	**Y**
10.3	Pilot Regulator		SRV14D0469	**Y**
10.4	Fitting, 3/16 Tube x 1/8 NPT	Qty 2 Req	SRV20H0109	**Y**
	Venturi Gasket		SRV4099-191	**Y**
10.5	Venturi Assembly	NG	SRV4099-034	**Y**
		LP	SRV4099-033	**Y**
10.6	Orifice Flare .120 (#31) NG	NG	SRV4018-345	**Y**
	Orifice Flare .076 (#48) LP	LP	SRV4018-349	**Y**
10.7	Flex Gas Line, 16”		SRV4121-006	
10.8	Burner Assembly		SRV4101-021	**Y**
10.9	Pilot Assembly	NG	SRV26D2529	**Y**
		LP	SRV14D0476	**Y**
10.10	Pilot Shield		SRV4099-141	**Y**
10.11	Screen Cover	**No longer available**	SRV4123-109	
10.12	Pilot Carry Over		SRV4099-143	
10.13	LED Light Strip	Qty 2 Req	SRV4122-321	
	Piezo Wire Assembly		20303256K	**Y**
	Remote RC450		IFT2-RC450	
	Reset Switch		SRV2206-298	**Y**
	Reset Switch Bracket		SRV4099-138	
11	Junction Box		SRV4021-013	**Y**
12	Cover Plate		SRV4604-103	

Additional service part numbers appear on following page.

MONESSEN **Service Parts**

AVFL72NIF, AVFL72PIF

Beginning Manufacturing Date: April 2026
Ending Manufacturing Date: Active

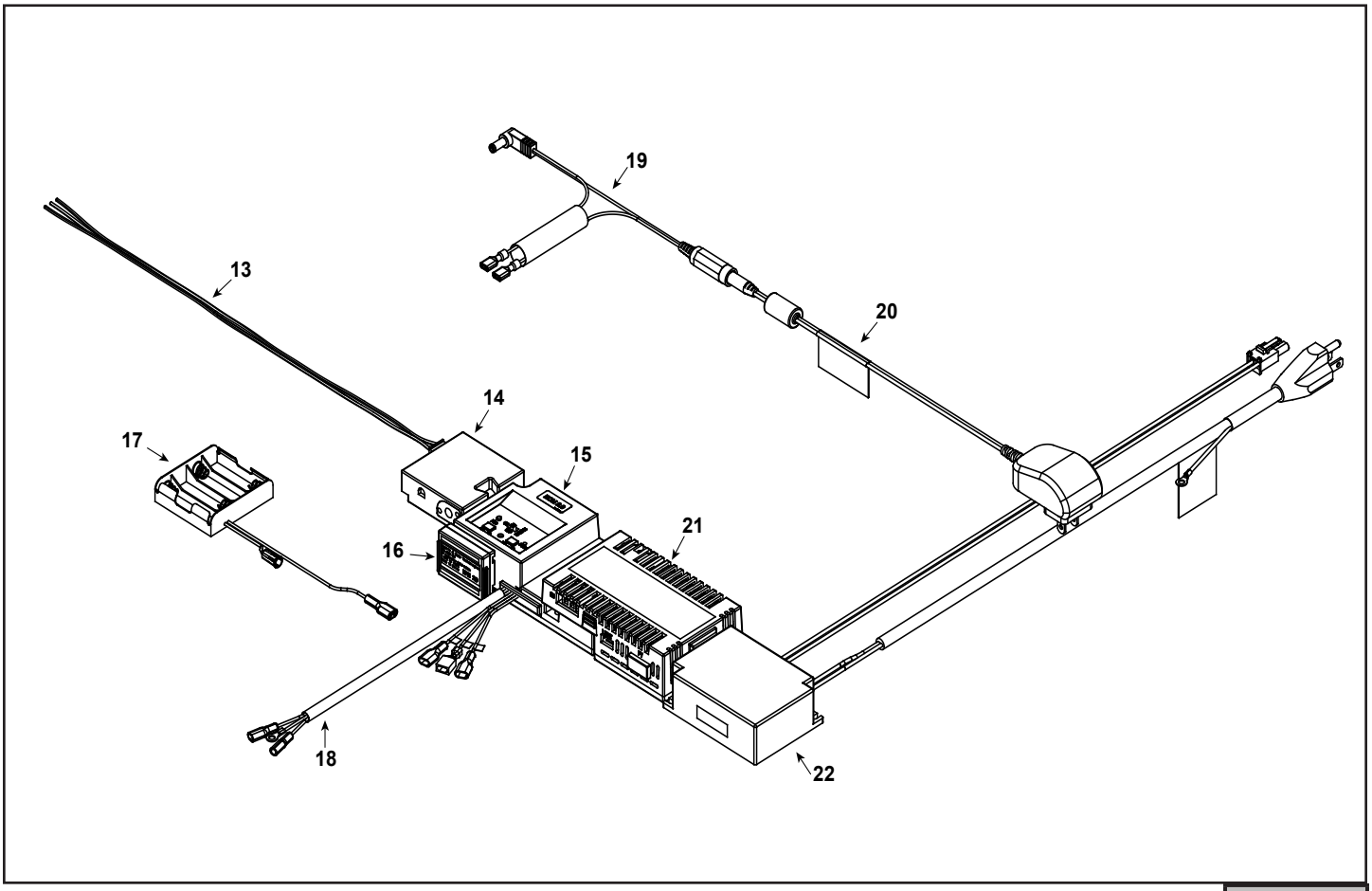

IMPORTANT: THIS IS DATED INFORMATION. Parts must be ordered from a dealer or distributor. **Hearth and Home Technologies does not sell directly to consumers.** Provide model number and serial number when requesting service parts from your dealer or distributor.

ITEM	DESCRIPTION	COMMENTS	PART NUMBER	Stocked at Depot
13	Wiring Harness, Thermocouple Module		SRV20301890	Y
14	Thermocopule Module		SRV4018-064	Y
15	Module, IFT2 Control		SRV2564-130	Y
16	Module, RF FCC		SRV2564-120	Y
17	Battery Holder 4AA, IFT		SRV2326-134	Y
18	Harness, IFT 6 Pin Wiring		SRV2326-132	Y
19	Reset Switch Wire		SRV2326-135	
20	Transformer, 6 Volt Wall		SRV2326-131	Y
21	US-ACM Module		SRV2564-150	
22	LED 12V Power Supply		2326-113	Y
	Wire Assembly		SRV4604-304	Y
	Harness, Light Bar		SRV4121-410	