ecosmart™ Fire

CLEARANCES AND INSTALLATION MANUAL

Please read these instructions completely before installing or operating the EcoSmart™ Fire.

HERITAGE FIREPLACE SERIES

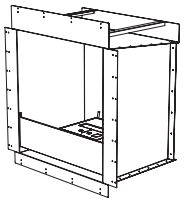

Heritage 26SS

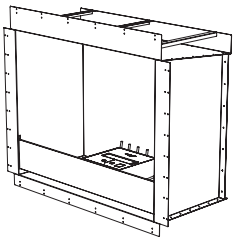

Heritage 42SS

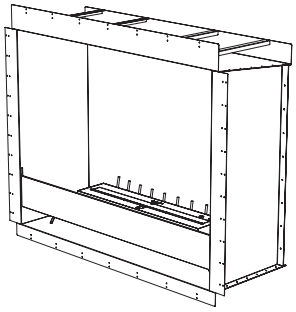

Heritage 56SS

e-nrg® natural . renewable . green

e-NRG bioethanol is the ONLY fuel to be used in this appliance.

! WARNINGS:

IF THE INFORMATION IN THIS MANUAL IS NOT FOLLOWED EXACTLY, A FIRE OR EXPLOSION MAY RESULT CAUSING PROPERTY DAMAGE, PERSONAL INJURY OR LOSS OF LIFE.

Do not fill while hot

Do not fill while operating

Do not overfill

Flammable

Use with supplied accessories

Keep away from children

Table of Contents

Appliance Clearances

SELECTING APPLIANCE LOCATION 2

VENTILATION 2

MINIMUM ROOM SIZE 2

Appliance Installation

FRAMING 3

BEFORE GETTING STARTED 4

INSTALLATION 5 - 7

FINISHING 8

MANTEL SURROUNDS 9

These appliances are manufacturer approved for use only with the accompanying UL Listed Burner/s.

OPERATION

Refer to the Operations Manual included with the Burner.

Appliance Clearances

Please read these instructions completely before installing and operating the EcoSmart™ Fire.

SELECTING APPLIANCE LOCATION

The appliance is zero clearance and has the necessary clearances to combustible frame components already built-in. They are engineered specifically to accept compatible EcoSmart Fire Burners.

When selecting a location for the appliance it is important to consider the required minimum room sizes and clearances to walls and combustible materials (see Clearances images below and Minimum Room Size table).

Note: Heritage appliances are made from zinc sealed steel which is powder coated with super hi-temp black paint which prevents rusting. The burners are made of 304 stainless steel. To ensure the burner(s) continue looking great and to avoid rust or corrosion it is important any contamination or debris are cleaned or removed from the burner immediately.

If installed outdoors, the appliance must be located under a protective overhang to avoid it from filling with water and being permanently damaged. The warranty is void if the product is damaged as a result of installation in an exposed location.

When not in use, keep the burner lid closed to safeguard the burner from debris falling into the burner chamber and causing contamination.

WARNING: Risk of Fire or Burns! Provide adequate clearance around air openings and for service access. Observe the clearances to combustibles recommended in this manual and the burner manual. Ensure that your fire is positioned away from flammable materials and other sources of ignition at all times. Due to high temperatures, the appliance should be located out of traffic and away from furniture and draperies. Pay very close attention to positioning the fire away from items that may move as a result of wind and drafts. For example trees/branches/curtains/paper and the like. Keep children at a safe distance at all times and never leave them unsupervised when the appliance is on or hot.

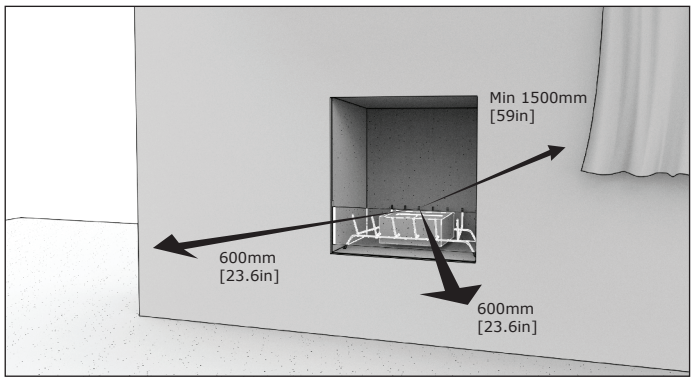

Indoor Clearances

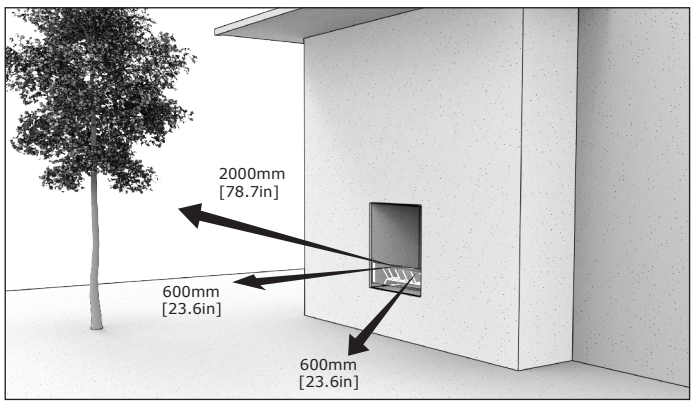

Outdoor Clearances (Need overhang or "roof extension" above the fireplace to ensure rain will not enter the firebox. Check with local building codes regarding requirements for overhangs / roof extensions.)

VENTILATION

EcoSmart Fires do not require any form of permanent fixture or fitting, such as a flue for ventilation, a permanent connection or any kind of fixed utility for fuel supply.

Do not cover any existing ventilation systems or structures that are built or installed within the chosen installation area.

To ensure adequate ventilation, make sure to follow the guidelines in the table shown.

Underwriters Laboratories (UL) calculates adequate air exchange as follows:

In a house of typical construction, that is, one that is not of unusually tight construction due to heavy insulation and tight seals against air infiltration, an adequate supply of air for combustion and ventilation is provided through infiltration. However, if the Burner is used in a small room where less than ***5.7m³ [200ft³]*** of air space is provided for each ***1,000 BTU*** per hour of appliance rating (considering the maximum Burner setting), the door(s) to adjacent room(s) should be kept open or a window to the outside should be opened at least ***25.4mm [1in]*** to guard against potential build up of indoor air pollution. Do not install or operate in a bathroom or any other small room.

MINIMUM ROOM SIZE

Ventilation table based on number of burners (per appliance).

Appliance	Burner/s	Minimum Room Size	BTU
Heritage 26SS	1x BK5	2,472 cubic feet (70 cu. meters)	13,000
Heritage 42SS	1x BK5	2,472 cubic feet (70 cu. meters)	13,000
Heritage 56SS	1x XL900	3,884 cubic feet (110 cu. meters)	15,000

NOT INTENDED FOR USE AS A PRIMARY HEAT SOURCE.
This appliance is tested and approved as either a supplemental room heat or as a decorative appliances. It should not be factored as primary heat in residential heating calculations.

© Copyright 2004 - 2025 MAD Design Group. All rights reserved. V2502

Appliance Installation

These appliances must be installed into a fixed secure position before being operated.

NOTICE: DO NOT INSTALL DIRECTLY BESIDE OR NEAR WALLPAPER, LAMINATE, VENEER OR ANY SURFACE THAT IS NOT DESIGNED TO WITHSTAND HEAT AND HIGH TEMPERATURES (the heat will impact the material, and in some circumstances the glue used for its application). THE AREA AROUND THE APPLIANCE GETS HOT. HEAT SENSITIVE/REACTIVE MATERIALS SHOULD NOT BE USED. DO NOT PLACE FLAMMABLE OBJECTS ON OR AROUND THE APPARATUS.

These appliances are not designed to incorporate doors or opening covers.

The appliance must remain open at all times for ventilation – it is not designed to operate as an oven or similar “hot box” – the flame must have a constant supply of air to operate and be able to circulate and distribute the heat effectively

DO NOT PACK REQUIRED AIR SPACES (the space between the appliance and the spacer) WITH INSULATION OR OTHER MATERIALS. THE AIR SPACERS ARE NEEDED TO ENSURE PROPER TEMPERATURES ARE MAINTAINED BEHIND THE APPLIANCE.

Do not modify the appliance in any way during installation. Cutting of sheet metal parts of the appliance is prohibited.

Expansion and contraction of internal parts due to heating and cooling off may create noise. This is normal.

WARNING: DO NOT OPERATE WITHOUT THE GLASS WINDSCREEN

The appliance must be fully assembled before being operated. Failure to install (or removal of) glass panels will void the warranty and render the product unapproved for use with the included burner.

FRAMING

Important Considerations for Framing

1. The appliance must be installed on a level surface capable of supporting the appliance, burner, glass charcoal and full fuel capacity.

2. The framing dimensions shown in the instructions are the optimum dimensions that allow best fit with gyprock / sheetrock / plasterboard (or other facing/finishing material) after the appliance has been installed.

3. Prepare the installation location. If placing the appliance on a platform, build the platform, making sure to accommodate the weight of the appliance, burner, glass charcoal and fuel. Verify that the platform is level.

   In the case of insufficient capacity to hold the weight of the appliance, measures must be taken to reinforce the setting (for example installation of a plate for load distribution) so that the setting is suitable for installation.

   IMPORTANT: The framing above the appliance must be self-supporting. The appliance is not load-bearing.

DEFINITIONS

Combustible materials - Materials made of or surfaced with wood, compressed paper, plant fibers, plastics, or other material that can ignite and burn, whether flame produced or not, or plastered or un-plastered shall be considered combustible materials.

Non-combustible materials - materials which will not ignite and burn. Such materials are those consisting entirely of steel, iron, brick, tile, concrete, slate, glass or plasters, or any combination thereof. HardieBacker®, WonderBoard®, Durock® or materials that are reported as passing ASTM E 136, Standard Test Method for Behavior of Materials in a Vertical Tube Furnace at 750C shall be considered non-combustible materials.

NOTE: Illustrations reflect typical installations and are for DESIGN PURPOSES ONLY. Illustrations/diagrams are not drawn to scale. Actual installation may vary due to individual design preferences.

Appliance Installation

BEFORE GETTING STARTED

1. Carefully remove the appliance and components from the packaging
2. Inspect and report any parts damaged in shipment, particularly the condition of the glass windscreen.
3. Read all of the instructions before starting the installation. Follow these instructions carefully during the installation to ensure maximum safety and benefit.

WARNING: Risk of fire or explosion! Damaged parts could impair safe operation. Do not install damaged, incomplete or substitute components.

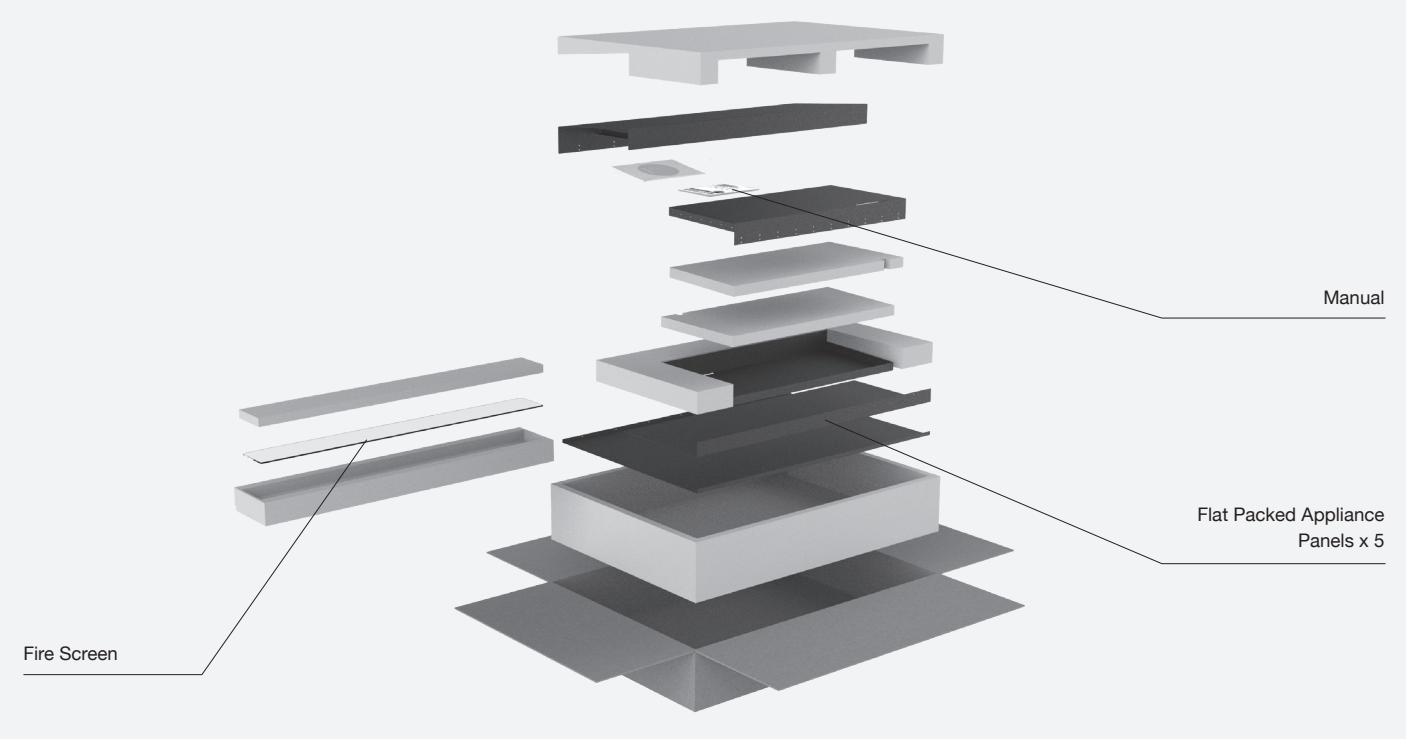

Appliance Carton

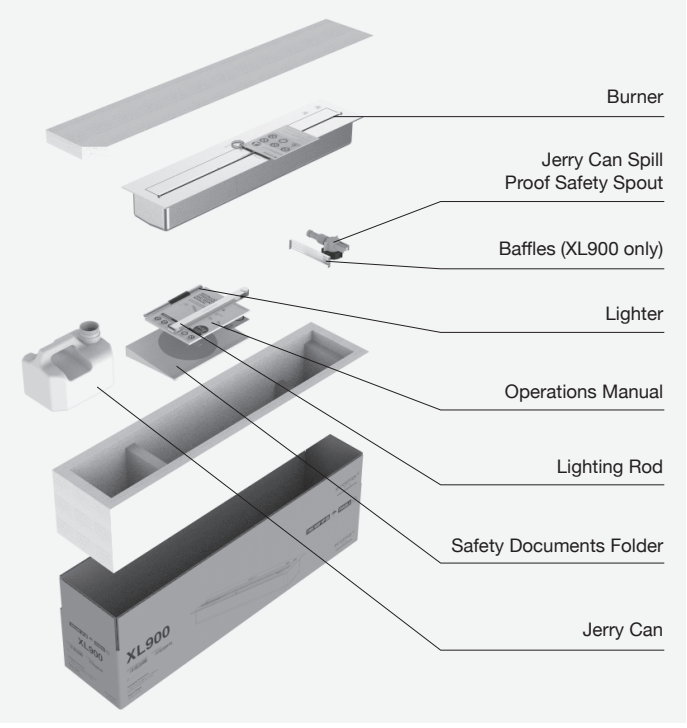

Burner Carton

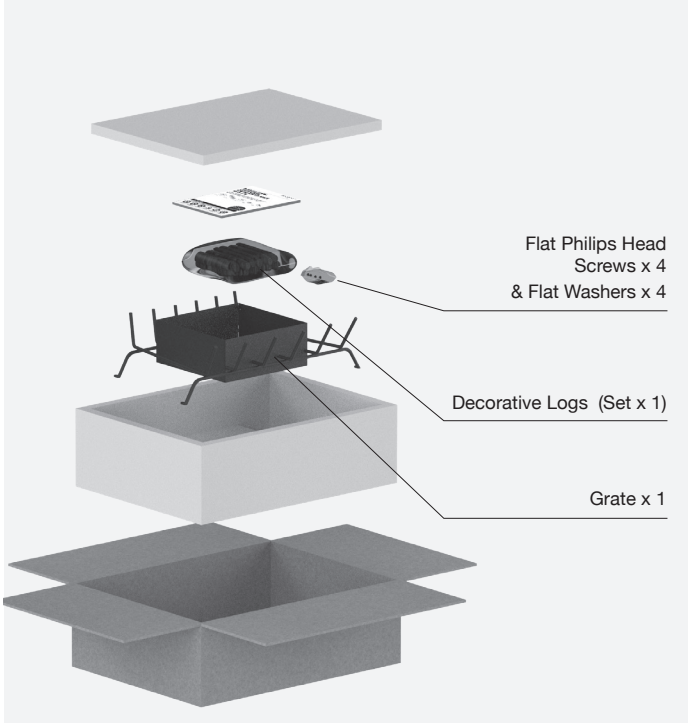

Grate Carton

© Copyright 2004 - 2025 MAD Design Group. All rights reserved. V2502

Appliance Installation

Equipment required: *Power Drill, Screwdriver, Level, Hand Trowel for Plaster, Silicone Gun, Caulk Gun*

1. Construct the main wall framework with the opening size shown in Table A. The base of the frame can be a solid bench/platform, which will assist in leveling up the appliance when in position.

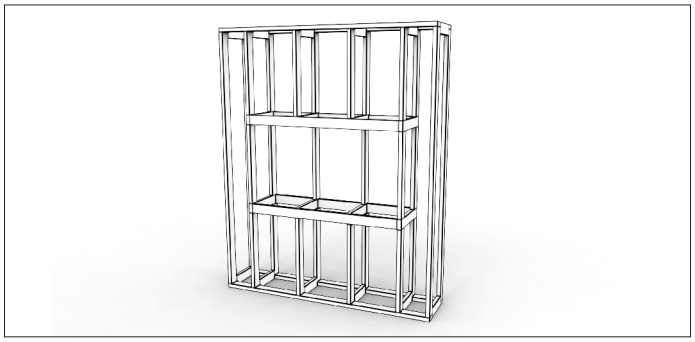

Optional built-in styles shown below. Please make sure the bottom of the firebox is fully supported by framing if you install the appliance partially recessed or flush with the wall.

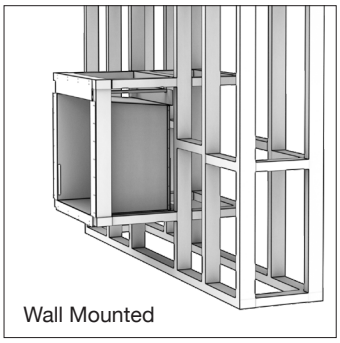

Wall Mounted

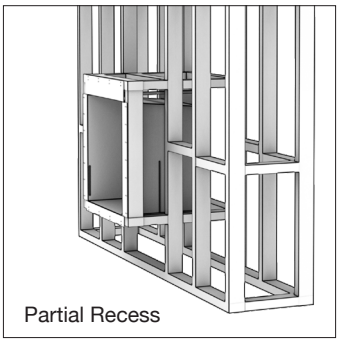

Partial Recess

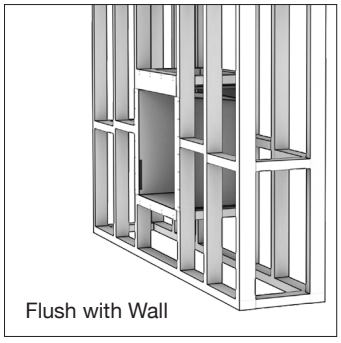

Flush with Wall

Table A: Framework Opening Sizes

Physical appliance dimensions should be verified against cut out dimensions BEFORE installation begins to confirm tolerances align.

APPLIANCE	Width mm [in]	Min. Depth mm [in]	Height mm [in]	Weight* kg [lbs]
Heritage 26SS	775 [30.0]	585 [23.0]	775 [30.5]	45 [99.0]
Heritage 42SS	1,170 [46.0]	585 [23.0]	930 [36.5]	57.4 [126.3]
Heritage 56SS	1,525 [60.0]	585 [23.0]	1,145 [45.0]	84.3 [185.5]

* Approximate only. Appliance weight includes burner/s (dry weight excluding fuel), and glass.

IMPORTANT: The framing above the appliance must be self-supporting. The appliance is not load-bearing.

2. Install either of the side panels, be sure to secure all screw positions on the firebox.

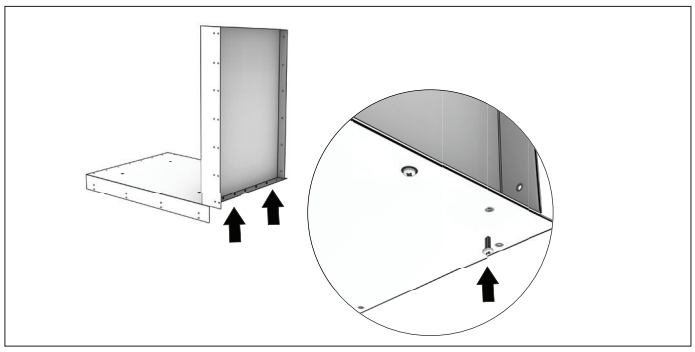

3. Repeat the process for the opposite side panel.

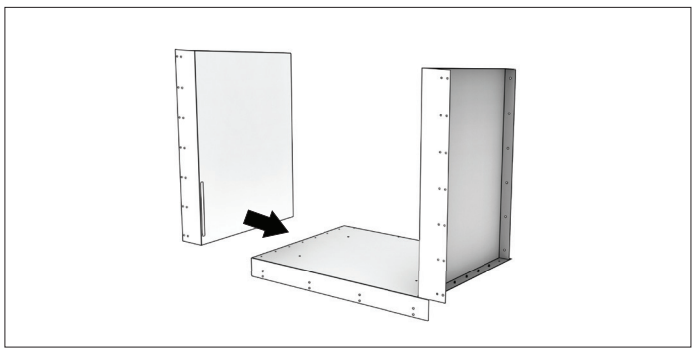

4. Install the top panel.

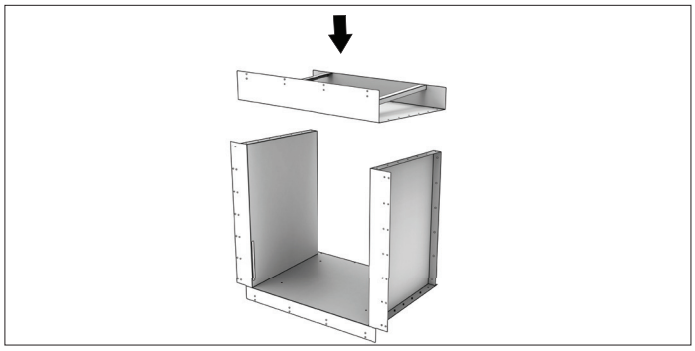

5. Install the back panel.

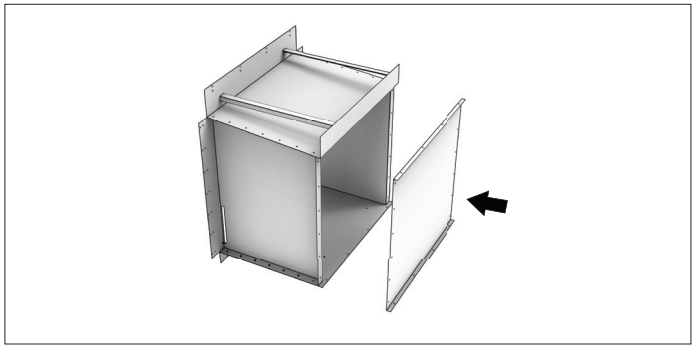

Appliance Installation

6. Insert the firebox into its designated cavity/built wall area.

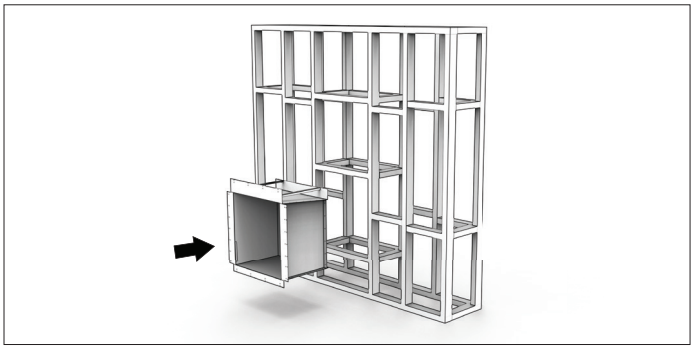

7. Secure the appliance to the framework with screws using the existing mounting holes on the appliance flanges. Make sure that the appliance is level before securing it in place.

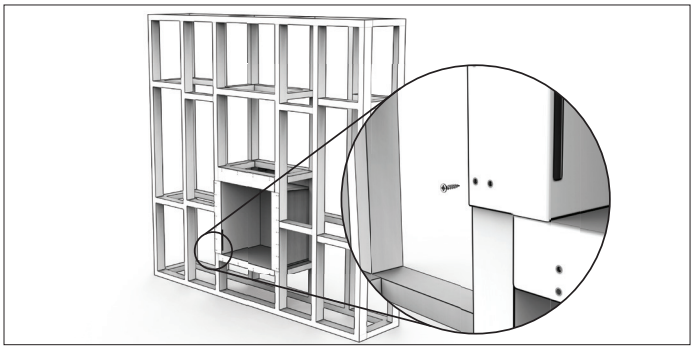

8. Typical drywall isntallation; sheet the wall faces once the Firebox is secured into position.

   Complete the construction by finishing the wall paneling around the appliance. (See section on **FINISHING INSTRUCTIONS** and ensure that you fully understand where non combustible materials must be used.)

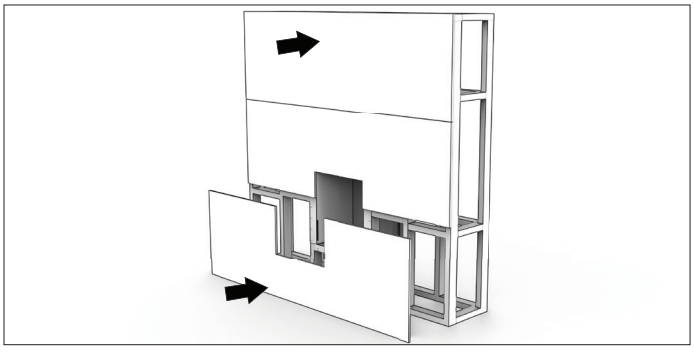

9. Insert the grate. Align the four legs of the grate with factory points in the firebox. Secure the grate using the provided screws with a philips head screw driver.

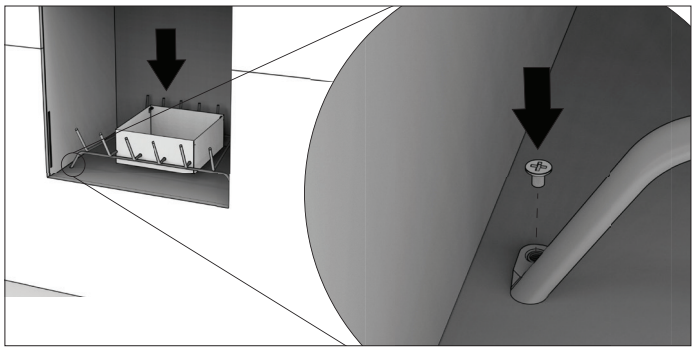

10. Insert the burner into the grate.

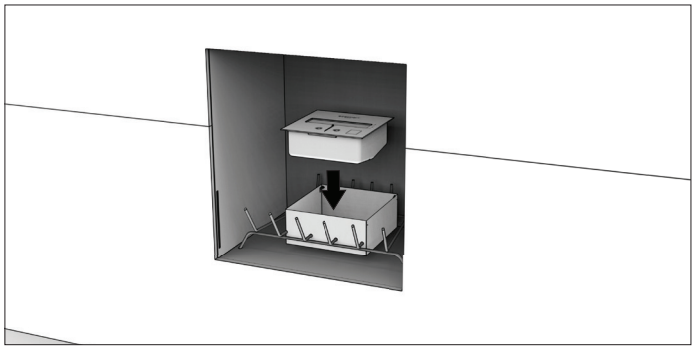

11. Carefully insert one side of the glass screen into the slots.

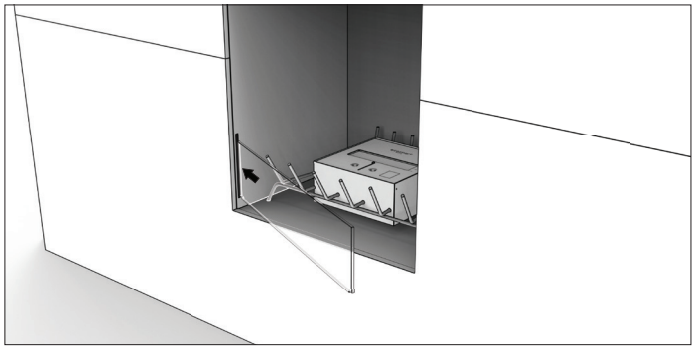

© Copyright 2004 - 2025 MAD Design Group. All rights reserved. V2502

Appliance Installation

12. Push the glass screen further into the slot enough to align the screen with the opposite end slot.

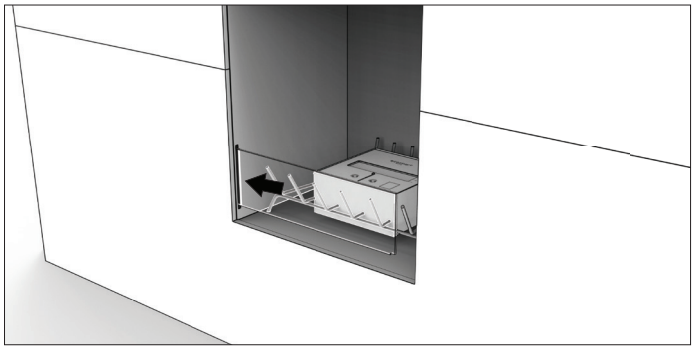

13. Gently slot the glass screen end and push the glass screen down until it falls into location carefully (while holding the glass, check that it is in position by trying to shift the glass left and right).

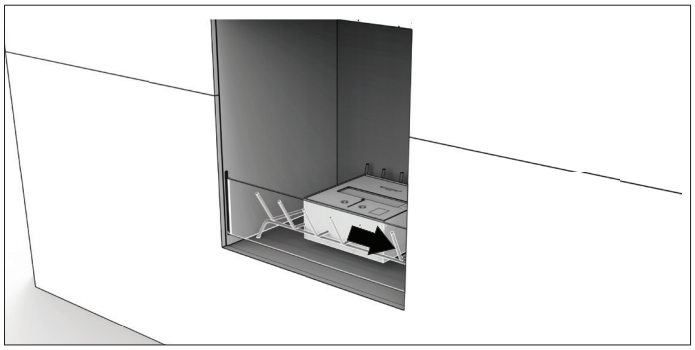

14. Install the ceramic decorative logs around the burner. Do not place ontop of the burner.

    Do not place real timber or any combustible decorative media in the appliance.

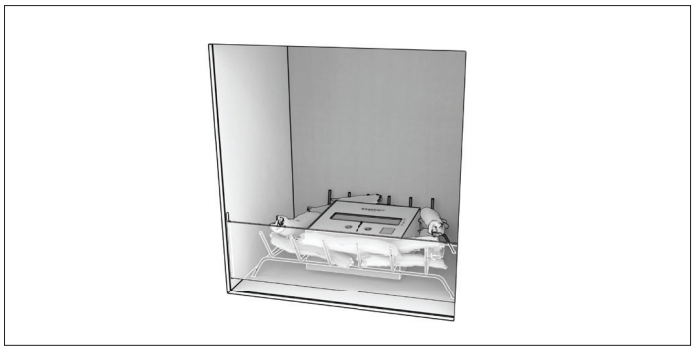

Finishing

1. Apply surrounding wall panels. Acceptable materials include fibre cement board, fire-rated medium density fibreboard (FR MDF), stone, tiles, steel, and fire-rated (FR) plasterboard.

   Facing or finishing materials must never overhang into the appliance opening.

   WARNING! Risk of Fire! Do not apply combustible materials beyond the minimum clearances. Comply with all minimum clearances to combustibles as specified in this manual and the burner manual.

2. **The Following steps are option based on installation type.**

   A metal trim bead can be installed on all edges (mitre the corners) to improve appearance on rough and/or unfinished edges but is not a requirement. (Do not use long fasteners thicker than the wall paneling material to avoid penetrating the appliance).

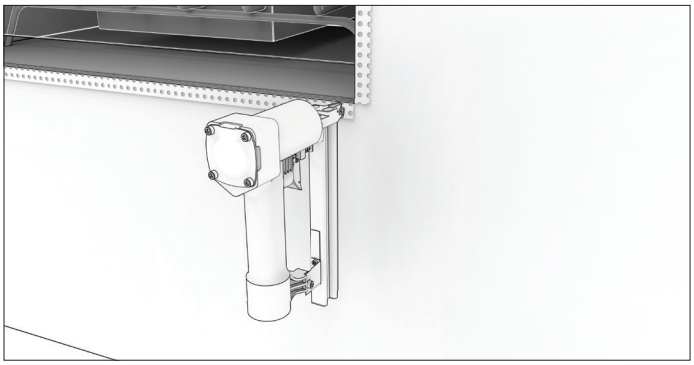

3. Plaster all seams and beads.

   All joints between the finished wall sheathing and the front of the appliance must be sealed with non-combustible materials. Sealants, such as caulk or mastic used to seal the gap between the wall and the appliance, should be rated at a minimum continuous exposure to 50ºC (122ºF).

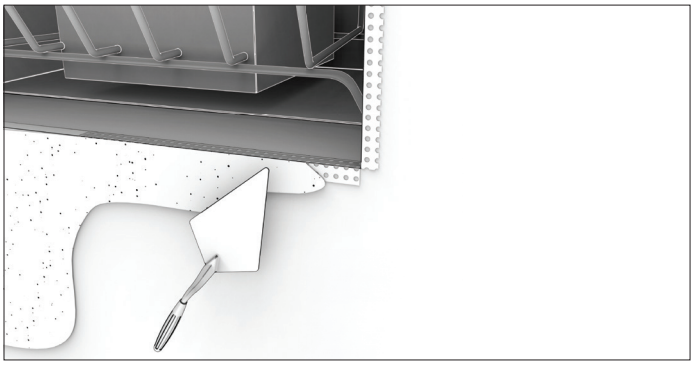

4. If desired finishing includes a painted wall, 100% acrylic latex or oil-based or standard acrylics may be used. Follow paint manufacturer's instructions for paint and primer application.

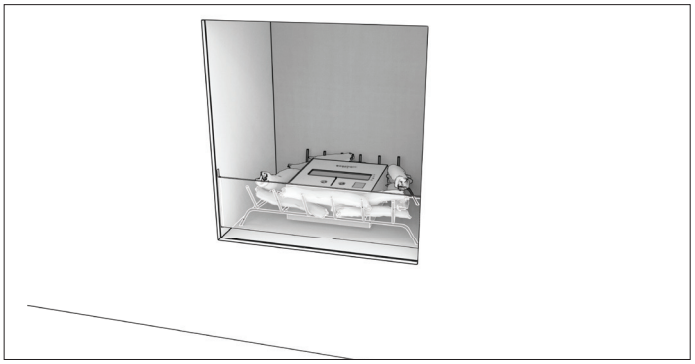

OPERATE ACCORDING TO THE BURNER OPERATIONS MANUAL INCLUDED WITH THE BURNER.

© Copyright 2004 - 2025 MAD Design Group. All rights reserved. V2502

Mantel Surrounds

Minimum Clearances

If the setting incorporates a mantel the minimum vertical and maximum horizontal dimensions to combustible mantel identified in the image below must be followed.

Finishing and clearances to COMBUSTIBLE AND NON-COMBUSTIBLE MATERIALS.

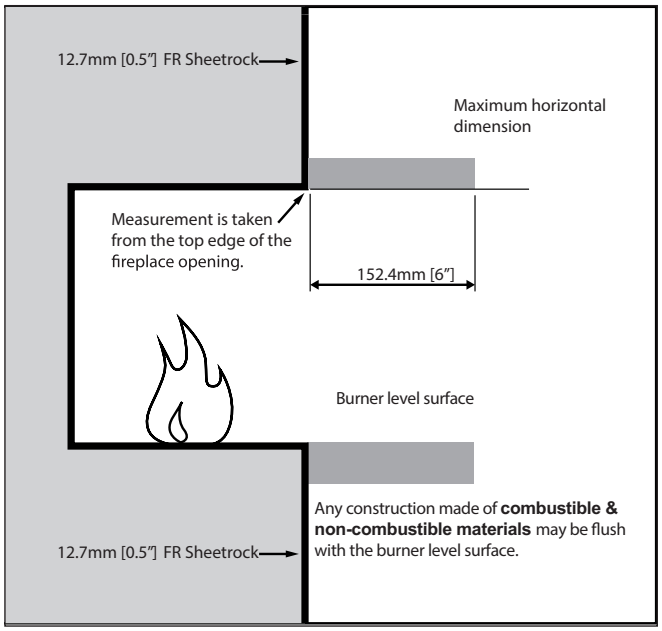

Warning! Risk of Fire! Comply with all minimum clearances to combustibles as specified. Framing or finishing material closer than the minimum listed must be constructed entirely of non-combustible materials.

© Copyright 2004 - 2025 MAD Design Group. All rights reserved. V2502

MAD Design Group
Tel: +61 2 9997 3050
Email: info@maddesigngroup.com

V2502