Dimplex®

Experience Better Living.

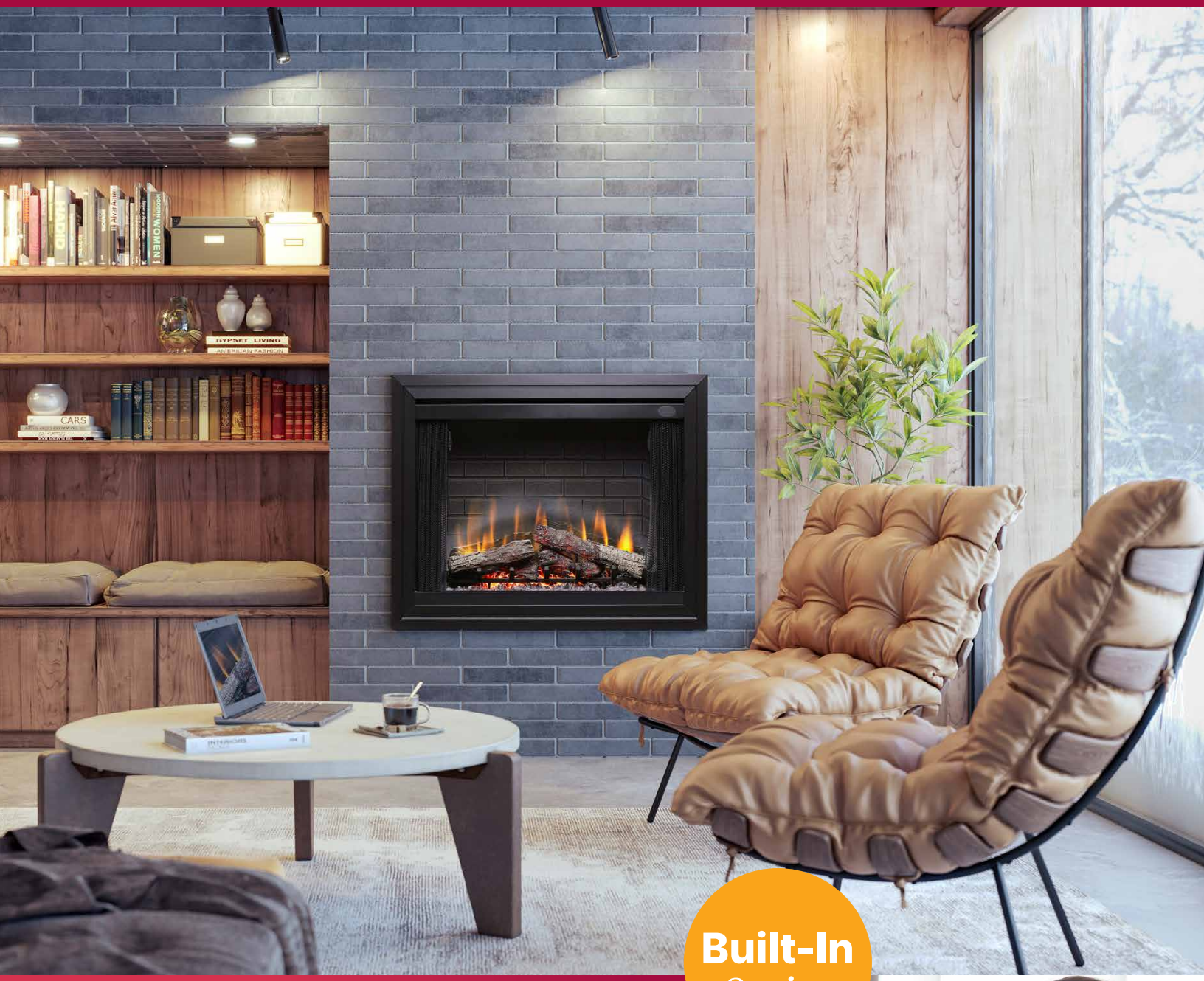

Built-In
Series

Built-in Fireplace

Classic fireplace charm.

Built-in Fireplace

Electric Firebox

Dimplex®

Experience Better Living.

Key Benefits

Classic Elegance

The fireplace heating and design elements work together to provide a welcoming environment.

Traditional Design

The full brick interior brings the warmth and comfort of a traditional fireplace into your home.

Intuitive Operation

Simple-to-use controls ensure a hassle-free and enjoyable fireplace experience.

Dimplex Flame Effect
A blend of technology, artistry and craftsmanship that sets the standard for realism.

Powerful Heating
Powerful fan-forced heater provides on-demand heat up to 1,000 square feet.

Realistic Logs
Logs molded from actual wood glow in concert with the flames to create a realistic fireplace experience.

All-Season Flames
Enjoy the ambience of flames 365 days a year, without using the heater.

BFSL33

BF33DXP

BF39STP

BF39DXP

BF45DXP

Three-stage Remote:
Enjoy flames with half-heat, full-heat or flames only. Remote sold separately (Included with the BFSL33).

Scan for more information on dimensions, accessories, and technical details.

2 YEAR LIMITED WARRANTY

Model Number	Description
BFSL33	33" Slim Line Electric Firebox, with trim kit
BF33DXP	33" Deluxe Built-in Electric Firebox
BF39STP	39" Standard Built-in Electric Firebox
BF39DXP	39" Deluxe Built-in Electric Firebox
BF45DXP	45" Deluxe Built-in Electric Firebox

© Dimplex All rights reserved. Material contained in this publication may not be reproduced in whole or in part, without prior permission in writing of Dimplex. Dimplex is a Registered Trade Mark in North America. All Dimplex flame effects are protected by multiple worldwide patents. All the products shown in this sell sheet are protected by intellectual property rights owned by Dimplex or members of the Glen Dimplex Group on an international basis. The Glen Dimplex Group of Companies will actively protect these rights. Specifications, finishes and dimensions are subject to change. Limited warranty. SE-687-R01-112323

Order No.	**X-BF39DXP**
Model No.	**BF39DXP**

Notes:

Section 10309 - Manufactured Electric Fireplaces

PART 1 GENERAL

1.1 SECTION INCLUDES

A. Manufactured electric fireplaces.
B. Accessories

1.2 RELATED SECTIONS

A. Section 06100 - Rough Carpentry: Wood framed rough opening and enclosure.

1.3 REFERENCES

A. UL - 2021
B. CSA - C22.2 No. 46-13

1.4 SUBMITTALS

A. Submit under provisions of Section 01300.
B. Product Data: Manufacturer's data sheets on each product to be used, including:
   1. Preparation instructions and recommendations.
   2. Storage and handling requirements and recommendations.
   3. Installation methods.
C. Manufacturer's Certificates: Certify products meet or exceed specified requirements.
D. Manufacturer's warranty.

1.5 DELIVERY, STORAGE, AND HANDLING

A. Store products in manufacturer's unopened packaging until ready for installation.
B. Protect materials from exposure to moisture. Do not deliver until after wet work is complete and dry.

1.6 WARRANTY

A. Provide the manufacturer's 2-year limited warranty on electrical components.

PART 2 PRODUCTS

2.1 ACCEPTABLE MANUFACTURERS

A. Pre-fabricated Electric Fireplace:
   1. Base: Dimplex Electric Fireplace
      Glen Dimplex Americas
      1367 Industrial Road
      Cambridge ON N3H 4W3
      1-888-346-7539
      www.dimplex.com
   2. Substitutions not permitted
   3. Requests for substitutions will be considered in accordance with provisions of Section 01600.

Order No.	**X-BF39DXP**
Model No.	**BF39DXP**

Notes:

Section 10309 - Manufactured Electric Fireplaces

2.2 ELECTRIC FIREPLACES

A. General:

1. Provide all components and accessories required for a complete, functional unit.
2. UL or CSA listed.

B. Pre-fabricated Electric Fireplace:

1. Base Product:
   a) Dimplex Electric Fireplace
   b) Material Number: X-BF39DXP (Model: BF39DXP)

2. Description: Realistic 39" Direct-wire Electric Firebox

3. Dimensions:
   a) Width: 38-3/4" / 98.4 cm
   b) Height: 32-3/4" / 83.2 cm
   c) Depth: 15-1/4" / 38.7 cm
   c) Height at back: 30-1/8" / 76.5 cm

4. Framing Dimensions:
   a) Width: 39-1/2" / 100.3 cm
   b) Height: 33-1/2" / 85.1 cm
   c) Depth: 16" / 40.6 cm

5. Electrical:
   a) Volts: 120 / 240 / 208
   b) Watts: 1,440 / 2,700 / 2,100
   c) BTUs: 5,000 / 9,200 / 7,200
   d) Amps: 12.0 / 11.3 / 10.1

6. Venting: Non-venting

7. Operation: Flame only, flame and heat

8. Heating: Louver-less, fan-forced circulation

9. Liner: Steel

10. Standard features:
    a) Flame/ember bed on/off
    b) Direct wire 120V or 240V
    c) 3D flame effect with mirrored rear glass
    d) On-demand fan-forced heater
    e) Operable mesh spark screens
    f) Cast urethane, inner-glow logs and pulsing ember bed

Order No.	**X-BF39DXP**
Model No.	**BF39DXP**

Notes:

Section 10309 - Manufactured Electric Fireplaces

11. Control options:
    a) 3-stage remote control (flame, flame and half-heat, flame and full-heat)
    b) Wall switch remote control kit
    c) Wall-mount thermostat

12. Optional:
    a) Tamper-proof glass door BFGLASS39BLK
    b) Bi-fold look glass door BFDOOR39BLKSM
    c) Swing glass door BFSDOOR39BLK
    d) Trim kit: 3" black surround trim BF4TRIM39
    e) 110/120V plug kit with 7 ft. cord BFPLUGE

PART 3 EXECUTION

3.1 INSPECTION

A. Do not begin installation until substrates have been properly prepared.
B. If substrate preparation is the responsibility of another installer, notify Architect of unsatisfactory preparation before proceeding.
C. Verify proper power supply and fuel source are available.

3.2 PREPARATION

A. Clean surfaces thoroughly prior to installation.
B. Prepare surfaces using the methods recommended by the manufacturer for achieving the best result for the substrate under the project conditions.

3.3 INSTALLATION

A. Install in accordance with manufacturer's instructions and requirements of authorities having jurisdiction.
B. Use manufacturer's guidelines for minimum clearances to combustibles, walls, and finishes.
C. Anchor all components firmly in position for long life under hard use.
D. Upon completion of installation, visually inspect all exposed surfaces. Touch up scratches and abrasions with touch up paint recommended by the manufacturer; make imperfections invisible to the unaided eye from a distance of 5 feet (1.5 m).

3.4 PROTECTION

A. Protect installed products until completion of project.
B. Touch-up, repair or replace damaged products before Substantial Completion.

END OF SECTION

Order No.	**X-BF39DXP**
Model No.	**BF39DXP**

Notes:

Section 10309 - Manufactured Electric Fireplaces

Framing Dimensions:

110/120V	A	B -0 / +0.1	C -0 / +0.1	D	E	F	G	H	I	J	K	L
BF45DXP	16.0" (40.5cm)	45.0" (114.3cm)	32.9" (83.6cm)	30.1" (76.5cm)	15.3" (38.9cm)	42.0" (106.7cm)	44.7" (113.5cm)	22.8" (57.9cm)	32.7" (83.1cm)	60.0" (152.4cm)	42.0" (106.7cm)	42.0" (106.7cm)
BF39STP/DXP	16.0" (40.5cm)	39" (99.1cm)	32.9" (83.6cm)	30.1" (76.5cm)	15.3" (38.9cm)	36.0" (91.4cm)	38.7" (98.3cm)	22.8" (57.9cm)	32.7" (83.1cm)	54.0" (137.2cm)	38.0" (96.5cm)	38.0" (96.5cm)
BF33STP/DXP	15.0" (38.1cm)	33.1" (84.1cm)	28.7" (72.9cm)	25.7" (65.3cm)	14.3" (36.3cm)	29.6" (75.2cm)	32.8" (83.3cm)	18.8" (47.8cm)	28.5" (72.4cm)	48.0" (121.9cm)	34.0" (86.4cm)	34.0" (86.4cm)

Figure 1

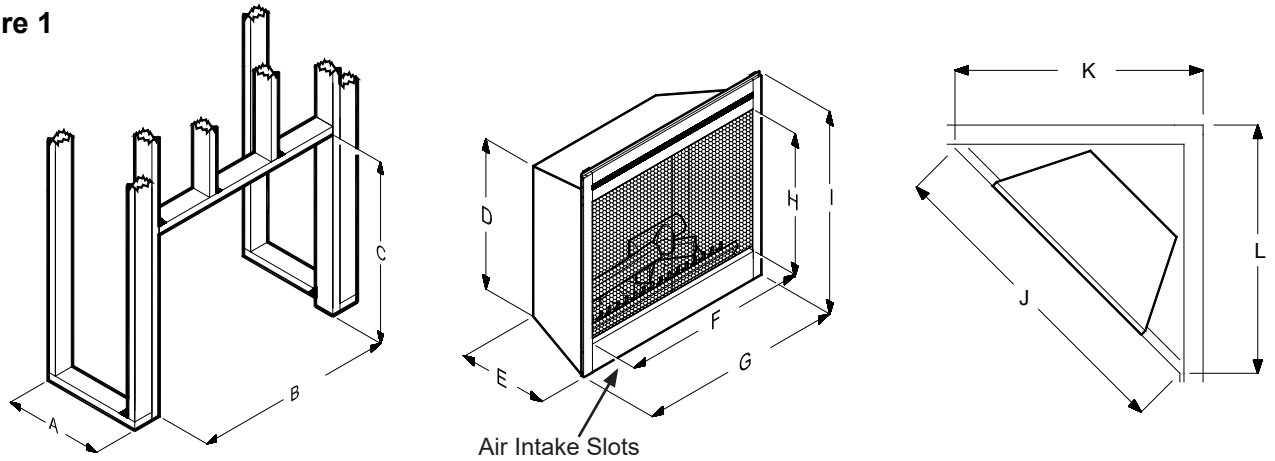

Rough-In Framing Dimensions **Firebox Dimensions** **Rough-In Corner Framing**

This fireplace is a zero clearance design, with the exception of the top of the unit, where any insulation and vapor barrier should be placed a minimum of 2" (5.1 cm) from the unit. No combustibles can be placed on the top surface of the fireplace.

⚠ **CAUTION**: Ensure installation does not allow fireplace to be in direct contact with building vapor barrier or insulation and meets all local building code.

Four mounting flanges on the sides of the unit are provided to facilitate installation. There are two mounting flanges located on each side of the fireplace insert.
From the inside of the unit, bend tabs outward and mount to the inside of the framing using suitable hardware.

Figure 2

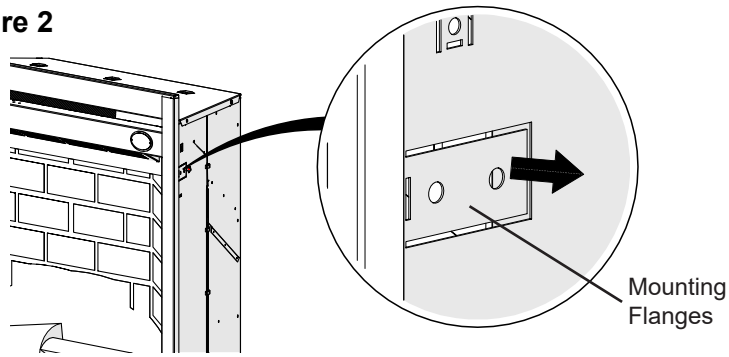

Scan for more information on dimensions, accessories, technical details.

To view full series visit:
dimplex.com

1-800-668-6663

©2023 Glen Dimplex Americas | 3P-045-R01-101323