AMERICAN MADE GRILLS

ATLAS USER MANUAL

PROUDLY MADE IN THE USA

PFS C US

PFS #20-026

ATLAS INSTALLATION INSTRUCTIONS & OWNER'S MANUAL

NAME: **36″ ATLAS GRILL**
PART #: **ATS36**

Natural gas & liquid propane configurations

THANK YOU

Thank you for your purchase. We'd like to welcome you to the American Made Grills family of luxury outdoor kitchen products and look forward to being a part your home for years to come. As a family business with over 20 years of industry experience, we aim to deliver exceptional quality and personal service. Welcome to the American Made Grills family and we hope you love your new grill!

FOR YOUR RECORDS

Please record the following information and refer to it when contacting American Made Grills or an authorized dealer. The serial number is located on the rating plate. The rating plate is located on the exterior basin of the grill (fire box) and on the underneath side of the drip tray (select models only).

For warranty information and to register your grill visit, amddirect.com/register

To view on your phone, scan the QR code on your smart phone's camera app.

(For Android devices, use Google Lens.)

INSTALLER:

Please leave this manual for the owner

Serial Number: _____

Model: _____

Date of Purchase: _____

Place of Purchase: _____

WARNING

READ THIS MANUAL CAREFULLY AND COMPLETELY BEFORE USING YOUR GRILL TO REDUCE THE RISK OF:

Fire, burn hazard, personal injury or property damage, improper installation or servicing electric shock.

THIS PRODUCT IS DESIGNED FOR OUTDOOR USE ONLY

Improper installation, adjustment, alteration, service or maintenance can cause property damage, injury or death. Read this manual thoroughly before installation, use, or servicing of this product.

CODE AND SUPPLY REQUIREMENTS:

This grill must be installed in accordance with local codes and ordinances, or, in the absence of local codes, with the latest National Fuel Gas Code (ANSI Z223.1/NFPA 54), or Natural Gas and Propane Storage and Handling Installation Code (CSA-B149.1)

IF YOU SMELL GAS:

Shut off all gas supply lines to the grill. Extinguish any open flames. Carefully open the lid. Remember, it may be extremely hot! If odor continues, keep everyone away from the grill and immediately call your gas supplier or your fire department.

CALIFORNIA PROPOSITION 65

This product can expose you to chemicals including Chromium which is known to the State of California to cause cancer and birth defects or other reproductive harm.
California law requires businesses to warn customers of potential exposure to such substances. To minimize exposure to the substances, always operate this unit according to the use and care instructions found in this manual. Be certain to provide adequate ventilation when cooking.

EXPLOSION HAZARD:

DO NOT use the grill as a storage area for flammable materials. Keep area clear and free from combustible materials, gasoline, and other flammable vapors and liquids. Failure to do so can result in death, explosion, or fire.
An LP cylinder not connected for use shall not be stored in the vicinity of this or any other appliance.

The outdoor cooking gas appliance and its dedicated shutoff valve must be disconnected from the gas supply piping system during pressure testing of that system at test pressures in excess of .5 psi (3.5kPa).
The outdoor cooking gas appliance must be isolated from the gas supply piping system by closing its dedicated manual shutoff valve during any pressure testing of the gas supply piping system at test pressures equal to or less than .5 psi (3.5kPa).

STATE OF MASSACHUSETTS

Massachusetts requires all gas be installed using a plumber or gas fitter carrying the appropriate Massachusetts license.
All permanently-installed natural gas or propane installations require a "T" handle type manual gas valve be installed in the gas supply line to this appliance.
This does not apply to portable propane installations using a 20 pound cylinder.

WARNING

SAFETY AND INSTALLATION WARNINGS

- Please read all instructions before installation or operating your gas grill to prevent injury and appliance damage
- All gas grills will get hot during use. Use extreme caution when operating the grill
- Do not touch hot surfaces. Always use the handle to open or close the grill
- Never use dented, rusty or damaged propane cylinders. Never store additional or empty propane cylinders in the grill cabinet or in the vicinity of this or any other appliance
- Close supervision is necessary when this or any appliance is used near children. Keep children away from the grill during operation and until the grill has cooled off
- Children should never be left alone or unattended in an area where a grill is located. Place your grill well away from areas where children play. Do not store items that may interest children in or around the grill, in the cart, or in the masonry enclosure
- Never move the grill when hot. When in use, portions of the grill are hot enough to cause severe burns.
- Always maintain the required clearances from combustibles as detailed. The grill is designed for outdoor use only. Never use in a garage, building, shed, breezeway, or other enclosed area. Do not use this grill under any unprotected overhead combustible construction
- Gas grills are not designed or certified for and are not to be installed in or on recreational vehicles, portable trailers, boats or any other moving installation
- Always have an ABC Fire Extinguisher accessible — never attempt to extinguish a grease fire with water or other liquids
- Storing your grill: Store your grill in a well-ventilated area. If stored indoors, detach and leave L.P. cylinder outdoors in a well-ventilated area away from heat and away from where children may tamper with it
- Keep any electrical supply cord and the fuel supply hose away from any heated surfaces. Electrical cords should be placed away from walkways to avoid tripping hazard
- Do not repair or replace any part of the grill unless specifically recommended in this manual. Other service should be performed by a qualified technician
- If the grill is installed by a professional installer or technician, be sure that he/she shows you where your gas supply shut-off is located. All gas lines must have a shut-off that is readily and easily accessible. If you smell gas, check for gas leaks immediately. Check only with a soap and water solution. Never check for gas leaks with an open flame
- Do not twist the gas supply hose
- Inspect the L.P. gas supply hose prior to each use of the grill. If there is evidence of excessive abrasion or wear, or the hose is cut, it must be replaced before using the grill
- The use of accessories, regulators, or components not recommend by the appliance manufacturer may cause injuries and will void warranty
- Never light the grill with the hood closed and be certain the burners are positioned and seated over the gas valves and on the burner support
- Never lean over the cooking surface when lighting or operating the grill
- Use barbecue tools with wood handles and insulated oven mitts when operating the grill
- Be sure the gas supplied to the grill conforms to the model you purchased. A natural gas grill requires natural gas to operate; a liquid propane grill requires liquid propane to operate
- Never connect the appliance to an unregulated gas supply line. Grills operated without a regulator are unsafe and will not be serviced until installed properly and safely. Unsafe operation without a gas regulator will void the warranty
- Grills operating with natural gas must be installed with the NG regulator supplied with the unit and set to 4.0" of water column pressure
- Grills operating with liquid propane must be installed with an LP regulator and set to 11" of water column pressure

TABLE OF CONTENTS

ILLUSTRATED PARTS 01
REPLACEMENT PARTS LIST 02
BEFORE GRILLING 03
INSTALLATION 05
GAS REQUIREMENTS 07
LIGHTING THE GRILL 10
MAINTAINANCE TIPS 11
GRILL FEATURES 14
WARRANTY 16

ATLAS GRILL

ILLUSTRATED PARTS

*ATS36 FEATURED IN ILLUSTRATION

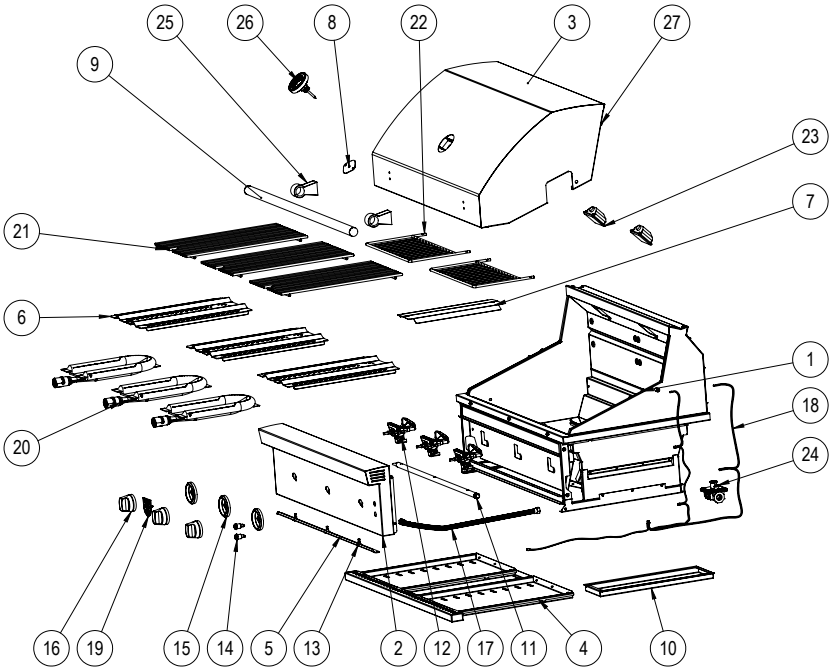

REPLACEMENT PARTS LIST

ITEM	DESCRIPTION	PART NUMBER	QTY (ATS36)
1.	Firebox Assembly	80370	1
2.	Front Face Assembly	80377	1
3.	Front Hood Assembly	80379	1
4.	Drip Tray Assembly	80378	1
5.	LED Bracket	31863	1
6.	Flame Tamer	31852	3
7.	Heat Barrier Bracket	31853	1
8.	Plate, Thermometer	30248	1
9.	Rod Handle	32297	1
10.	Drip Pan	31866	1
11.	Burner Manifold	10792	1
12.	Main Gas Valve	10350	3
13.	LED Light Bulb	10133	3
14.	Light Switch	10134	2
15.	Bezel Knob	10464	3
16.	Valve Knob	10463	3
17.	Flex Gas Line	T100-9898-22	1
18.	LED Light Wiring Harness	10729-36	1
19.	AMG Badge	10549	1
20.	U Tube Burner	10445	3
21.	Burner Grate	10719	3
22.	Warming Rack	10503	2
23.	Interior Light	10140	2
24.	Gas Regulator	10443	1
25.	Rod Handle Stanchion	10459	1
26.	Temperature Gauge	10770	1
27.	Rubber Bumper	10026	1

BEFORE GRILLING

SHIPMENT ARRIVING DAMAGED:

VISIBLE DAMAGE

If your shipment arrives with visible damage to the box/carton, be sure the damage is noted on the bill of freight or express receipt and signed by the person making the delivery. File claim for damages immediately, regardless of the extent of damage.

CONCEALED DAMAGES

If damages are unnoticed until the grill is unpacked, notify the transportation company or carrier immediately and file a concealed damage claim with them. This should be done within (5) days of the delivery date. Be sure to hold on to the box/carton for inspection. We cannot assume responsibility for damage or loss incurred in transit.

TESTING FOR LEAKS

Create a soapy water solution of 1 part soap and 3 parts water. Confirm that all control knobs are in the off position. Turn on the fuel supply. For natural gas, turn the valve handle ¼ turn to align with the gas flow. For LP, turn the cylinder valve counter clockwise one full rotation. Apply the soap solution generously by paint brush or squirt bottle on all connections and fittings. If bubble appear to grow on any of the connections, you have a gas leak. IMMEDIATELY turn off the gas supply. Wash off the soapy solution with cold water and dry. Tighten the loose joint or replace the faulty part with manufacturer-recommended replacement parts. DO NOT attempt to repair the L.P. cylinder valve if it is damaged. The only way to safely resolve a damaged cylinder is to replace it by calling an authorized gas appliance service technician or an LP gas dealer. Repeat the leak test to ensure that no leaks are present. Do not use the appliance until the leak is corrected.

IMPORTANT NOTES:

BE MINDFUL OF WIND DIRECTION

Using your grill in windy conditions may disrupt the front-to-back air flow that the grill is designed for. If you notice that the temperature gauge fails to rise while grilling with all burners on nigh and the hood closed, then be careful. If wind keeps the heat from exiting the rear of the grill, then the control panel and knobs could become extremely hot. Your grill pulls air in through its front and vents hot gases out the rear hood; do not grill if wind is entering the rear hood of the grill.

GAS LINE LENGTH

Keep all gas supply lines as short as possible. Gas lines lose pressure over distance and with each elbow or "t" fitting added. This drop in pressure affects grill performance.

PROPER LEVELING

PROPER LEVELING DURING INSTALLATION IS CRITICAL. A GRILL THAT IS OUT OF LEVEL WILL CAUSE ERRATIC BURNER COMBUSTION AND INEFFICIENT, UNEVEN HEATING. THE GRILL SHOULD BE LEVEL IN ALL DIRECTIONS. ADJUSTMENTS MAY NEED TO BE MADE EACH TIME WHEN MOVING A FREESTANDING UNIT.

CONSTRUCTION ZONES

Keep all stainless steel products away from construction zones. Construction debris such as (but not limited to) stone dust, stucco, and lime dust could damage or permanently discolor stainless steel products. Keep all caustic chemicals including chlorine and pool cleaning products away from stainless steel at all times.

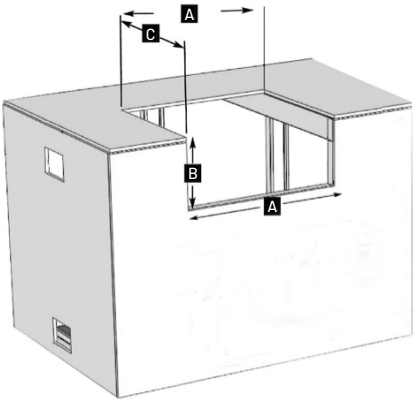

CUT OUT DIMENSIONS

GRILL MODEL	A: WIDTH	B: HEIGHT	C: DEPTH
ATLAS 36"	34"	10"	19 3/4"

OVERALL PRODUCT DIMENSIONS

GRILL MODEL	A: WIDTH	B: HEIGHT	C: DEPTH
ATLAS 36"	36"	26"	26"

ALL BBQ ISLANDS MUST BE MANUFACTURED FROM "NON COMBUSTIBLE" MATERIAL. IF COMBUSTIBLE MATERIAL IS BEING USED, AN AMERICAN MADE GRILLS GRILL LINER IS REQUIRED.

NOTE:

For the minimum clearances between the grill and any side or rear walls, your setup must fall within one (or more) of the following:

IMPORTANT NOTE:

Clearance between grill and strictly non-combustible wall (i.e. brick wall, Clearance Fig. 1). The grill must have a minimum of 4" right, left and rear clearance from any non-combustible wall. This allows for proper ventilation and helps prevent dangerous overheating.

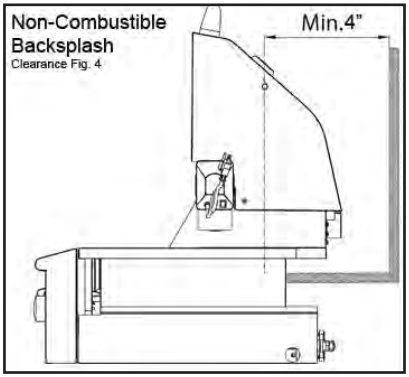

Clearance between grill and protected combustible wall (i.e. a non-combustible wall in front of a combustible wall to serve as a barrier. This can be accomplished by brick or a metal stud finished with non-combustible substrate. Clearance Fig. 2). The grill must have a minimum of 14" right, left and rear clearance from the protected combustible wall. (The 4" non-combustible material clearance, plus an additional 10" clearance between the grill and protected wall.)

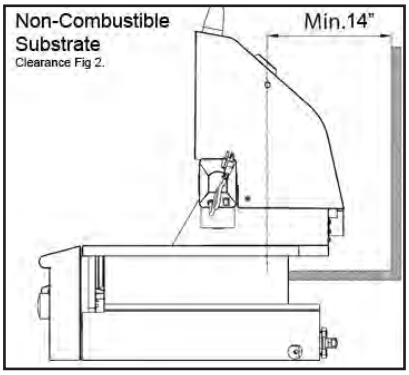

SIDE AND REAR WALL CLEARANCES

Clearance between grill and combustible wall (Clearance Fig. 3). The grill must have a minimum of 18" right, left and rear clearance from any combustible wall.

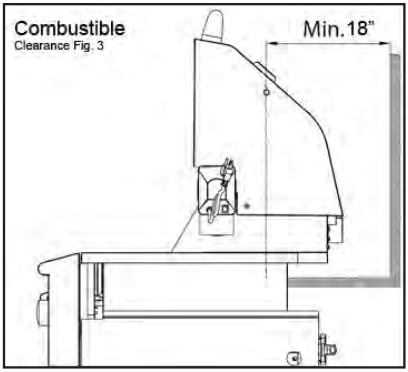

STAND-ALONE (CART) INSTALLATIONS

AMG offers an optional, custom grill cart for stand-alone installations that utilize a standard 20 lb. propane tank. Please note the requirements below regarding propane tank usage and handling, and check the dimensions in the following section for proper clearances in your installation planning process.

BACK SPLASH CLEARANCES (IF APPLICABLE)

If a non-combustible backsplash exists, it must have a minimum of a 4" clearance from the rear of the grill (to allow for proper ventilation and help prevent dangerous overheating. Clearance Fig. 4).

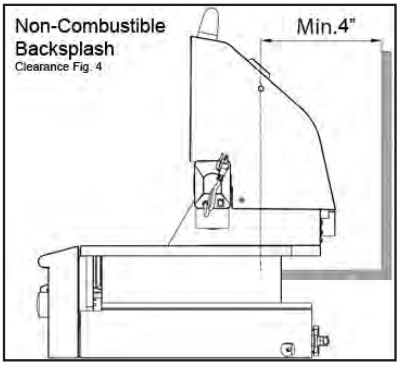

IMPORTANT NOTE:

This 4" backsplash clearance must first be met prior to any non-comVbustible walls beginning behind it.

OVERHEAD CONSTRUCTION AND EXHAUST HOOD REQUIREMENTS

This grill is designed for outdoor use only. DO NOT use this grill inside a building, garage, or enclosed area. DO NOT use this grill in or on a recreational vehicle or boat. When installing this grill in a combustible surround, an American Made Grills insulating jacket/grill liner must be used.

A minimum five (5) foot clearance is required between the countertop and the overhead construction.

When installed under combustible overhead construction, the area above the cooking surface of the grill must be covered with an exhaust hood. The exhaust hood provides the protection for the combustible overhead construction.

IMPORTANT NOTE:

- **DO NOT** use this appliance under **unprotected** combustible overhead construction.
- When installed under overhead non-combustible construction, an exhaust hood is highly recommended.

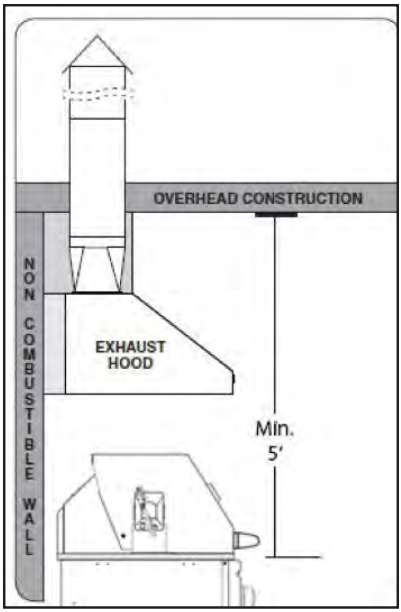

INSTALLATION

COMBUSTABLE OVERHEAD CONSTRUCTION

Exhaust hood required.

BACK SPLASH CLEARANCES (IF APPLICABLE)

Exhaust hood is highly recommended.

UNPACKING YOUR GRILL

Included with your Atlas grill are the following loose items:
Cooking Grates: ATS36(3)
Burner Covers: ATS36(3)
Warming Rack: ATS36(2)
Drip Tray: ATS36(1)
Burners: ATS36(3)
Grill Head Cover: ATS36(1)

- **Set of orifices**
- If grill is factory set LP, NG orifices will be included
- If grill is factory set NG, LP orifices will be included
- The drip tray will be at the bottom of the unit and will slide into the drip tray support brackets.
- Above the heat shields are the Red Brass Burners (already installed).

GAS REQUIREMENTS

WARNING!

- **GAS LINES**
  Never connect a gas line directly to the grill. A pressure regulator must be installed on all gas equipment. Removing or failing to install the pressure regulator can result in fire and serious personal injury and will void the warranty

USING A VENT HOOD

When using an exhaust hood, the area above the cooking surface of the grill must be covered with a hood larger than the cooking area of the grill, AND with a minimum of 1200 CFM (cubic feet per minute) for proper outdoor application.

MINIMUM PRESSURE REQUIREMENTS

Ensure the gas supplied meets the minimum pressure requirements. See below table for gas requirements measure in water column (w.c.) pressure:

GAS TYPE	MAXIMUM	MINIMUM
NATURAL GAS	7" W.C.	4" W.C.
LIQUID PROPANE	14" W.C.	11" W.C.

Both the regulator and burner orifices have been tuned for the type of gas specified on the rating plate. Converting to a different type of gas requires a conversion kit. Conversion kits are included with this grill and located with the manual. Converting gases may require additional parts not included with this grill. (See Gas Conversion section for details).

IMPORTANT:

All installation and all installation parts must conform to local codes with the National Electrical Code, ANSI Z223.1/ NFPA 70 latest edition and the National Fuel Gas Code ANSI Z223.1/NFPA 54 in the U.S. and CGA-B149.1/.2 in Canada

NATURAL GAS REQUIREMENTS

- American Made Grills recommends that only qualified professionals perform the required plumbing on this product.
- Check the Rating Plate to make sure the gas supply you are hooking up to is the gas type the grill is manufactured for.
- To ensure satisfactory performance, the gas supply line must be sized to accommodate the total BTU requirements of all the gas-fired equipment that will be connected to that line.
- In no case should pipe less than 1/2" inside diameter or 1" outside diameter ever be used to connect this product.

NOTE: DO NOT use any tape, pipe dope or threading compound on any flare fitting. This will cause a clog in the regulator and prevent your grill from functioning properly.

CONNECTING TO THE NG REGULATOR

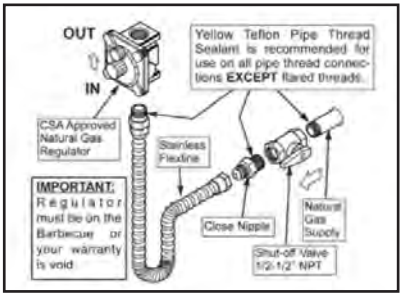

LIQUID PROPANE TANK REQUIREMENTS

Turn off the gas at the supply when grill is not in use.

Please ensure:

- The LP gas tank has a shutoff valve, terminating in an LP gas supply tank valve outlet that is compatible with a Type 1 tank connection device. The LP gas tank must also have a safety relief device that has a direct communication with the vapor space of the tank.
- The tank supply system must be arranged for vapor withdrawal.
- The LP gas tank used must have a collar to protect the tank valve.

Never connect an unregulated LP gas tank to your gas grill. The gas regulator assembly supplied with your gas grill is adjusted to have an outlet pressure of an estimated 11" water column (W.C.) for connection to an LP gas tank.

- Use a standard 20 lbs. LP tank with QCC – 1 fitting
- Grills set up for LP gas come equipped with an LP hose regulator assembly for connection to a standard 20 lbs. LP cylinder (Type 1)

NOTE:

DO NOT use any tape, pipe dope or threading compound on any FLARE FITTING. This will cause a clog in the regulator and prevent your grill from functioning properly.

CONNECTING TO THE LP TANK

The hose and regulator are connected in the following manner:

- Insert the regulator inlet into the cylinder valve and turn the black coupling nut clockwise until the coupling nut is hand tight. DO NOT over-tighten this connection.
- To disconnect the coupling nut, first make sure the main cylinder valve is turned off. Grasp the coupling nut and turn counter clockwise. The inlet will then disengage.

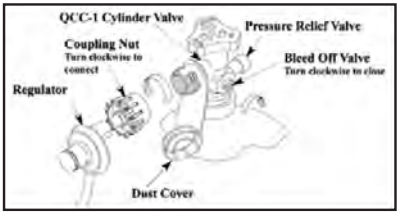

FILLING AND REFILLING LP GAS CYLINDERS

All purging and refilling of LP gas cylinders must be performed by qualified personnel in the LP gas industry. Never store a spare LP gas cylinder under or near this appliance.

Never fill the LP gas cylinder beyond 80 percent full. Failure to follow these instructions may result in explosion, personal injury or death.

GAS REQUIREMENTS

LP gas grill models are designed for use with a standard 20 lb. liquid propane gas (LP) tank with type (1) valve connections. (Not included)
Never connect your gas grill to an LP tank that exceeds this capacity. A tank of approximately 12 inches in diameter by 18-1/2 inches high is the maximum size LP gas tank to use. A propane tank with an OPD (Overfill Prevention Device) must be used. This safety feature prevents the tank from being over-filled which can cause malfunction of the LP gas tank, regulator and/or grill.
The LP cylinder must be constructed and marked in accordance with the specifications for LP gas cylinders of the U.S. Department of Transportation (DOT) and designed for use with a Type 1 system only. Be sure to read and follow all LP connection instructions.

A dented or rusty LP cylinder may be hazardous and should be avoided. If in doubt, have it checked by your LP supplier. Always check for leaks after every LP cylinder change. (See Checking For Leaks)

Cylinders must be stored outdoors in a well-ventilated area out of the reach of children. If your grill is stored indoors, the LP cylinder must be stored outside, in upright position and away from excessive heat.

IMPORTANT:

All installation and all installation parts must conform to local codes with the National Electrical Code, ANSI Z223.1/ NFPA 70 latest edition and the National Fuel Gas Code ANSI Z223.1/NFPA 54 in the U.S. and CGA-B149.1/.2 in Canada

CONNECTING TO A SIDE BURNER

You will need a 'T' adapter fitting (not provided) or similar connection to connect a single gas line to both a side burner and a grill. We recommend a licensed gas technician install all gas lines. See below figure for installation of a 'T' adapter.

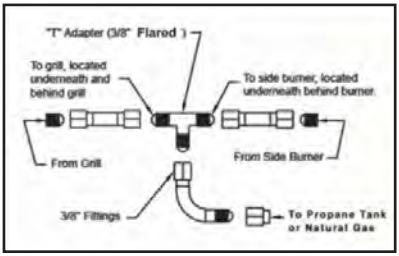

LIQUID PROPANE INSTALLATION

IMPORTANT:

Ventilation is require in the enclosure on opposite sides to create cross-ventilation. Liquid propane is heavier than natural gas and vents should be located near the bottom of the enclosure.

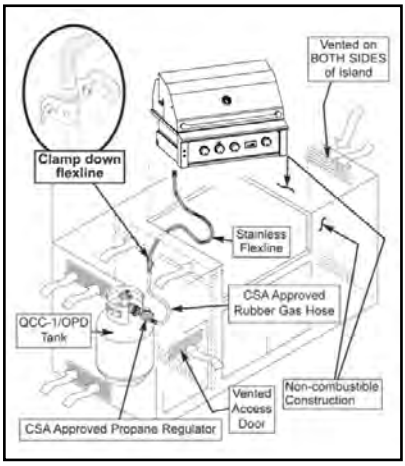

WARNING!

- Before lighting the burners, inspect the gas supply piping or hose. If there is evidence of cuts, wear, or abrasion, it must be replaced prior to use. Always keep your face and body as far away from the grill as possible when lighting.

Never operate the grill unattended.

Your American Made Grills Professional Grill is equipped with reliable, high-efficiency piezo ignition valves. Below are instructions for valve ignition and manual ignition lighting.

VALVE IGNITION

PLEASE Keep your face and body away from the grill top when lighting

- Open the hood before lighting; do not attempt to ignite burners while hood is closed.
- Make sure gas supply is turned on.
- Make sure burner control knobs are in the "OFF" position.
- Press in the control knob then slightly turn the knob counterclockwise while still pressing in.
- Hold in the above position for 5 seconds allowing the gas to reach the manifold.
- Turn the knob counterclockwise past the ignition to the high setting to ignite. You will hear the one time clicking sound of the spark ignition.
- After ignition, set the knob to the desired setting.

NOTE:

1. If the burner doesn't ignite, wait five (5) minutes before repeating steps 4-7.
2. DO NOT turn on more than one valve at a time for either

MANUAL IGNITION

CAUTION:

Always wait five (5) minutes for gas to clear after any unsuccessful lighting attempt.

1. Follow steps 1-3
2. Place either a burning long-barrel butane lighter or a burning long-stem match near the manual flash tube to the right of the grill. For back burners, hold the flame against the surface of the back burner.
3. Hold the lighter or match flame at the top of the manual flash tube for five (5) seconds, or, next to the back burner. Then depress the appropriate control knob and while pressing turn it counterclockwise to the HI position. Remove the lighter or match when the burner lights and release the control knob.
4. If the burner does not light within five (5) seconds of turning the control knob, immediately depress the knob and turn the control knob to off. Wait five (5) minutes before repeating steps 2-4 of the MANUAL LIGHTING instructions.After ignition, set the knob to the desired setting.

NOTE:

Keep the hood closed during the pre-heat period.

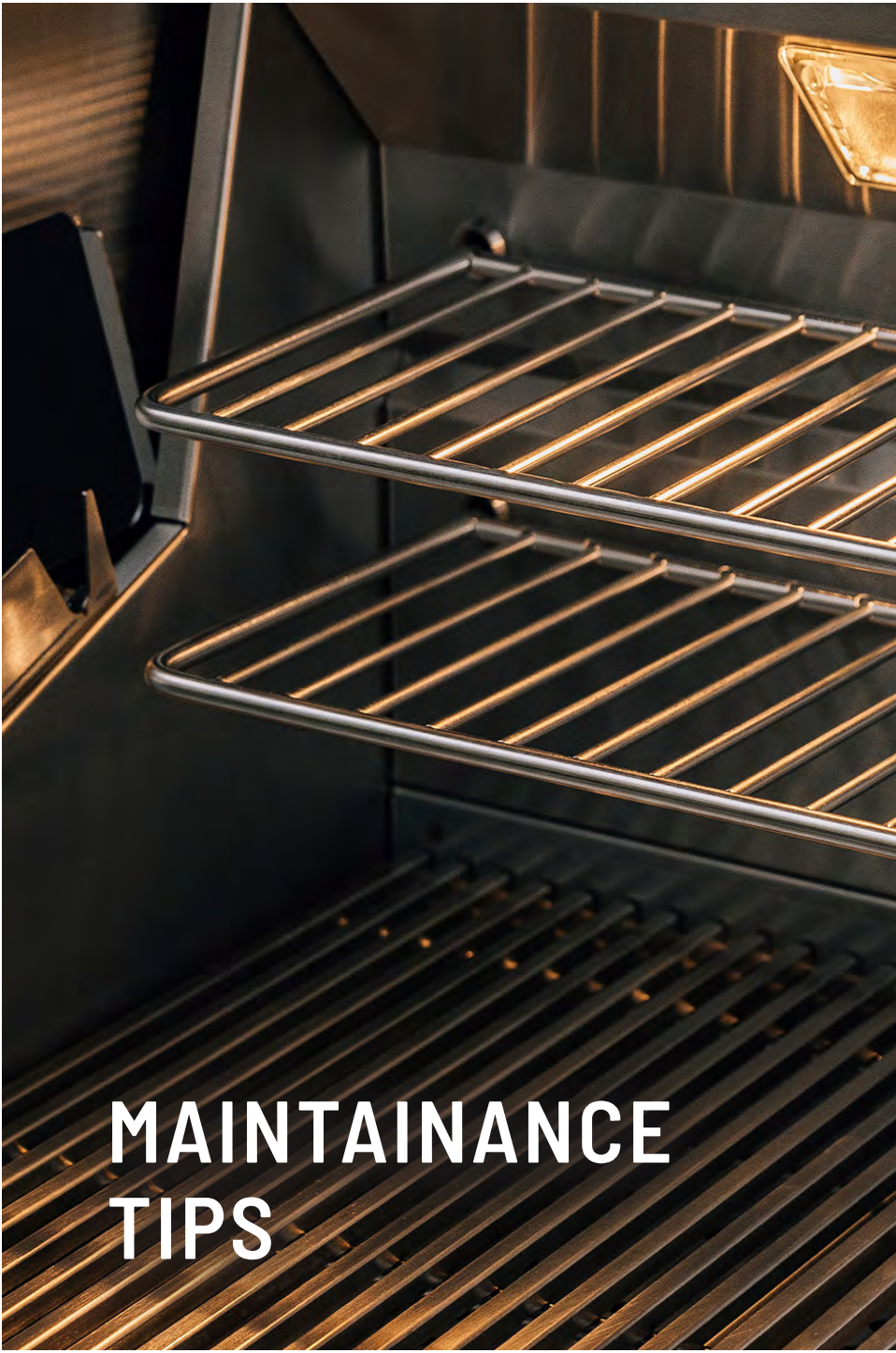

MAINTAINANCE TIPS

PRE-HEATING THE GRILL

Pre-heating your grill every time you use it is extremely important. Pre-heating allows the briquettes to properly heat up, providing more even and more consistent cooking results. Pre-heat your grill by igniting all main burners. Then close the hood and allow the grill to heat for 10 to 15 minutes, the hood thermometer should reach approximately 450°. Once you've reached your desired pre-heat temperature, turn off the burners that you won't be using to cook your food. Remember, surface temperature can be up to 200° higher.

SHUT OFF INSTRUCTIONS

1. To shut off the unit, depress each valve control knob and while pressing turn clockwise to the "OFF" position.

2. Always close the valve from the gas supply after each use of the unit.

NOTE:

When using a portable propane tank: Propane tanks are equipped with a safety shutdown device that may cause low or no gas pressure/ flame at the burners if operating and lighting instructions are not followed exactly.

ADJUSTING YOUR BURNER TO A LOWER SETTING

- Make sure the grill is cool
- Remove the racks so you can see the flames while adjusting the burners
- Light the burner
- Turn the burner to "LOW"
- Pull off the control knob
- Use a flat head screw driver and adjust the "gold flathead screw" in the valve to the proper flame height

MAINTAINANCE TIPS

Stainless steels need to be cleaned for aesthetic considerations and to preserve corrosion resistance. Stainless steel is protected from corrosion by a thin layer of chromium oxide. Oxygen from the atmosphere combines with the chromium in the stainless steel to form this passive chromium oxide film that protects from further corrosion. **Any contamination of the surface by dirt, or other material, hinders this passivation process and traps corrosive agents reducing corrosion protection. Thus, routine cleaning is necessary to preserve the appearance and integrity of the surface.**

GRILL EXTERIOR

Routinely wipe down your grill exterior with warm water and finish by applying stainless steel polish.

GRILL INTERIOR

- Burn off excess food debris and marinades for 15 minutes after cooking
- Once the unit is cool, turn over the burner covers and burn the top side (the burner covers are reversible and are able to be mounted upside down for cleaning purposes)
- Use an approved stainless-steel oven cleaner to remove grease build up
- Routinely have a professional barbecue cleaning company detail the barbecue for best results and longevity

STAINLESS STEEL MAINTAINANCE

After each use wipe down the exterior of the grill to remove grease and splatters. Use a commercially available stainless-steel cleaner to clean and polish the exterior surfaces. Doing these things on a regular basis minimizes the amount of effort required

When removing stubborn stains:

- Do not use metallic abrasives and always rub in the direction of the grain
- Some household cleaning products are not suitable for stainless steel; be sure to read the label before using on the grill
- Always use the mildest cleaning solution first, scrubbing in the direction of the grain
- Specks of grease may gather in the grain of the stainless steel and bake on to the surface, giving the appearance of rust
- To remove these baked-on foods use a fine to medium grit non-metallic abrasive pad (Scotch Brite is good) in conjunction with a stainless-steel cleaner
- Solutions used for cleaning concrete and masonry can be very corrosive and will 'attack' stainless steel
- Be sure your American Made Grills products are well protected before using these products

IMPORTANT NOTE: FOR LOCATIONS NEAR COASTAL AREAS AND POOLS:

#304 stainless steel materials used in the construction of your American Made Grill are highly rust resistant, however, chlorine in the air from swimming pools or the salt from sea air may cause surface rust to appear and even create some pitting if left on the product. Here are a few tips to avoid this:instructions are not followed exactly.

- Regularly wipe down the exterior surfaces with a damp cloth (micro fiber towels work well)
- Allow the surfaces to dry before installing the cover Do not cover a damp grill
- In extreme environments apply a rust inhibitor which leaves a microscopic protective layer on the grill
- For seasonal storage use the product referred to above, ensure the grill is dry, then cover and secure the cover to minimize the amount of damp air getting to the surfaces

After your first use, certain areas of the grill may discolor from the intense heat given off by the burners - this is normal and cannot be cleaned off. For light and heavy food stains there are many different stainless-steel cleaners available.

OPTIONAL ROTISSERIE INSTALLATION

1. Remove the warming rack, cooking grates, and burner covers if necessary
2. Mount the rotisserie motor bracket on either side of the grill nearest the outlet
3. Slide the rotisserie motor onto the rotisserie motor bracket
4. Insert rotisserie spit (rotisserie rod) into motor
5. Place 1st fork onto the rotisserie spit and secure tightly
6. Position the meat onto the spit securing to the 1st fork
7. Place 2nd fork onto the spit securing to the meat and tighten screw
8. Insert collar onto spit
9. Screw on handle nut and handle
10. Add a drip pan beneath the meat to catch drippings and retain moisture in the meat

OPTIONAL DROP-IN SEAR BURNER INSTALLATION

The preferred location to install a drop-in sear burner is on the far left of the grill. This will allow for a sear zone while maximizing the main burner grilling space. To install a drop-in sear burner:

- Remove the grate and burner covers to access the main burner
- Remove the cotter pin securing the main burner (if necessary)
- Remove main burner
- Remove cross tube in between main burners allowing for drop-in sear burner to rest flat, if necessary
- Install sear burner with the center of the orifice positioned in the center of the burner and rest the back of sear burner flat on the rear of the grill. There is a locating pin in the rear of the sear burner that must be seated correctly.

LIGHTING DROP-IN SEAR BURNER

1. Open the hood before lighting; do not attempt to ignite burners while hood is closed.
2. Make sure gas supply is turned on.
3. Make sure burner control knobs are in the "OFF" position.
4. Press in the control knob then slightly turn the knob counterclockwise while still pressing in.
5. Hold in the above position for 5 seconds allowing the gas to reach the manifold.
6. Turn the knob counterclockwise past the ignition to the high setting to ignite. You will hear the one time clicking sound of the spark ignition.
7. After ignition, set the knob to the desired setting.
8. Using the main burner sear zone can cause extreme damage. **100% attendance to this style of cooking is required.**

POWER FRONT PANEL LED

To power internal halogen and external LED lights, insert the trans wire (two prong connection) into the transformer. Plug the transformer into an electrical outlet rated for the transformer.

AMD Direct

GOLD STANDARD WARRANTY

Your investment in AMD Direct products is backed by the strongest warranty in the industry. In addition to precision engineering and outstanding performance, AMD Direct products include our GOLD STANDARD LIFETIME WARRANTY with all replacement parts 100% non-prorated. Effective with purchases as of 8/1/21.

AMD Direct Warranty is valid for original purchaser at original site of delivery with proof of purchase and photo documentation only. Registration form must be submitted online within 30 days of the purchase date to validate the warranty. Warranty is void upon transfer of ownership. Warranty does not apply to products installed in any commercial, rental, or nonresidential application that have not maintained proper upkeep. Warranty covers replacement parts only. Manufacturer is not responsible for labor or labor-related costs. Warranty does not cover discoloration, surface rust, corrosion, or oxidation, which may occur due to harsh environments, chemicals, or overheating. Warranty will not apply for damage resulting from improper installations, abuse, extreme environments, grease fires, or misuse. Proof of regular and proper maintenance is required. Coastal, humid, and/or salt environments are subject to manufacturer review. All out-of-box claims must be made within 30 days of purchase and must be made prior to installation. Any product installed damaged will be considered damaged during installation and not covered under warranty. Warranty and registration forms are available at **www.amddirect.com/register**. Please be advised - all display models are sold "as is" and the warranty covers the following items only: main burners (Gold Standard Lifetime Warranty), grates (Gold Standard Lifetime Warranty), burner covers (Gold Standard Lifetime Warranty). All warranties are subject to the review and approval of the manufacturer.

79 Carlough Road
Bohemia, NY 11795

757.704.1776

GOLD STANDARD
LIFETIME WARRANTY

AMD DIRECT GAS APPLIANCES (GRILLS, SIDE/POWER BURNERS, GAS GRIDDLE & OVEN)

- Gold Standard Lifetime Warranty on construction and manufacturer defects
- Gold Standard Lifetime Warranty on Stainless Steel Construction
- Gold Standard Lifetime Warranty on Cooking Grates, Burners, Burner Covers, Valves, Flame Tamers, and Heatzone Separators, Temperature Gauges, & Hood Springs
- Gold Standard Lifetime Warranty on Briquette Systems
- 3 YEAR Warranty on all other Parts, Components, & Electrical, including: LED Bulbs, Wire Harness, & Switches; Power Source Wire; Transformer; Interior Halogen Light Wire & Bulb

VENT HOODS, REFRIGERATION, COLD STORAGE & SINKS

VENT HOODS
- 5 Year Warranty on all Stainless Steel Construction
- 3 Year Warranty on Blowers, LED Lighting, Wiring Harness and Switches

15" & 24" REFRIGERATION MODELS
- 3 Year Warranty on all construction including Compressors
- 1 Year Warranty on Transformer, LED Bulbs, LED Harness, Power Source Wire, LED Switches, Interior Halogen Light Wire/Bulbs

21" REFRIGERATION MODELS
- 1 Year Warranty on all Construction & Electrical components including Compressor, Transformer, LED Bulbs, LED Harness, Power Source Wire, LED Switches, Interior Halogen Light Wire/Bulbs

COLD STORAGE & SINKS
- Gold Standard Lifetime Warranty on Ice Chest
- Gold Standard Lifetime Warranty on Drains & Faucets

DRAWERS, DOORS, GRILL LINERS, & CARTS

- Gold Standard Lifetime Warranty on Construction, Workmanship and Materials for all Stainless Steel parts, Including Doors, Drawers, Grill Liners, & Carts
- 3 Year Warranty on Electrical (Warming Drawers)

COVERS

- Gold Standard Lifetime Warranty on Covers, including Grills, Carts, Side/Power Burners, Gas Griddle & Oven

COMMERCIAL APPLICATIONS

GAS GRILLS
- Gold Standard Lifetime Warranty on Workmanship, Construction, & manufacturer defects for all commercial and/or hospitality applications
- Warranty is void upon misuse, including lack of regular cleaning, vandalism, or theft
- Warranty is valid only if regular maintenance is exercised. Due to the nature of commercial applications (multiple users, lack of control of use, etc.) regular maintenance is mandatory

AMERICAN * MADE * GRILLS

For more information visit:

AMERICANMADEGRILLS.COM

757.704.1778 | 79 Carlough Road Bohemia, NY 11795

VER.071123