# Installation Instructions

Intertek
C#4000720

**Model Numbers:** ZCVRB60N, ZCVRB60NE, ZCVRB60LP, ZCVRB60LPE
MQZCVRB60NE2, MQZCVRB60LPE2

**Certified to:** CSA/ANSI Z21.88-19 • CSA 2.33-19 • CSA 2.17-2017

marquis FIREPLACE COLLECTION
SERENE

KINGSMAN FIREPLACES Est. 1976

**⚠ WARNING:**
**FIRE OR EXPLOSION HAZARD**
**Failure to follow safety warnings exactly could result in serious injury, death, or property damage.**

- **Do not store or use gasoline or other flammable vapors and liquids in the vicinity of this or any other appliance.**
- **WHAT TO DO IF YOU SMELL GAS**
  - **Do not try to light any appliance.**
  - **Do not touch any electrical switch; do not use any phone in your building.**
  - **Leave the building immediately.**
  - **Immediately call your gas supplier from a neighbor's phone. Follow the gas supplier's instructions.**
  - **If you cannot reach your gas supplier, call the fire department.**
- **Installation and service must be performed by a qualified installer, service agency or the gas supplier.**

**INSTALLER: Leave this manual with the appliance.**
**CONSUMER: Retain this manual for future reference.**

**NOT FOR USE WITH SOLID FUEL.**

This appliance may be installed in an aftermarket, permanently located, manufactured home (USA only) or mobile home, where not prohibited by local codes.

This appliance is only for use with the type of gas indicated on the rating plate. This appliance is not convertible for use with other gases, unless a certified kit is used.

## ⚠ DANGER

**HOT GLASS** WILL CAUSE BURNS.

**DO NOT TOUCH** GLASS UNTIL COOLED.

**NEVER** ALLOW CHILDREN TO TOUCH GLASS.

A barrier designed to reduce the risk of burns from the hot viewing glass is provided with this appliance and must be installed for the protection of children and other at-risk individuals.

If the barrier becomes damaged, the barrier must be replaced with the manufacturer's barrier for this appliance.

**⚠ WARNING:**
**DO NOT OPERATE THIS APPLIANCE WITHOUT DECORATIVE GLASS EMBERS ON BURNER AND MEDIA TRAY**

Kingsman Fireplaces maintains a program of continuous testing, refinement and improvements of all its products. Some aspect of units shown here may be changed at any time without notice or obligation.

A Division of R-Co. Inc.
2340 Logan Ave.
Winnipeg, Manitoba Canada
R2R 2V3 Ph.: (204) 632-1962
Printed in Canada September 9, 2026

# ZCVRB60 Table of Contents


Table of Contents..... 2-3
Safety Screen Installation / Removal..... 4
Pre-installation Questions and Answers / Operating Instructions..... 5
Warnings, Installations, and Operations..... 6-7
Mobile Home/Manufactured Housing Installation..... 8

**INSTALLATION**

Fireplace Installations in Covered Outdoor Locations..... 9
Framing Your Gas Fireplace..... 10
Venting in the Chase - Warning -Venting Must Not Impede Air Flow in the Enclosure..... 11
Nailing Tab Guide..... 12
Chase Options..... 13
Unvented Chase VS Vented Chase- Choose Your Installation..... 14
ZCVRB60 -Facing Materials..... 15
Locating Your Appliance / Fireplace Dimensions..... 16

**INSTALLATION – UNVENTED CHASE**

Framing Dimensions –Unvented Chase- Ventilation Plates in Place -As Shipped..... 17
Clearance to Combustibles – Unvented Chase -Ventilation Plates in Place -As Shipped..... 18
Facing Requirements for Unvented Chase - Ventilation Plates in Place -As Shipped..... 19
Mantel Clearances – Unvented Chase - Ventilation Plates in Place –As Shipped..... 20

**INSTALLATION – VENTED CHASE**

Vented Chase –Removal of Ventilation Plates..... 21
Kingsman Enclosure Grills – Serene Series Fireplaces..... 21
Framing Dimensions- VL60EG Front Grill - Ventilation Plates Removed..... 22
Framing Dimensions- VL60EGS Side Grills – Ventilation Plates Removed..... 23
Framing Dimensions- Open Top – Ventilation Plates Removed..... 24
Optional Recessed Cavity Dimensions – Ventilation Plates Removed..... 25
Clearance to Combustibles –Vented Chase -Ventilation Plates Removed..... 26
Mantel Clearances –Vented Chase -Ventilation Plates Removed..... 27

**COMPONENTS AND ACCESSORIES**

Approved Kingsman Grill Options for ZCVRB60 Vented Chase Installations..... 28
V60PTLK - ZCVRB60 Tile Lip Kit..... 29
Surround Dimensions / Clearances..... 30
Surround Installation..... 31
Component Locations..... 32
Fan Kit Installation..... 33
Split Receptacle- Fan Speed Control Outside of Fireplace..... 34
Door and Glass Information..... 35
Valve Access Cover Removal / Removable Lower Face Panel..... 36
ZCVRB60PL Liner Installation..... 37-38
MQVRB60RLS Liner Installation..... 39

**GAS LINE AND MAINTENANCE**

Gas Line Installation..... 40
Millivolt System, Lighting, & Burner Control..... 41
Lighting Instructions for Millivolt Valve with 7 Day Timer..... 42
Annual Inspection List for Determining Safe Operation of a Direct Vent Gas Fireplace..... 43
Burner System Maintenance..... 44
Gas Conversion Part A..... 45
Gas Conversion Kit for Top Convertible Pilot PART B..... 46

Gas Conversion for Modulator – PART C..... 47
Burner System Removal/Installation Guide..... 48
Burner Tube Removal..... 48

**LOGS AND MEDIA**

ULK64 Universal Light Kit (Optional Accent Lighting Kit)..... 49-50
LED Lighting..... 51
LED Light Strip Replacement..... 52
RBCB1 -Cannonballs- Installation Instructions..... 53
MQ Dealer Accessories for ZCVRB60..... 54-55
MQRBD3 5-Piece Driftwood Log Set..... 56
MQRBD4 - 3 Piece Driftwood Log Set..... 57
MQRBRW 5-Piece Birch Log Set..... 58
MQLOAK1 5-Piece Oak Log Set..... 59
MQLOAK2 4-Piece Oak Log Set (to be used with MQLOAK1)..... 60-61

**PROFLAME 1 IPI SYSTEM**

IPI Electronic Ignition System..... 62
Remote Control Operation..... 63
IPI Electronic Ignition Parts List – Standard System..... 64
Configuration #1: Basic System..... 65
Configuration #2: Remote On/Off..... 66
EGTM / GTM System -No Batteries..... 67
Configuration #3: Remote ON/OFF, variable HI/LO, and fan..... 68
IPI Lighting Instructions..... 69

**PROFLAME 2 IPI SYSTEM**

Proflame 2 Parts List..... 70
Proflame 2 IFC Module and Remote Control..... 71
Cold Climates – CPI Setting - Proflame 2 Remote Control..... 72
Remote Flame Control, Room Thermostat..... 73
Smart Thermostat, Fan Speed Control, Remote Dimmer Control..... 74
Proflame 2 Label Diagram..... 75
WMBH – Wall Mount Battery Holder – Option..... 76

**VENTING SECTION**

Vent Terminal Clearances..... 77
General Vent Installation Information..... 78
Installation Of Side Wall Venting..... 79
Venting Routes and Components..... 80
Venting Straight Up Through Roof..... 81-82
Air Intake Adjustment Plate - Vertical Venting and Power Venting..... 83
Glass Safety / Termination Cap Safety ..... 84
Approved for Power Vent PVH58 / PVH58FM..... 85

**PARTS LISTS**

PVH58 Power Vent Parts List..... 86
ZCVRB60 Parts List..... 87-88

Troubleshooting the Gas Control System..... 89

**WARRANTY**

Limited Lifetime Warranty..... 90

## ⚠ WARNING:

**Wait until unit is COMPLETELY cool before touching glass or attempting to install or remove Child Safety Screen.**

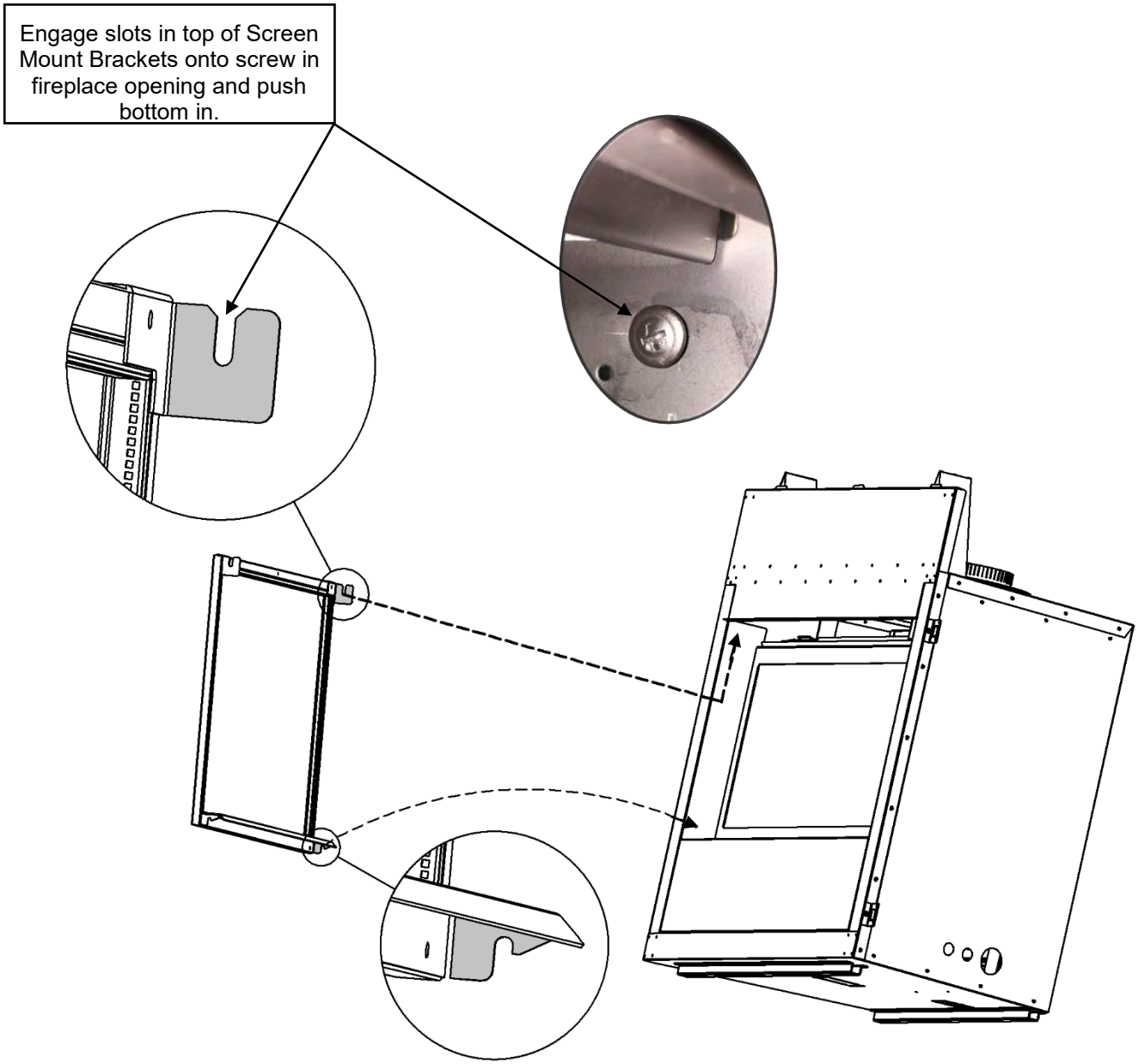


To remove Safety Screen, **WAIT UNTIL FIREPLACE IS COMPLETELY COOL.** Push up at center of Screen Frame and pull bottom away from fireplace.

# Pre-installation Questions and Answers

**About curing of the paint**
Your stove or fireplace has been painted with the highest quality silicone stove paint. This paint dries quickly in 15-20 minutes when first applied at the factory. However, due to the high temperature silicone components, the paint will cure when heat is applied to the appliance as it is first used. The following information applies to the curing process to get the paint fully hard and durable. **Note: Use of painter's tape is not recommended, as it may damage the paint.**

Fire the appliance four successive times for 10 minutes each firing and a 5 minute cool down between each. Be aware during log and firebox paint curing that a white deposit may be developing on the inside of the glass doors. It is important to remove this white deposit from the glass doors using a fireplace glass cleaner.

- Babies, small children, pregnant women and pets should leave the area during the cure phase.
- Ventilate well, open doors and windows.
- Do not touch during curing.

**Why does my fireplace or stove give off odor?**

It is normal for your fireplace to give off some odor at first. This is due to the curing of the paint, adhesives, silicones and any undetected oil from the manufacturing process as well as the finishing materials used with the installations (e.g. marble, tile and the adhesives used to adhere this product to the walls can react with heat and cause odors).

It is recommended that you burn your gas fireplace or stove for a minimum of four hours at a time with the fan off (if a fan is present) after the curing of the paint has been completed. These odors can last upward to 40 hours of burn time; keep burning at a minimum of four hours per use until odors dissipate.

**Noise coming from the fireplace?**

Noise is caused by the expansion and contraction of metal as the appliance heats up and cools down. This is normal and is similar to the sounds produced by a furnace or heating duct. This noise does not affect the operation or longevity of your fireplace.
It is also normal for the fan to make some noise when it comes on. This noise can be reduced somewhat by turning down the speed of the fan with the variable speed control. Be aware, however, that this will reduce the volume of heated air circulated into the room by the fan.

**Note to the Installer:**
Be sure appliance is working properly and its operation (including remote control operation, if included) is fully explained to and understood by the customer.

# Operations and Maintenance Instructions

For safe installation and operation note the following:

- Be sure to read and understand all the instructions in this manual before operation of appliance.
- Ensure all wiring is correct and properly enclosed to prevent possible shock.
- Check for gas leaks.
- Make sure the glass door is properly installed before operation. Never operate the appliance with the glass door removed.
- Make sure venting and termination cap are installed and unobstructed.
- If brick or porcelain liners are used, ensure they are installed.
- Verify that the pilot can be seen when lighting the appliance. If not, the log or rock placement is incorrect.
- If the unit is turned off, you must wait a minimum of 60 seconds before re-lighting it.
- Venting systems should be periodically examined by a qualified agency.
- The flow of combustion and ventilation air must not be obstructed.
- The Burner/Log Assembly has been engineered and permanently adjusted for proper flame control.
- Periodically remove the logs from the grate assembly and vacuum any loose particles from the grate and burner areas. See Log Placement page to remove logs. Vacuum burner parts and replace logs.
- Never use your gas fireplace as a cooking device.
- Label all wires prior to disconnection when servicing controls. Wiring errors can cause improper and dangerous operation. Verify proper operation after servicing.
- Areas in and around the Chase Vent Openings should be cleaned annually.

## Warnings, Installations and Operations - Installation Regulations

This gas appliance must be installed by a qualified installer in accordance with local building codes, or in the absence of local codes, with the current CAN/CSA-B149.1 or .2 Installation Code (in Canada) or the current National Fuel Gas Code Z223.1- NFPA 54 when installed in the United States. This appliance, when installed, must be electrically connected and grounded in accordance with local codes, or in the absence of local codes, with the current CSA C22.1 Canadian Electrical Code or with the National Electrical Code; ANSI/NFPA 70 when installed in the United States.

## ⚠ WARNING

**FOR SAFE INSTALLATION AND OPERATION OF YOUR GAS FIREPLACE PLEASE NOTE THE FOLLOWING:**

1. Do not clean when the glass is hot.
2. Do not use abrasive cleaners.
3. Using a substitute glass will void all product warranties.
4. For safe operation, glass doors must be closed.
5. When purging the gas line, the glass front must be removed.
6. Do not strike or abuse glass. Take care to avoid breakage.
7. Do not alter gas orifice.
8. No substitute materials may be used other than factory supplied components.
9. This appliance gives off high temperatures and should be located out of heavy traffic areas and away from furniture and draperies.
10. Children and adults should be alerted to the hazards of the high surface temperatures of this appliance and should stay away to avoid burns or ignition of clothing.
11. Young children should be carefully supervised when they are in the same room as the appliance. Toddlers, young children and others may be susceptible to accidental contact burns. A physical barrier is recommended if there are at risk individuals in the house. To restrict access to a fireplace or stove, install an adjustable safety gate to keep toddlers, young children and other at risk individuals out of the room and away from hot surfaces.
12. Under no circumstances should any solid fuels (wood, paper) be used in this appliance.
13. Under no circumstances should this appliance be modified. Any parts that have to be removed for servicing should be replaced prior to operating this appliance.
14. Any safety screen, guard, or barrier removed for servicing an appliance must be replaced prior to operating the appliance.
15. Installation and repair should be done by a qualified service person. The appliance should be inspected before use and at least annually by a professional service person. More frequent cleaning may be required due to excessive lint from carpeting, bedding material, et cetera. It is imperative that control compartments, burners and circulating air passageways of the appliance be kept clean. Make sure that the gas valve and pilot light are turned off before you attempt to clean this unit.
16. Clothing or other flammable material should not be placed on or near the appliance. This appliance should not be used as a drying rack for clothing nor should Christmas stockings or decorations be hung from it.
17. Do not use this heater if any part has been under water. Immediately call a qualified service technician to inspect the heater and to replace any part of the control system and any gas control which has been under water.
18. Do not operate appliance unless completely installed as per installation instructions.
19. Failure to position the parts in accordance with these diagrams or failure to use only parts specifically approved with this appliance may result in property damage or personal injury.
20. **WARNING: Do not operate appliance with the glass front removed, cracked or broken. Replacement of the glass should be done by a licensed or qualified service person.**
21. The appliance area must be kept clear and free from combustible materials, gasoline, and other flammable vapors and liquids.
22. The front of the fireplace gives off high temperatures that could ignite combustible material which is kept close to the front of the unit.
23. Ensure that power to the Fireplace is turned off before servicing.
24. Do not operate this Fireplace without the glass front or with a broken glass.
25. Improper installation, adjustment, alteration, service or maintenance can cause injury or property damage. Refer to the owner's information manual provided with this appliance. For assistance or additional information consult a qualified installer, service agency, or the gas supplier.
26. Operation of this appliance when not connected to a properly installed and maintained venting system or tampering with the blocked vent shutoff system can result in carbon monoxide (CO) poisoning and possible death.
27. This appliance is equipped with a three-prong (grounding) plug for your protection against shock hazard and should be plugged directly into a properly grounded three-prong receptacle. Do not cut or remove the grounding prong from this plug.
28. **NOT INTENDED FOR USE AS A PRIMARY HEAT SOURCE.** This appliance is tested and approved as either supplemental room heat or as a decorative appliance. It should not be factored as primary heat in residential heating calculations.
29. This appliance must not be connected to a chimney flue serving a separate solid-fuel burning appliance.
30. Remove all loose materials from the appliance (manual, remote control, etc.) before connecting gas and electricity.
31. Ensure that the remote control is "OFF" before connecting gas and electricity to the appliance.

## Installation Requirements for the Commonwealth of Massachusetts

In the Commonwealth of Massachusetts, the installer or service agent shall be a plumber or gas fitter licensed by the Commonwealth.

When installed in the Commonwealth of Massachusetts or where applicable codes; the unit shall be installed with a CO detector per the requirements listed below.

1. For direct-vent appliances, mechanical-vent heating appliances or domestic hot water equipment, where the bottom of the vent terminal and the air intake is installed below four feet above grade the following requirements must be satisfied:
   - **A.** If there is not one already present, on each floor level where there are bedroom(s), a carbon monoxide detector and alarm shall be placed in the living area outside the bedroom(s). The carbon monoxide detector shall comply with NFPA 720.
   - **B.** A carbon monoxide detector shall be located in the room that houses the appliance or equipment and shall:
     - Be powered by the same electrical circuit as the appliance or equipment such that only one service switch services both the appliance and the carbon monoxide detector;
     - Have battery back-up power;
     - Meet ANSI./UL 2034 Standards and comply with NFPA 720; and
     - Have been approved and listed by a Nationally Recognized Testing Laboratory as recognized under 527 CMR.
   - **C.** A Product-approved vent terminal must be used, and if applicable, a Product-approved air intake must be used. Installation shall be in strict compliance with the manufacturer's instructions. A copy of the installation instructions shall remain with the appliance or equipment at the completion of the installation.
   - **D.** A metal or plastic identification plate shall be mounted at the exterior of the building, four feet directly above the location of vent terminal. The plate shall be of sufficient size to be easily read from a distance of eight feet away, and read "Gas Vent Directly Below".
2. For direct-vent appliances, mechanical-vent heating appliances or domestic hot water equipment where the bottom of the vent terminal and the air intake is installed above four feet above grade the following requirements must be satisfied:
   - **A.** If there is not one already present, on each floor level where there are bedroom(s), a carbon monoxide detector and alarm shall be placed in the living area outside the bedroom(s). The carbon monoxide detector shall comply with NFPA 720.
   - **B.** A carbon monoxide detector shall:
     - Be located in the room that houses the appliance or equipment;
     - Be either hard-wired or battery powered or both; and
     - Shall comply with NFPA 720.

A Product-approved vent terminal must be used, and if applicable, a Product-approved air intake must be used. Installation shall be in strict compliance with the manufacturer instructions. A copy of the installation instructions shall remain with the appliance or equipment at the completion of the installation.

For the state of Massachusetts a **T-handle gas shut-off valve** must be used on a gas appliance. This T-handle gas shut-off valve must be listed and approved by the state of Massachusetts. This is in reference to the state of Massachusetts state code CMR238.

## Carbon Monoxide (CO) Detector

NOTE: It is recommended that a Carbon Monoxide (CO) Detector be installed in or near bedrooms and on all levels of your home. Place a detector about 15ft [4.5m] outside the room that houses your gas appliance.

Certified for installation in a bedroom or bed/sitting room. In Canada must be installed with listed millivolt thermostat. In USA see local codes.

## ⚠ WARNING

This product and the fuels used to operate this product (liquid propane or natural gas), and the products of combustion of such fuels, can expose you to chemicals including benzene, which is known to the State of California to cause cancer and reproductive harm. For more information go to: www.P65Warnings.ca.gov.

# Mobile Home/Manufactured Housing Installation

This Direct Vent System Appliance must be installed in accordance with the manufacturer's installation instructions and the Manufactured Home Construction and Safety Standard Title 24 CFR, Part 3280, or the current Standard for Fire Safety Criteria for Manufactured Home Installations, Sites, and Communities ANSI/NFPA 501A, and with CAN/CSA Z240 MH Mobile Home Standard in Canada.

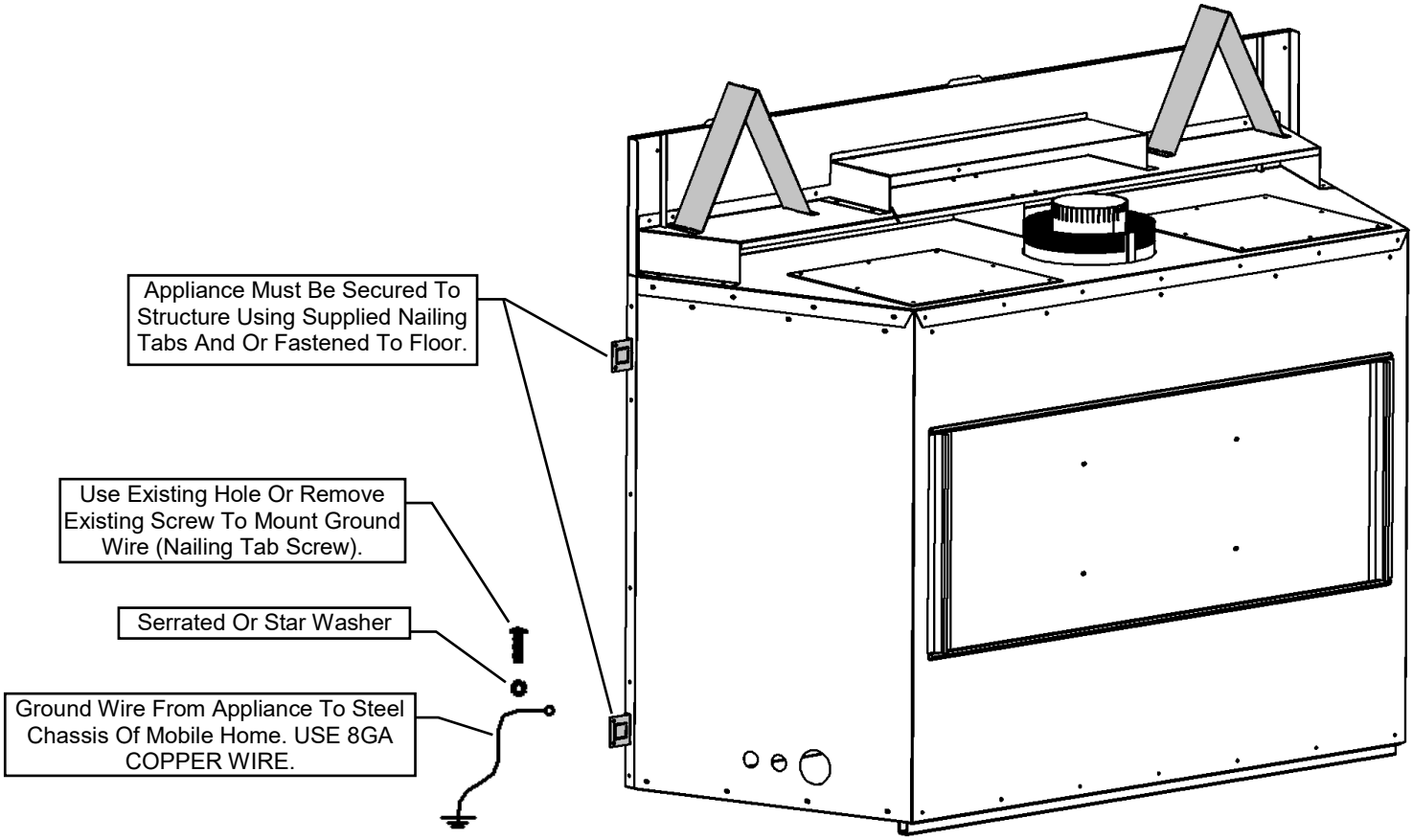


THE VENTED GAS FIREPLACE HEATERS (ANSI Z21.88) IN THIS MANUAL MAY BE INSTALLED IN MANUFACTURED (MOBILE) HOMES AFTER FIRST SALE IN THE USA.

THE VENTED GAS FIREPLACE HEATERS (ANSI Z21.88) IN THIS MANUAL MAY BE INSTALLED IN MANUFACTURED (MOBILE) HOMES IN CANADA.

Please follow the current ANSI/NFPA 70 National Electrical Code in the USA and CAN/CSA C22.1 Canadian National Electrical Code in Canada.

An appliance must be grounded to the steel chassis of the home with 8 ga. copper wire using a serrated or star washer to penetrate paint or protective coating to insure grounding.
Use carriage bolt at the attachment point (see diagram above) to secure the appliance to the floor.

⚠ Warning: Do not compromise the structural integrity of the manufactured home wall, floor or ceiling, during installation of appliance or venting.

**For required venting components see venting installation in appropriate section of this manual.**

Certified for installation in a bedroom or bed/sitting room. In Canada must be installed with listed millivolt thermostat. In USA see local codes.

# Fireplace Installations in Covered Outdoor Locations
# – FOR BASIC MILLIVOLT UNITS ONLY- NO FAN – NO LIGHTS-

**CAUTION – Installation of an indoor gas fireplace with an outdoor exposure is not covered under the (ANSI Z21.88 – CSA 2.22 or ANSI Z21.50 – CSA 2.33) standard(s) used to certify the indoor gas-fired fireplace. The Intertek safety certification will not apply to this installation method. This installation method must be deemed acceptable by the Authority Having Jurisdiction (AHJ) prior to the indoor gas fireplace being installed.**

Kingsman and Marquis Direct Vent fireplaces may be installed into outdoor locations provided they are suitably protected from direct water impingement. However, all installation clearances in the appliance manual must be observed. Framing, Clearances to Combustibles, Mantel Heights, Facing Requirements, Venting Installation, etc. **Use supplied Safety Screen. No vented chase is allowed outdoors.**

- All wiring connections to line power shall be in accordance with outdoor requirements of; -NECA NFPA 70 in the USA -Canadian Electrical Code, CSA C22.1 for Canada.
- The Fireplace is not to be operated in temperatures below freezing (0°C / 32°F).
- ⚠ **NOTE: TEMPERED GLASS WARNING:** Tempered glass is vulnerable to rapid and/or extreme changes in temperature (thermal shock). Take care to prevent water from contacting the fireplace, especially if it is hot.
- See-Through Units are suitable for an outdoor location, but not on the outside wall of a house or other structure, as air flows through both sides of the fireplace.
- A Minimum sheltering cover (overhang) of 1/2 the distance from the base of the fireplace to the ceiling (base of roofline) is required**.**

**EXAMPLE:** The bottom of the fireplace is 84” from the ceiling.
Therefore, 42” of sheltering cover is required above fireplace.

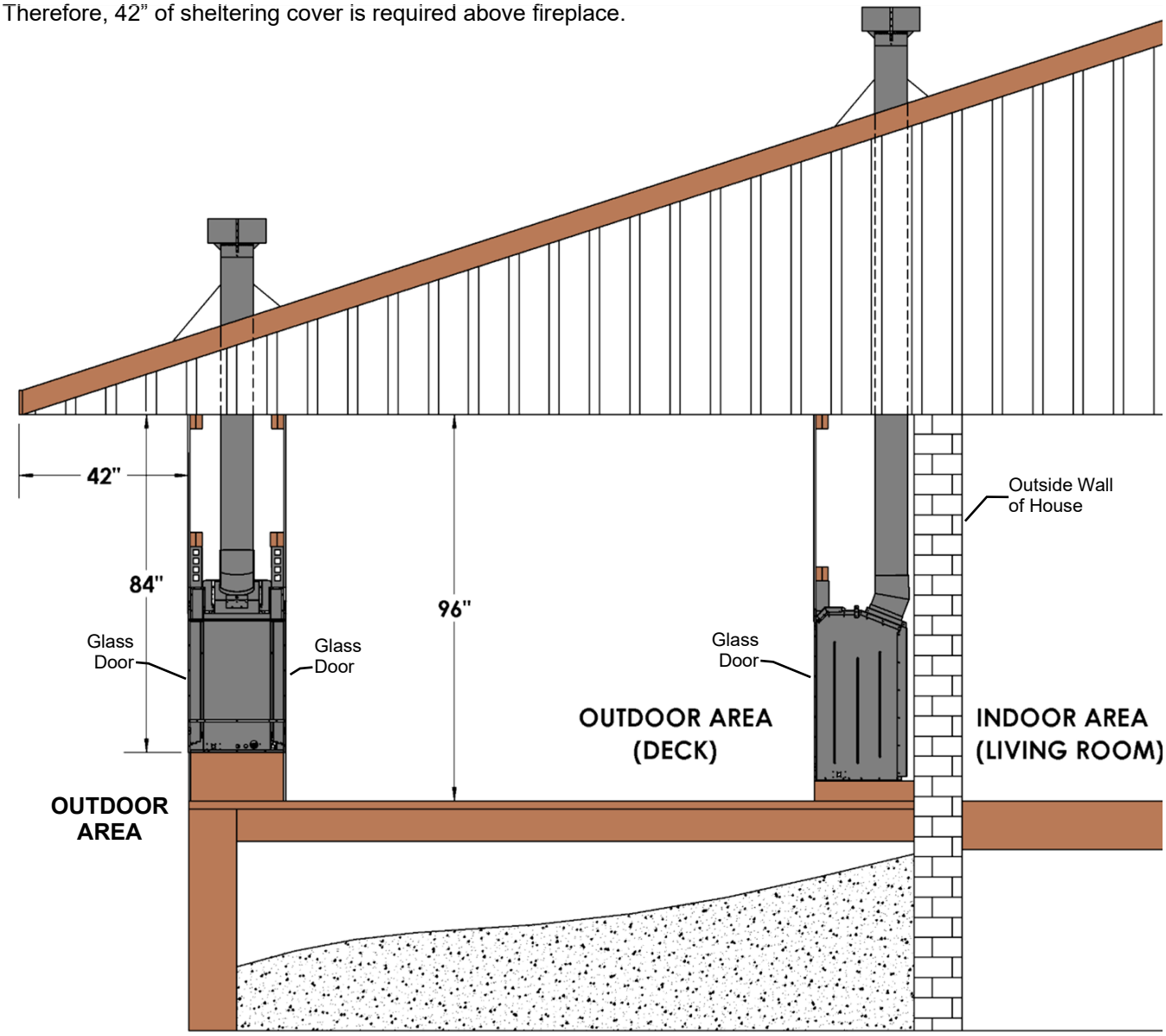

This section is intended for qualified installers only. Before beginning, make note of where the gas and electrical accesses are located on the unit. This will streamline the construction process. Furthermore, familiarize yourself with the venting and clearance requirements (see Venting section) for this appliance. Failure to comply with those requirements can seriously compromise the safety and operation of the fireplace.

**Specifications**

1. Cold climate installation recommendation: When installing this fireplace against non-insulated exterior wall or chase, it is recommended that the outer walls be insulated to conform to applicable insulation codes. Drywall & vapor barrier must be installed over insulation to prevent contact of insulation and unit.
2. Choose fireplace location and frame in accordance with the fireplace framing dimensions specified (view diagrams).
3. Drywall or other combustible material can extend up to the Drywall Stops located on the sides of the unit, and up to the bottom and top.
4. A Hearth is not required for this unit.

**Vertical Venting in Cold Climates**

In cold climate conditions where temperatures go below -10 degrees Celsius or 14 degrees Fahrenheit, we recommend that the chase be insulated and where the vent pipe enters into the attic space that the pipe be wrapped with an insulated Mylar sleeve. This will increase the temperature of the vent and help the appliance to vent properly in cold weather conditions.

It is also important in vertical vented direct vent appliances that the appliance be operated daily during the winter months as this will help stop the termination from freezing up. We recommend using a thermostat set at room temperature to allow the unit to cycle.

For IPI models it may be necessary to set the appliance to Standing Pilot mode to maintain heat in the cavity. The purpose of this procedure is to prevent cold air from penetrating the chimney and then onto the living space. Therefore, when the internal temperature is slightly elevated the fireplace is able to freely exhaust its combustion and hence making it easier to startup.

Certified for installation in a bedroom or bedsitting room. In Canada must be installed with listed millivolt thermostat. In USA see local codes.

**Stand-off Locations**

Make note of where the stand-off locations are. These stand-offs are provided as indicators to illustrate the boundaries for framing. Therefore, no framing material is permitted to extend beyond these stand-offs.

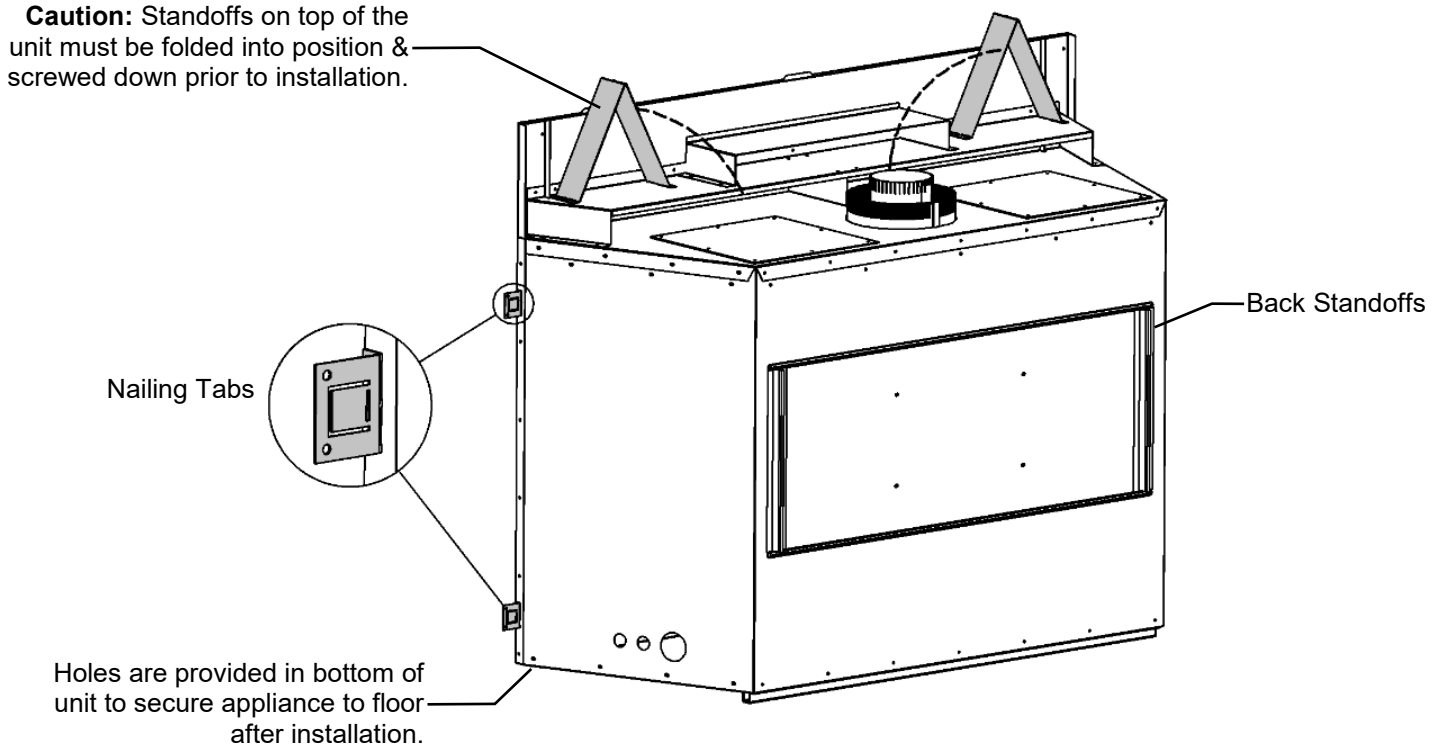

## ZCVRB60 Venting in the Chase - Warning - Venting Must Not Impede Air Flow in the Enclosure

**Horizontal Venting –** Must exit the Enclosure through the back wall directly above the flue. Use a Wall Thimble to protect combustibles. **DO NOT RUN HORIZONTAL VENTING INSIDE THE ENCLOSURE.**

**Vertical Venting –** A minor offset inside the enclosure to avoid a stud with 1" clearance is allowed, but the vent must exit the Enclosure before any major offsets can be made (see below). A Firestop or Attic Insulation Shield must be used on the underside of the top of the Enclosure.

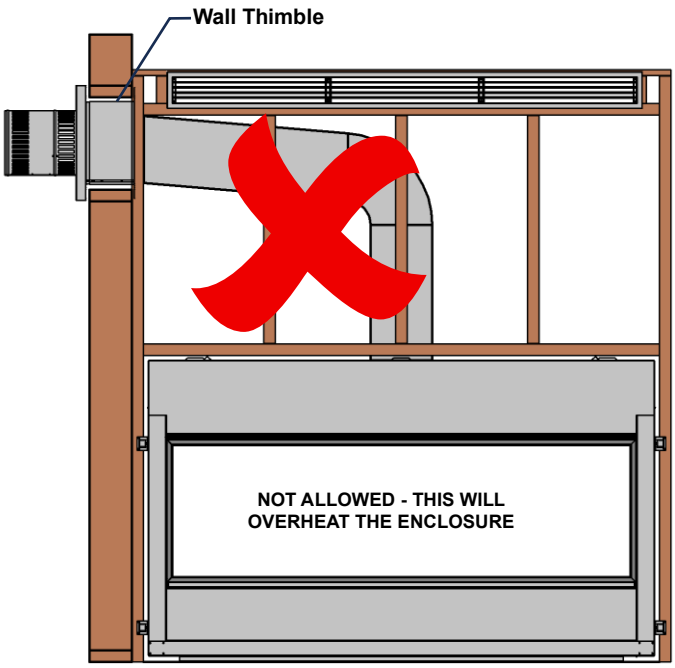


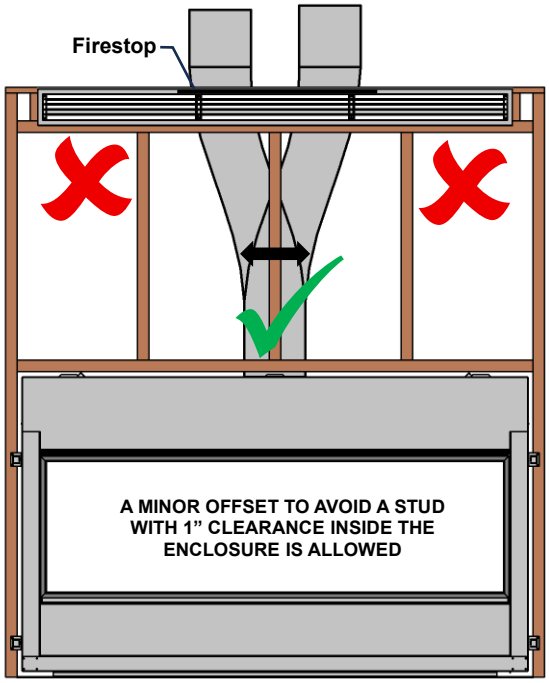


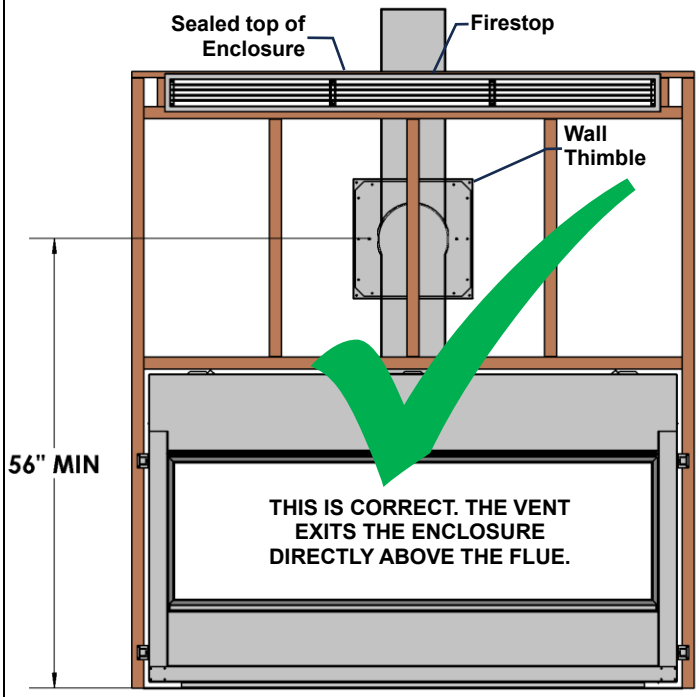


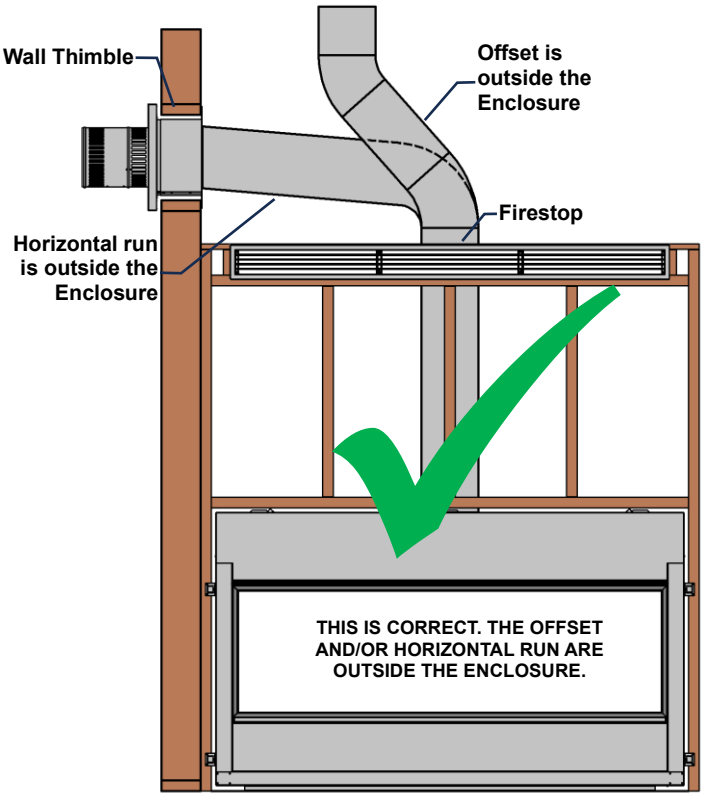

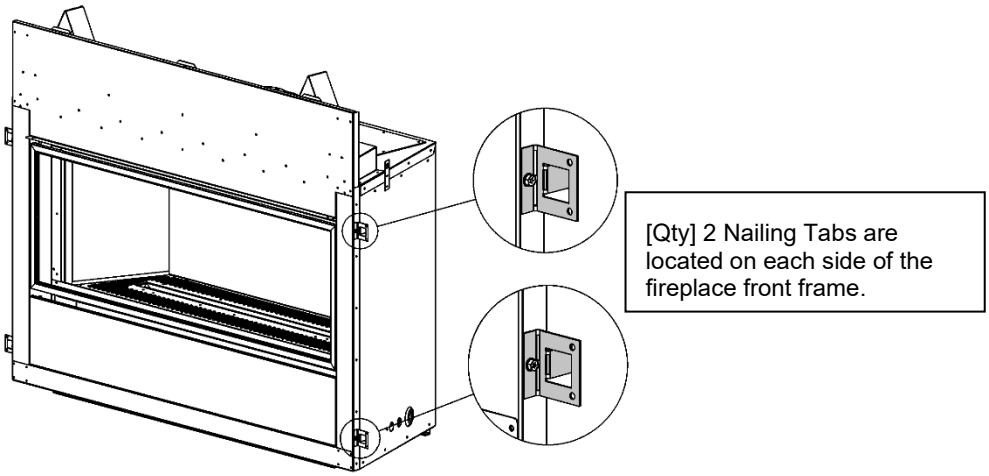


**These Nailing Tabs can be used in two ways:**

## 1/2” Drywall Flush with Face of Fireplace

Fireplace and Combustible Wall to be covered with a surround and / or Non-Combustible Materials (e.g. Stone around Fireplace).

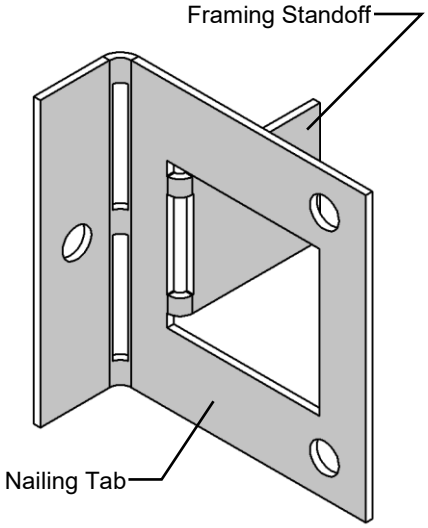


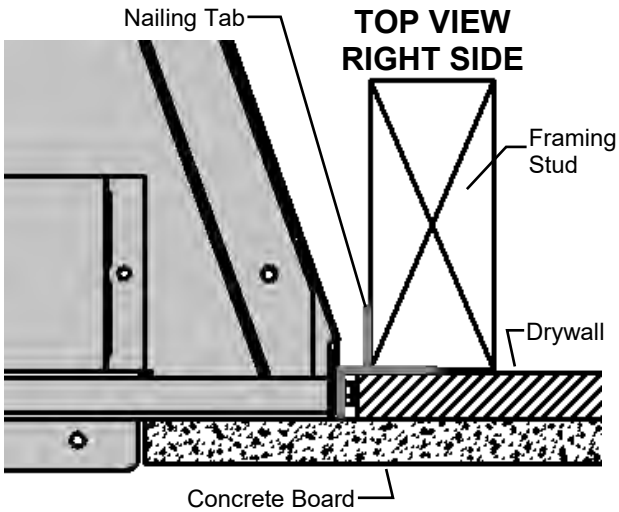


## Framing Flush with Face of Fireplace

Fireplace to be covered with Non-Combustibles (e.g. Concrete Board) for **Flat Wall** appearance.

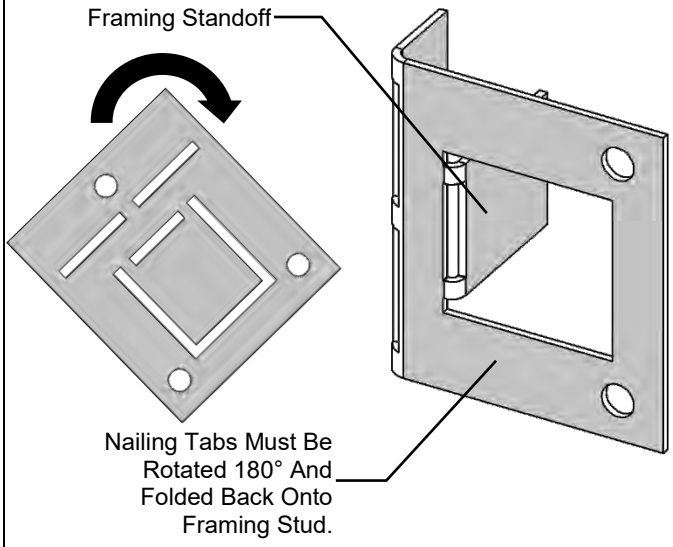


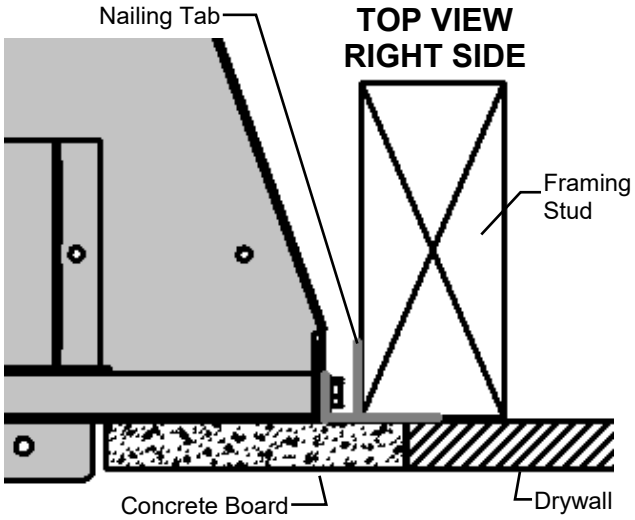

## ZCVRB60 Chase Option 1: Non-Vented Chases

**Fireplace is installed <u>As Shipped</u>, with Ventilation Plates in place.**

- This is a traditional fireplace installation where the fireplace is built into a non-vented chase.
- Non-combustible materials **<u>MUST</u>** cover the face of the fireplace.
- Chase wall surface temperature will be moderately hot.
- Mantel height is higher.

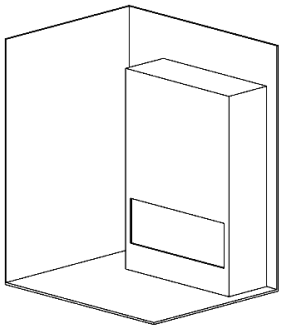

Chase built into room

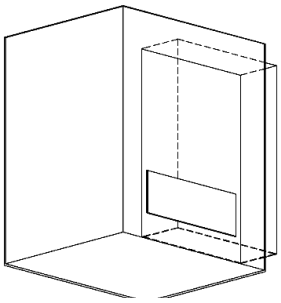

Chase built outside of room (Doghouse)

## ZCVRB60 Chase Option 2: Vented Chases

**(<u>Ventilation Plates are removed</u> from fireplace before it is installed into a Vented Chase.)**

- Combustible materials may cover the face of the fireplace.
- Chase walls will be cooler to the touch.
- Mantel height is lower.
- Chase must be vented at the top with a specified Kingsman grill – **VL60EG, VL60EGS Side Grills**, or **Minimum opening size – 200 square Inches.**

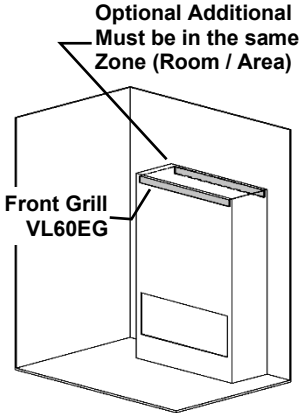


Chase built into room

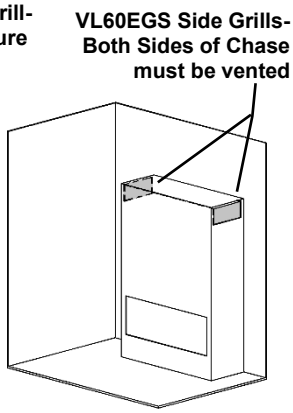


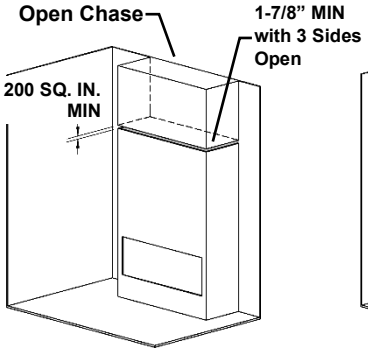


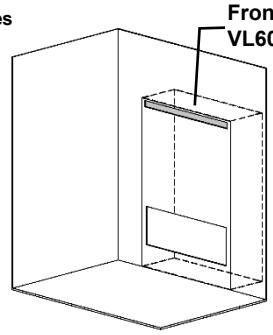


Chase built outside of room (Doghouse)

**NOTE: <u>For oversized enclosures</u>** (i.e., along a long wall), it is recommended to seal them off internally. This will help to remove heat and prevent hot spots. **Be sure to maintain all required clearances and minimum dimensions.**

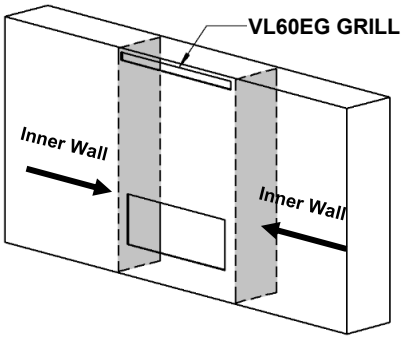


**<u>Recessed Vented Chase- Option: (Note: Side Grills are not allowed for a recessed Chase.)</u>**

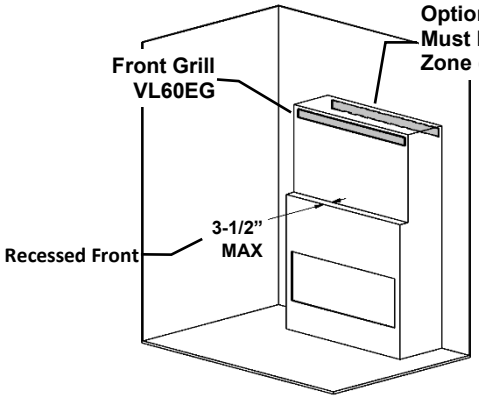


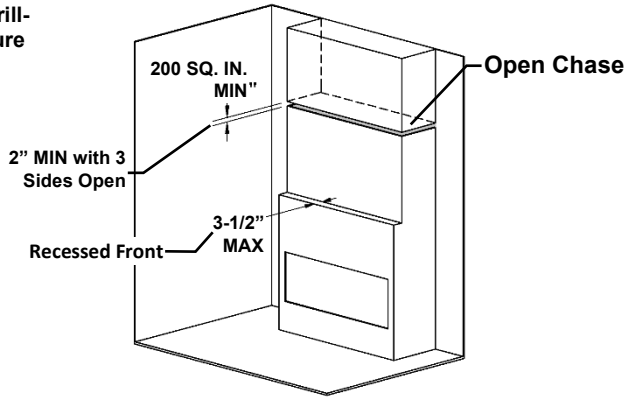

# ZCVRB60 –Unvented Chase VS Vented Chase- Choose Your Installation

**Look at the following chart before you begin the installation.**

| | Lowest Enclosure | Wall Surface Temperature above front of fireplace | TV above Fireplace with Recessed Installation option | Mantel Height (From Bottom of Unit) | Heat can be directed to second room |
|---|---|---|---|---|---|
| **UNVENTED CHASE** | 76” | Moderately Hot | Yes | 39-3/4” | No |
| **VENTED CHASE** | 76” | **40% Cooler** than unvented chase | Yes (Recommended) | 29-1/2” | Yes |

**FRAMED AS**

**UNVENTED CHASE:**

This is a traditional fireplace installation where the fireplace is built into an unvented chase.

- **Non-Combustible Materials Must be used on face of fireplace**
- Wall surface temperature will be moderately hot
- TV above Fireplace is allowed
- Mantel height is higher

Fireplace will be installed with Ventilation Plates in place (as shipped).

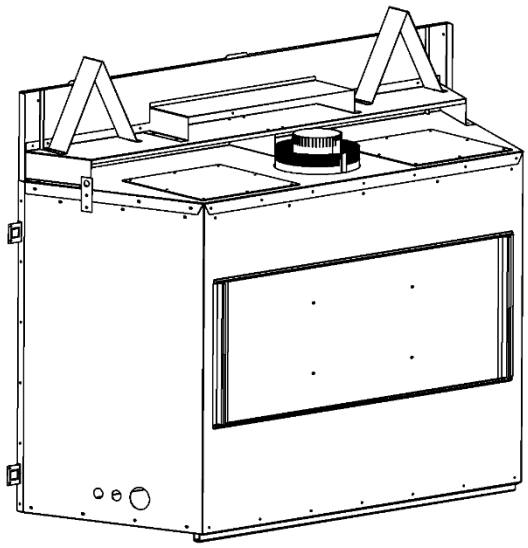

See **“Chase Not Vented”** Framing Section

**FRAMED AS**

**VENTED CHASE:**

The fireplace is installed into a vented chase. There are many different styles of vented chase. See pages in manual for installation details and information.

- **Combustible Materials may be used on face of fireplace**
- Chase walls will be cool to the touch.
- A TV is allowed above the fireplace (recommended)
- Mantel height is lower

Fireplace will be installed with **Ventilation Plates** removed (see instructions in manual).

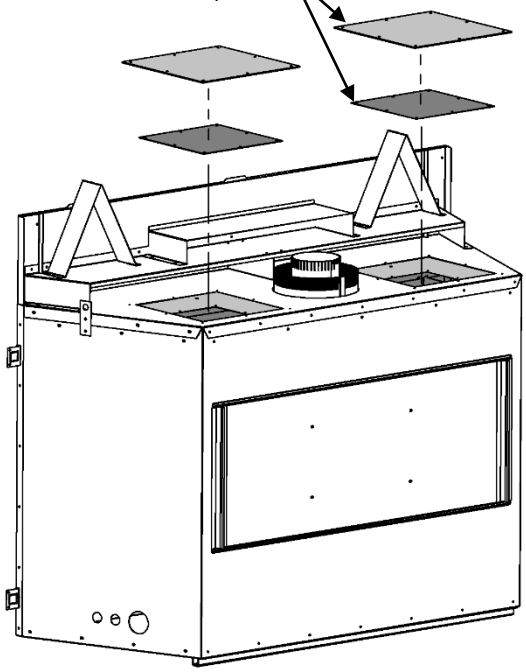

- A minimum opening of **200** square inches of ventilation area is required.
- Chase must be vented using a grill (VL60EG or VL60EGS) or open top.

See **“Vented Chase”** Framing Section

⚠ **CAUTION:** IF VENTILATION PLATES ARE REMOVED, YOU **MUST** VENT THE CHASE!

# ZCVRB60 -Facing Materials-

## A VENTED CHASE CAN HAVE A COMBUSTIBLE COVERING (I.E., DRYWALL) OVER THE FRONT FACE OF THE APPLIANCE.

---

## AN UNVENTED CHASE REQUIRES NON-COMBUSTIBLE COVERING (I.E., CONCRETE BOARD) OVER THE FRONT FACE OF THE APPLIANCE

**Notice:** Granite, tile, or other facing materials are not covered by the fireplace warranty. Natural stone, tile, and other facing materials may crack or discolor (i.e. yellowing of lighter colored materials).
**NOTE: these issues can be avoided if the Chase is Vented.**
**Televisions are not covered by fireplace warranty.**

**Notice: DurockR Brand Cement Board:** The manufacturer recommends ***CGC SheetrockR Brand DurabondR 90 Setting- Type Drywall Compound*** rather than a ready-mix product for finishing.

When finishing the wall around the fireplace, it is critical that the wall covering be fastened properly. It is acceptable to pre-drill holes and use self-tapping screws which may be used to fasten a backer for tile, marble, etc. Screws being installed through non-combustible board should be self-tapping type with a maximum length of 2 inches.
**Do not drill or install longer screws (over 2") as this may damage internal components.**

- We recommend that CONCRETE BOARD (non-combustible material) be tied in to the entire perimeter of the fireplace for durability.

**Finishing Recommendations** (Obtained from professional construction contractors and finishers):

- Frame unit with metal studs (minimum 20 gauge). **Wooden studs may be used, but may cause drywall screws to pop or pull due to wood studs drying out.**
- Minimum of 1/2" CONCRETE BOARD cement board (this **non-combustible** panel is ULC listed as a wall shield/floor protector) and fasten to the entire perimeter framing.
- Use fiberglass (mesh) tape for all joints in area of the fireplace.
- Use Yellow joint mud (contains high amounts of glue) – two coats, finishing with one coat of green topping mud, sand and prep for painting.
- If not using a surround, a metal "L" Trim may be used to finish perimeter of CONCRETE BOARD.
- OTHER NOTES:

-**A full single shee**t of non-combustible board (no joints) above the unit is recommended if possible.

-It is preferred to attach the non-combustible board to **framing only** and not directly to the unit to allow for expansion and contraction during normal operation.

-Lighter colored painted surfaces may discolor due to heat exposure.

## ZCVRB60 Locating Your Appliance

**LOCATION KEY:**

A. Flat on Wall

B. Across the Corner

C. As an Island*

D. As a Room Divider*

E. Flat on Wall Corner

F. Exterior Wall

See Mantel Leg Clearances Instruction for the proper placement of fireplace.

Island installation with a top vent is possible as long as the horizontal portion of the vent system does not exceed 20 feet (6.1 m).

***NOTE:** Horizontal vent runs and offsets are not allowed inside the enclosure.

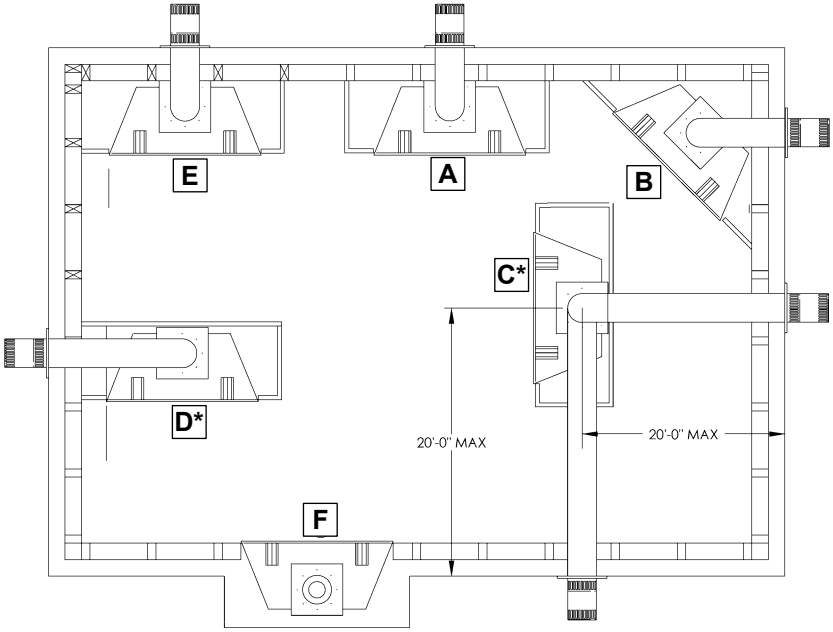


## ZCVRB60 Fireplace Dimensions

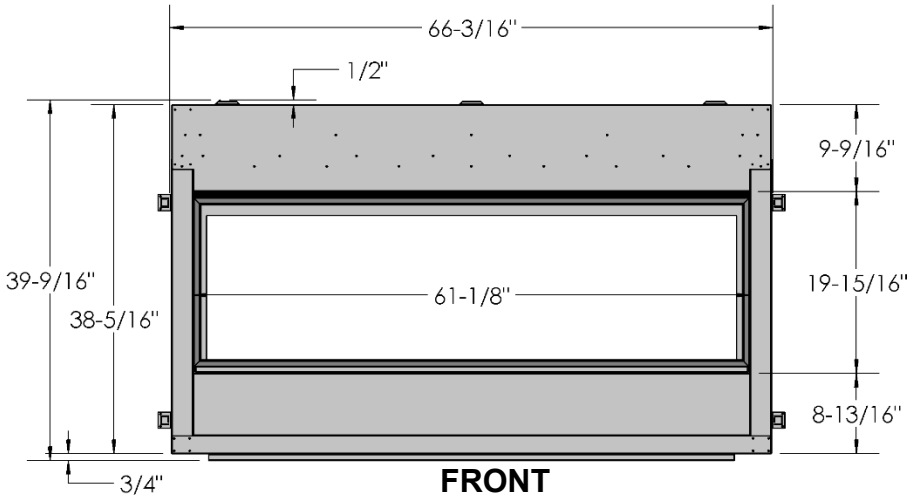


**FRONT**

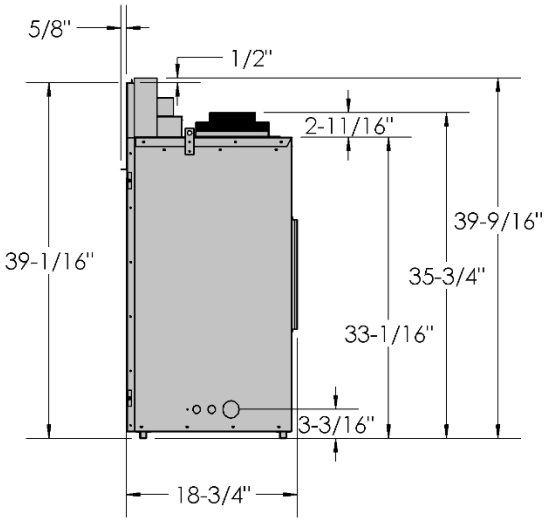


**RIGHT SIDE**

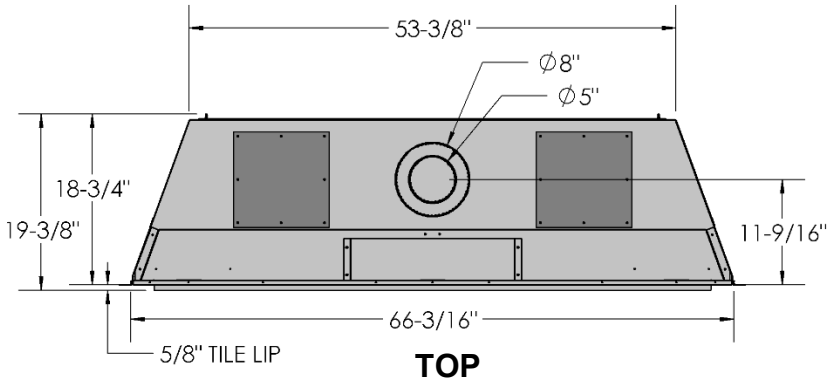


**TOP**

## ZCVRB60- Framing Dimensions –Unvented Chase-Ventilation Plates In Place- As Shipped

Determine whether face of fireplace will be:

- Flush with finished wall (e.g., for surround, cultured stone or other non combustible covering).
- Flush with framing (to be covered with concrete board for a Flat Wall appearance).
- Refer to Nailing Tab Guide section also.

**These Structures Are Not Load Bearing.**

**ELECTRICAL WIRES IN CHASE MUST BE PROPERLY ATTACHED TO INSIDE WALL OF CHASE.**

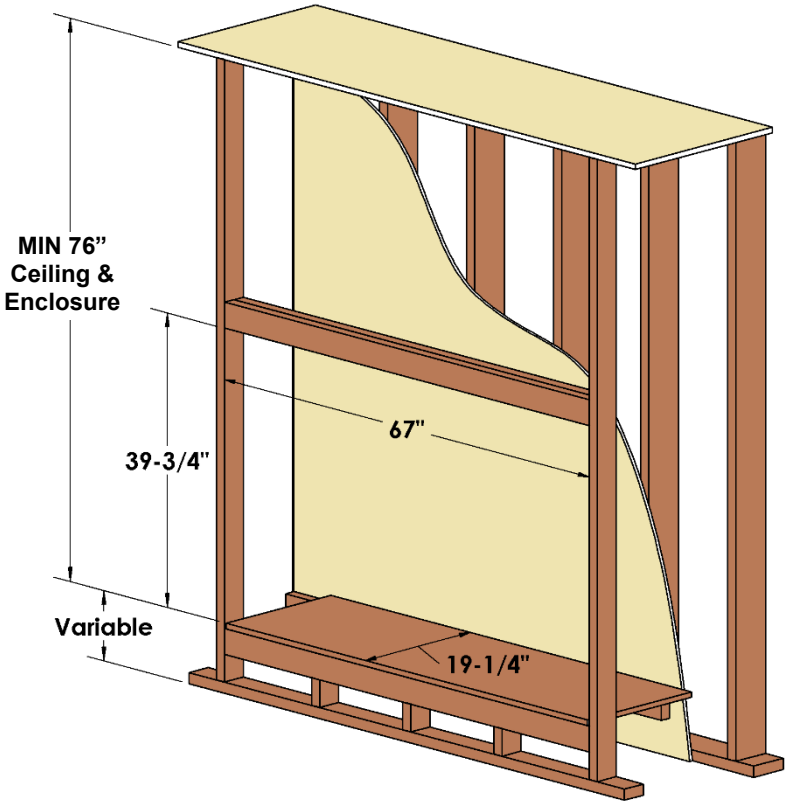


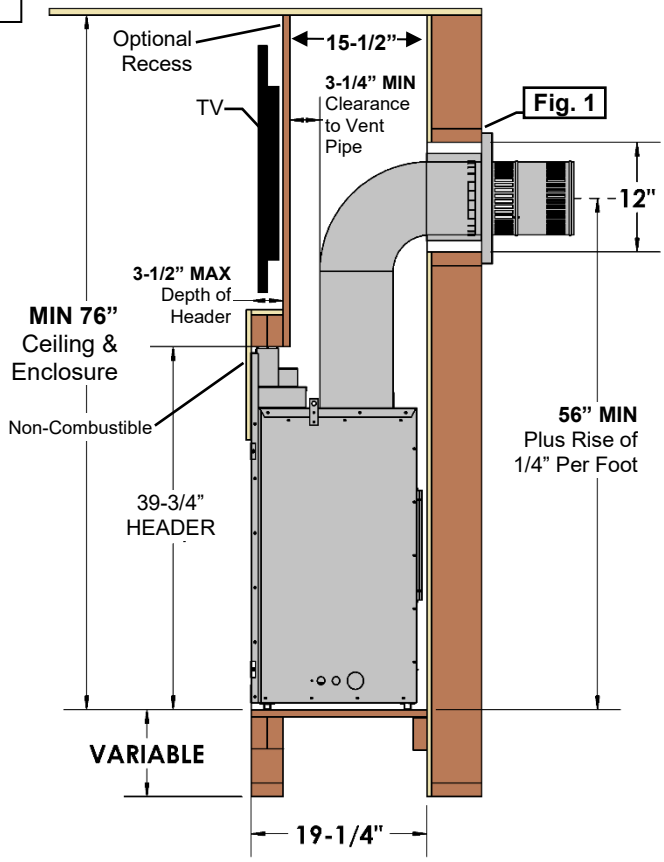


**Vertical Venting MUST maintain 1" clearance to combustibles.**

**Fig.1**
Framing for Horizontal Vent Termination
(See **Installation of Side Wall Venting** Section)

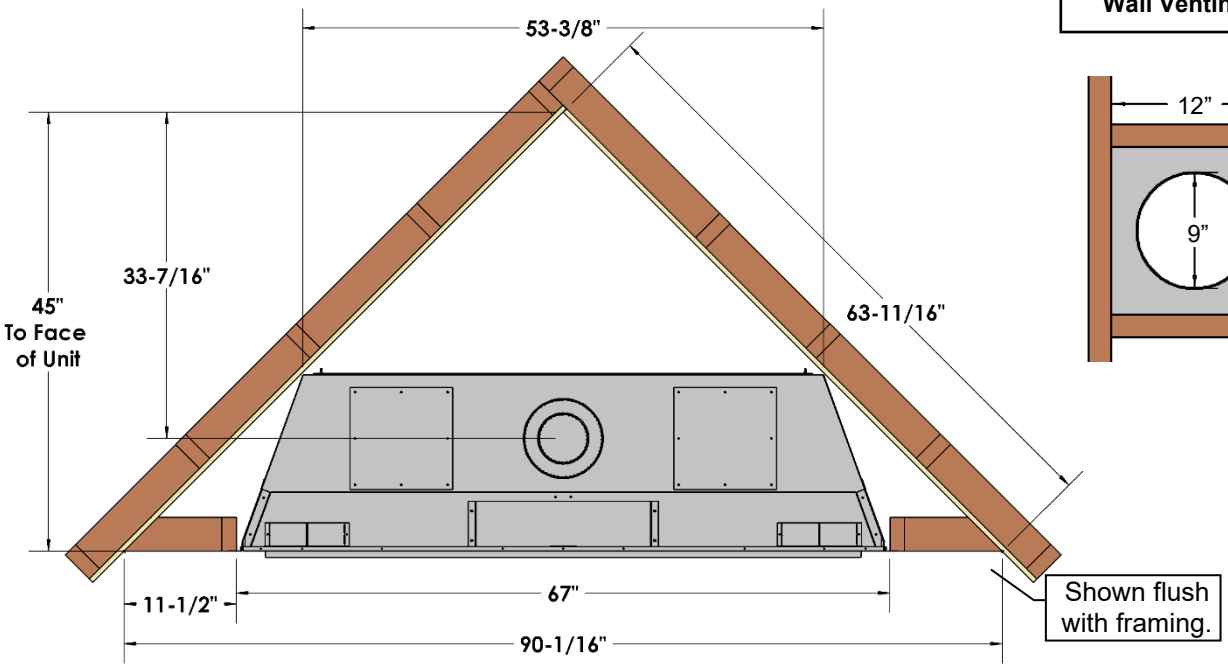


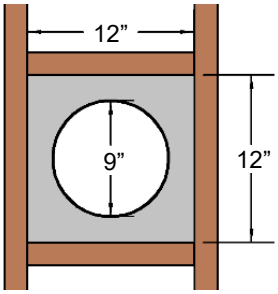

# ZCVRB60 -Clearance to Combustibles –Unvented Chase- Ventilation Plates In Place – As Shipped

| Clearance to Combustibles | ZCVRB60 Unvented Chase |
|---|---|
| Front | 36” [92cm] |
| Back (from Stand-offs) | 0” [0cm] |
| Side (from Stand-offs) | 0” [0cm] |
| Floor | 0” [0cm] |
| Minimum Ceiling Height (from bottom of fireplace) | 76” [193cm] |
| Top (from Stand-offs) | 0” [0cm] |
| Top of 90° Bend in minimum Enclosure of 76” | 4” [10.2cm] |
| Top of 90° Bend in Enclosure over 76” | 4” [10.2cm] |
| **VENTING SYSTEMS** | |
| Top of Horizontal Pipe | 2” [5cm] |
| Side & Bottom of Horizontal Pipe | 1” [2.5cm] All Vent Systems |
| Vertical Vent Pipe | 1” [2.5cm] All Vent Systems |
| An unvented chase requires **non-combustible** covering (i.e., concrete board) over the front face of the appliance. | |

**REFER TO FACING REQUIREMENTS SECTION FOR FACING MATERIALS**

**ELECTRICAL WIRES IN CHASE MUST BE PROPERLY ATTACHED TO INSIDE WALL OF CHASE.**

⚠ **NOTE:** If using insulation in unvented chase (i.e. for outside wall), wall board / drywall is required to support all insulation.

Unvented chase must be clean and free of all debris (i.e. loose insulation, pieces of wood, etc.).

⚠ **NOTE: HEAT CANNOT BE DISCHARGED INTO THE WALLS, FLOOR, OR CEILING.**

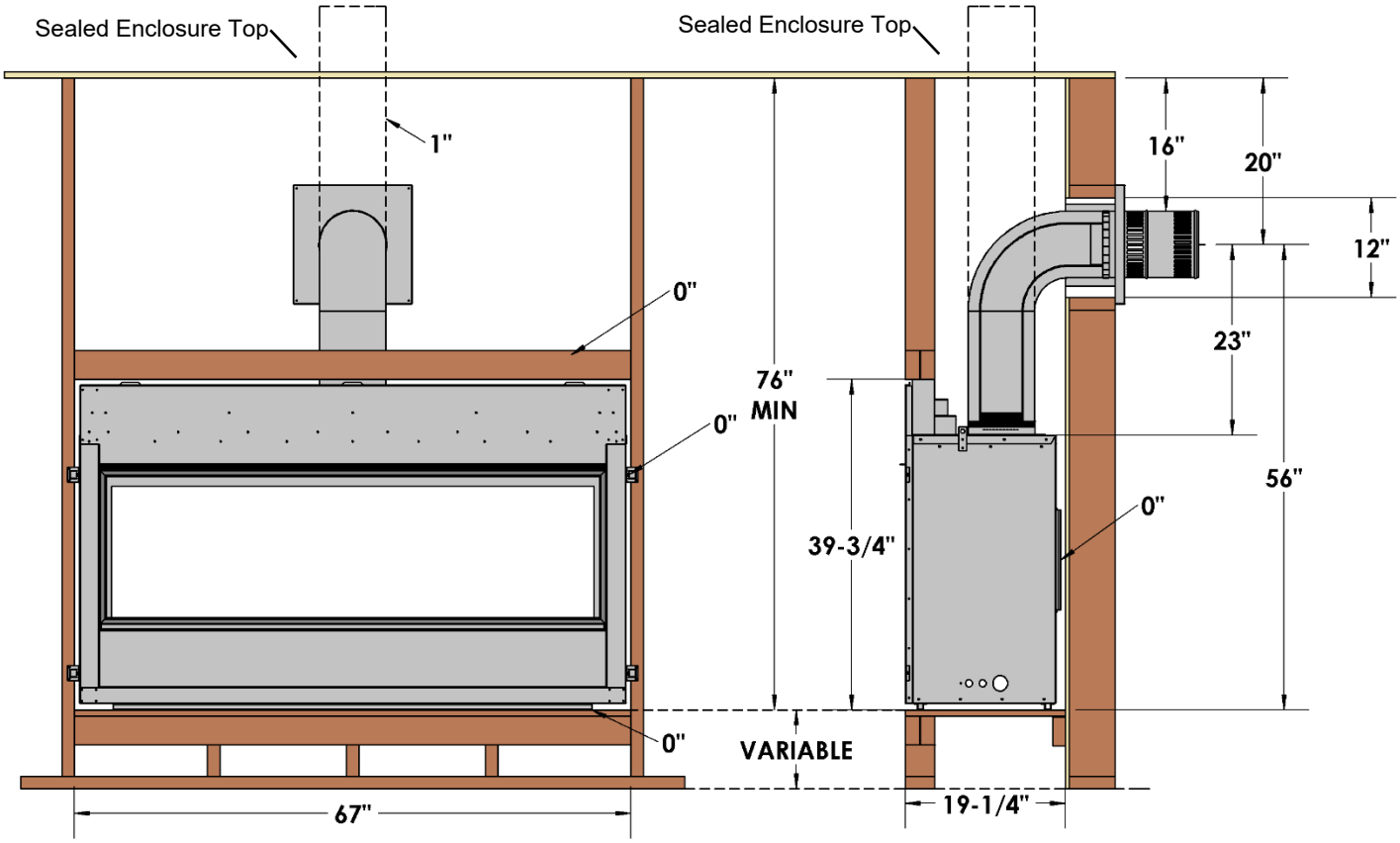

## ZCVRB60 Facing Requirements for Non-Vented Chase
### Fireplace is installed As Shipped, with Ventilation Plates in place.

**ANY MATERIALS COVERING THE FACE OF THE FIREPLACE MUST BE NON-COMBUSTIBLE (I.E., BRICK, STONE, TILE, CONCRETE BOARD) AS SHOWN BELOW.**

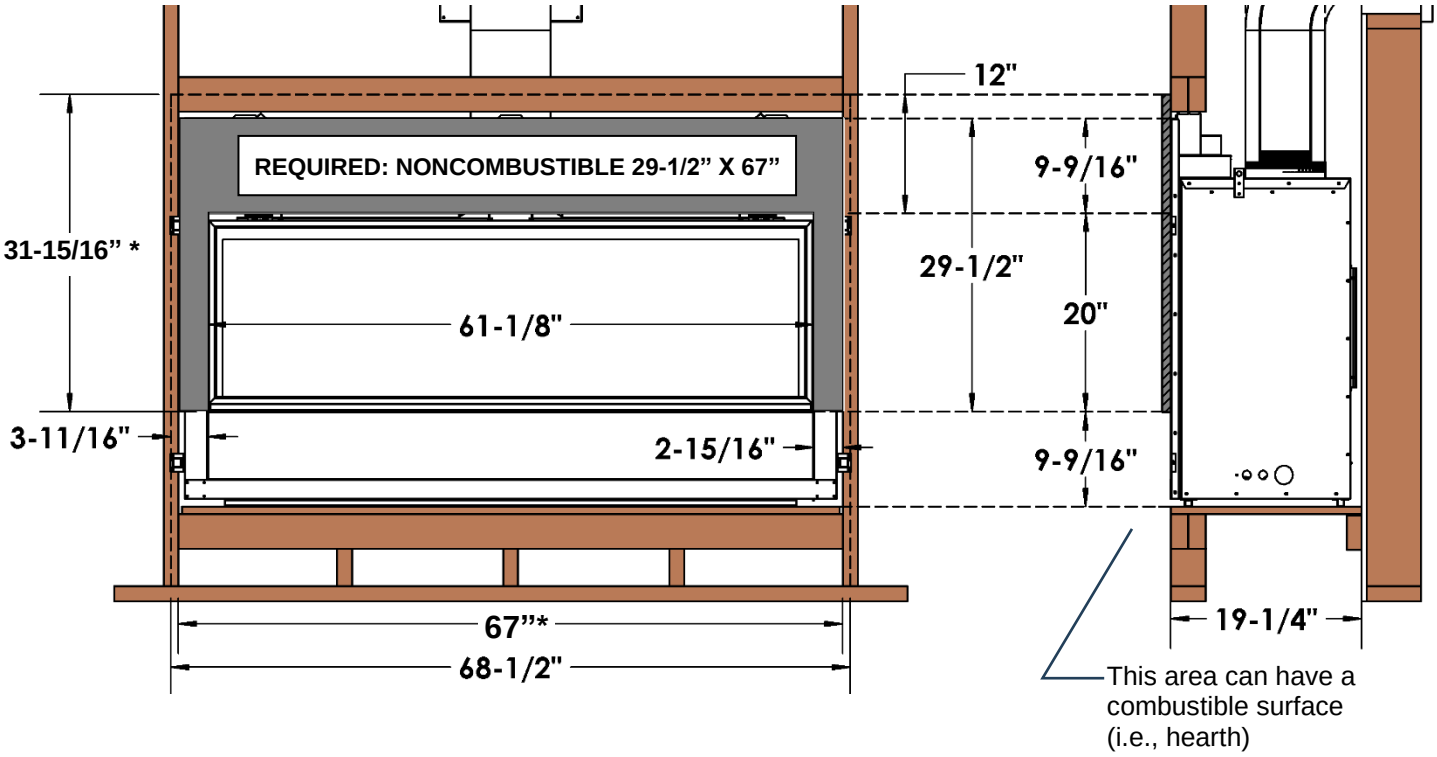


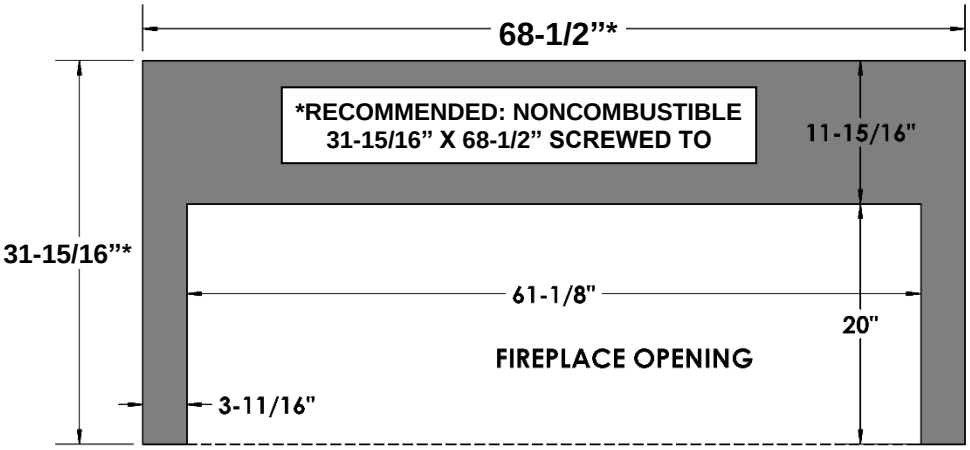


**Note:** Do not drive excessively long screws into the face of the unit as internal parts may be damaged.

## ZCVRB60 -Mantel Clearances –Unvented Chase- Ventilation Plates In Place -As Shipped

Before installing any mantels it is important to determine the combustibility of its material(s). There are two types of mantels to consider: Combustible and Non-Combustible.

A **Combustible Mantel** is one that consists of material(s) that may discolor, combust, or lose its integrity in the presence of heat. These types of mantels must strictly conform to the dimensional requirements shown.

Conversely, a **Non-Combustible Mantel** is one that is constructed with material(s) that will not combust. Check your local codes and regulations to determine whether your mantel is Combustible or Non-Combustible.

The advantage to Non-Combustible Mantels is that it may extend right up to the tile lip of the fireplace. Combustible mantels must adhere to the dimensional restrictions shown.

**⚠-Combustible Objects on Non-Combustible Mantel Warning-**
Combustible objects must not be placed on a Non-combustible Mantel unless the mantel meets the dimensional requirements for a Combustible Mantel. Determine whether your mantel conforms to the requirements of a Combustible Mantel.

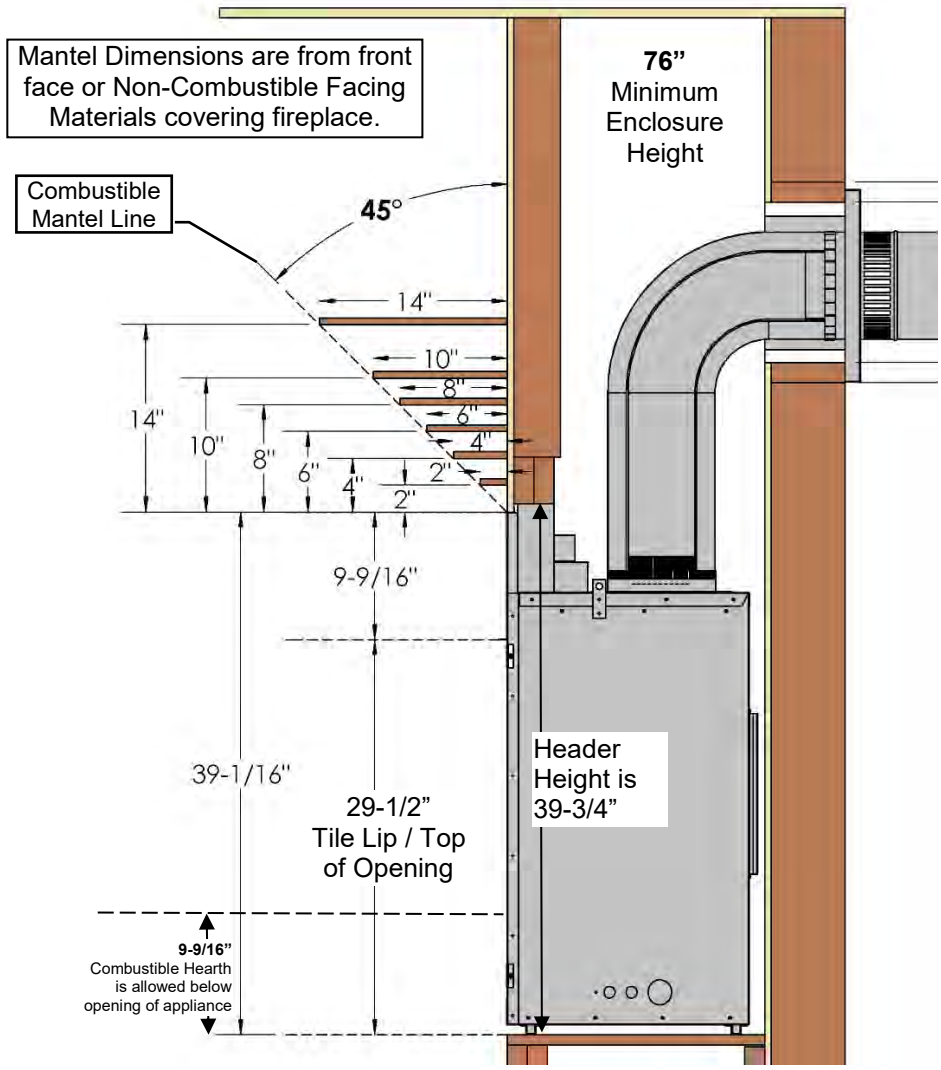


## Mantel Leg Clearances

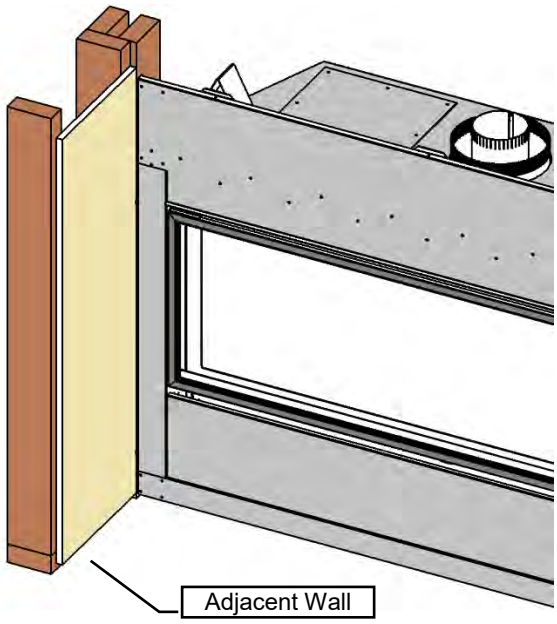


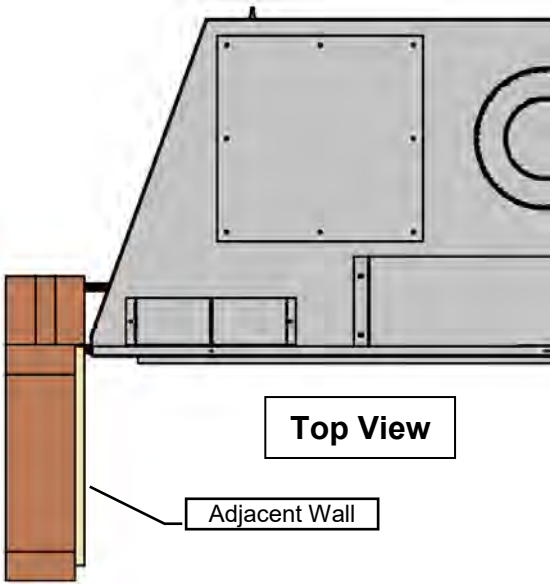

## ZCVRB60 -Vented Chase –Removal of Ventilation Plates- See Framing for Vented Chase

⚠ **CAUTION:** Ventilation Plates must be removed before ZCVRB60 is installed into a Vented Chase.

**STEP 1:** Remove [Qty 2] Outer Top Covers.

**STEP 2:** Remove [Qty 2] Ventilation Plates inside opening.

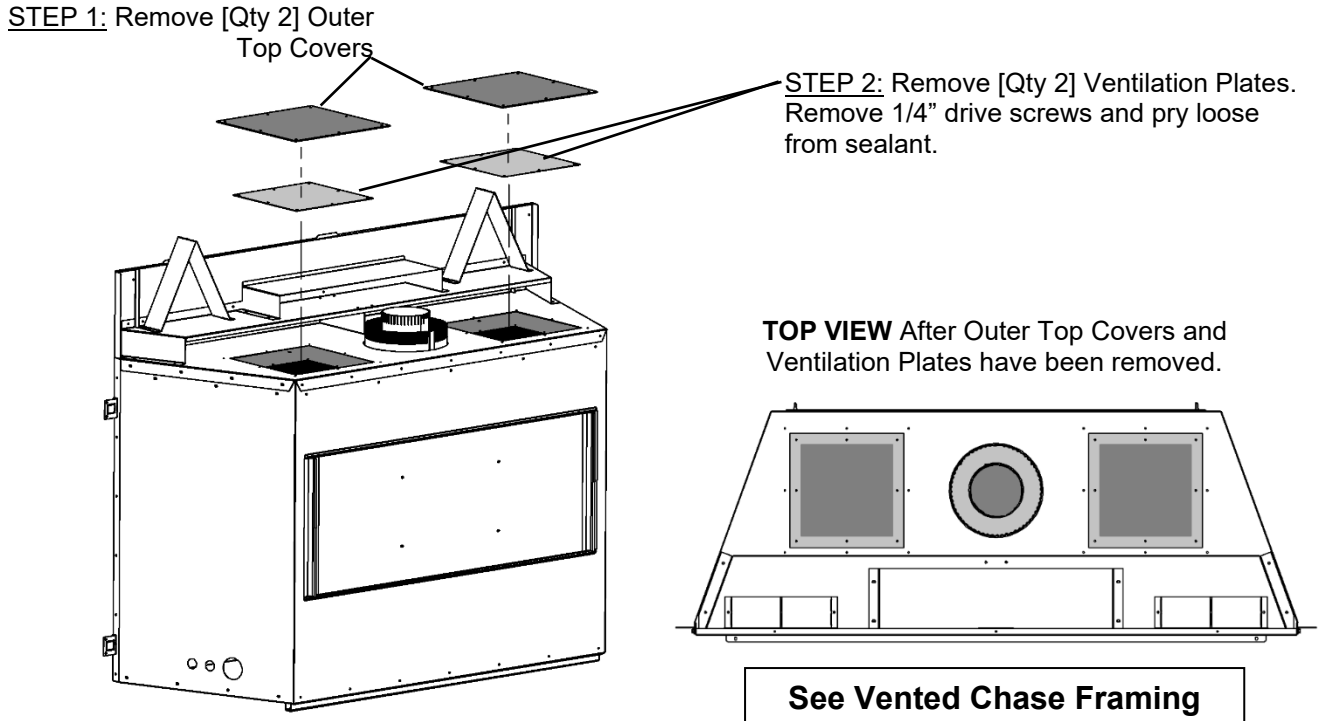


**See Vented Chase Framing Section**

## Kingsman Enclosure Grills – Serene Series Fireplaces – ZCVRB47 & ZCVRB60

Serene Series Units are designed to work with specific Kingsman Enclosure Grills when installed into a Vented Chase:

- **ZCVRB47** - **V46EG** or **VL60EGS** Enclosure Grills.
- **ZCVRB60** - **VL60EG** or **VL60EGS** Enclosure Grills.

If desired, some other Kingsman Enclosure Grills can also be used. Refer to the chart below.

| | - GRILLS - | | | | | |
|---|---|---|---|---|---|---|
| | **VL60EGS** 220 Sq. In. Total Set of 2 Grills | **VL72EGS** 285 Sq. In. Total Set of 2 Grills | **V46EG** 122 Sq. In. | **VL48EG** 176 Sq. In. | **VL60EG** 220 Sq. In. | **VL72EG** 285 Sq. In. |
| **Required Opening:** | 6-5/8" x 15-1/4" Each | 9" x 15-1/4" Each | 2-5/8" x 46-3/4 | 3-5/8" x 48-5/8" | 3-5/8" x 60-5/8" | 3-5/8" x 78-5/8" |
| **FIREPLACES** | | | | | | |
| ZCVRB47 | **IN MANUAL** | ✓ | **IN MANUAL** | ✓ | ✓ | ✓ |
| ZCVRB60 | **IN MANUAL** | ✓ | NA | NA | **IN MANUAL** | ✓ |

✓ = GRILL CAN BE USED

NA = NOT APPLICABLE

## ZCVRB60 -Framing Dimensions –Vented Chase – VL60EG Grill – Ventilation Plates Must Be Removed

Determine whether face of fireplace will be:

- Flush with finished wall (e.g., for surround, cultured stone, or other covering).
- Flush with framing (for a Flat Wall appearance).

Refer to Nailing Tab Guide section also.

**These structures are not load-bearing.**

**Opening for VL60EG Grill:** 60-5/8" x 3-5/8" **Opening must be within 3/4" of Sealed Enclosure Top.**

**HEAT CANNOT BE DISCHARGED INTO THE WALLS, FLOOR, OR CEILING.** Heat must exit through the required vented chase opening near the ceiling. If using insulation in vented chase (i.e. for outside wall), wall board / drywall is required to support all insulation. Vented chase must be clean and free of all debris (i.e. loose insulation, pieces of wood, etc.).

**ELECTRICAL WIRES IN CHASE MUST BE PROPERLY ATTACHED TO INSIDE WALL OF CHASE.**

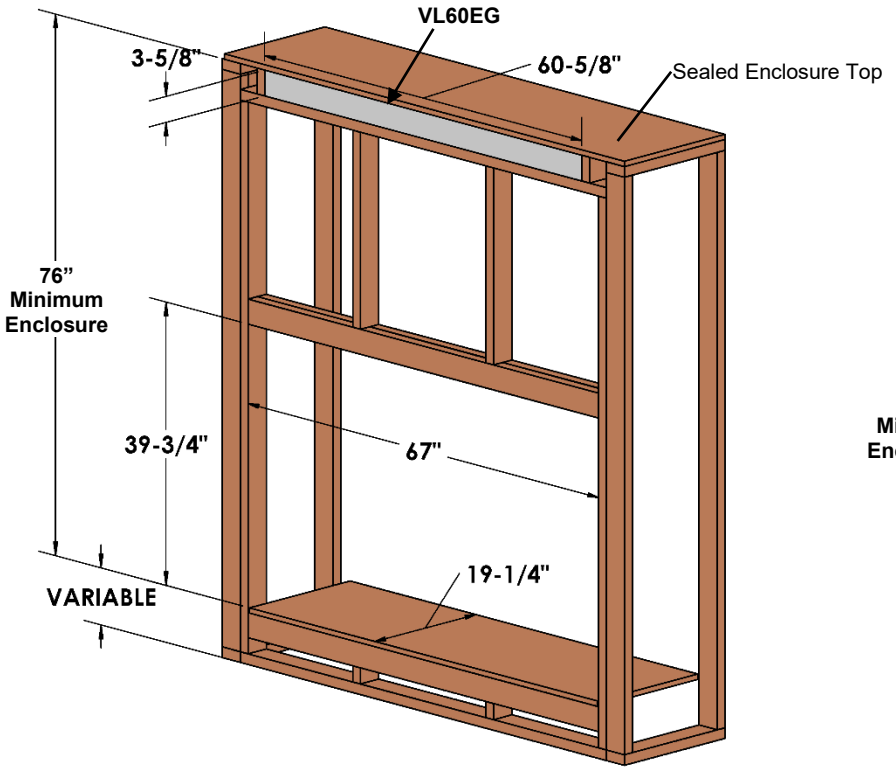


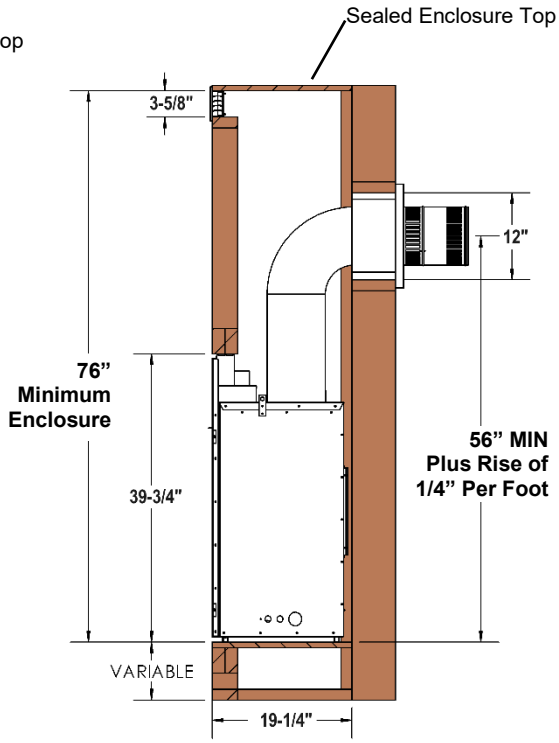


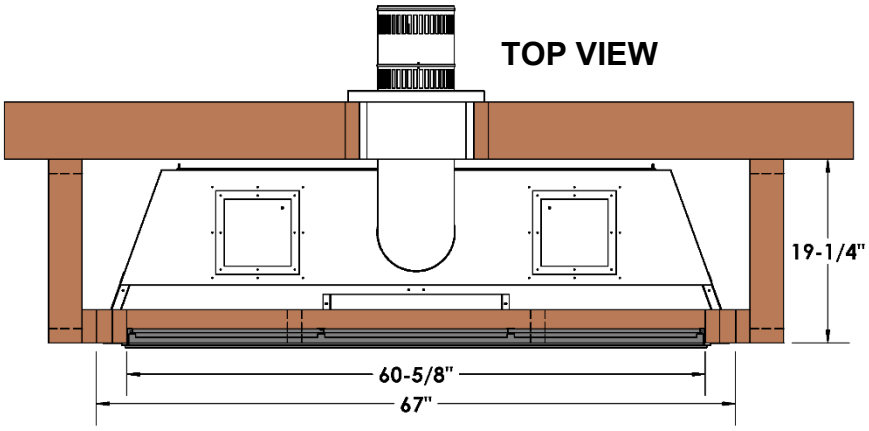


**Vertical Venting MUST maintain 1" clearance to combustibles.**

Framing for Vent Termination (See **Venting** Section)

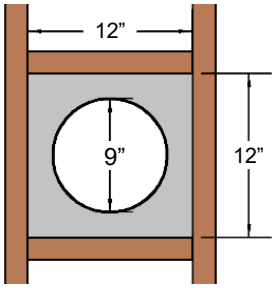

## ZCVRB60 -Framing Dimensions –Vented Chase – VL60EGS Side Grills – Ventilation Plates Must Be Removed

Determine whether face of fireplace will be:

- Flush with finished wall (e.g., for surround, cultured stone, or other covering).
- Flush with framing (for a Flat Wall appearance).

Refer to Nailing Tab Guide section also.

**These structures are not load-bearing.**

**For VL60EGS Grills:** [2] 6-5/8" x 15-1/4" Openings must be within 3/4" of Sealed Enclosure Top.

**HEAT CANNOT BE DISCHARGED INTO THE WALLS, FLOOR, OR CEILING.** Heat must exit through the required vented chase opening near the ceiling. If using insulation in vented chase (i.e. for outside wall), wall board / drywall is required to support all insulation. Vented chase must be clean and free of all debris (i.e. loose insulation, pieces of wood, etc.).

**ELECTRICAL WIRES IN CHASE MUST BE PROPERLY ATTACHED TO INSIDE WALL OF CHASE.**

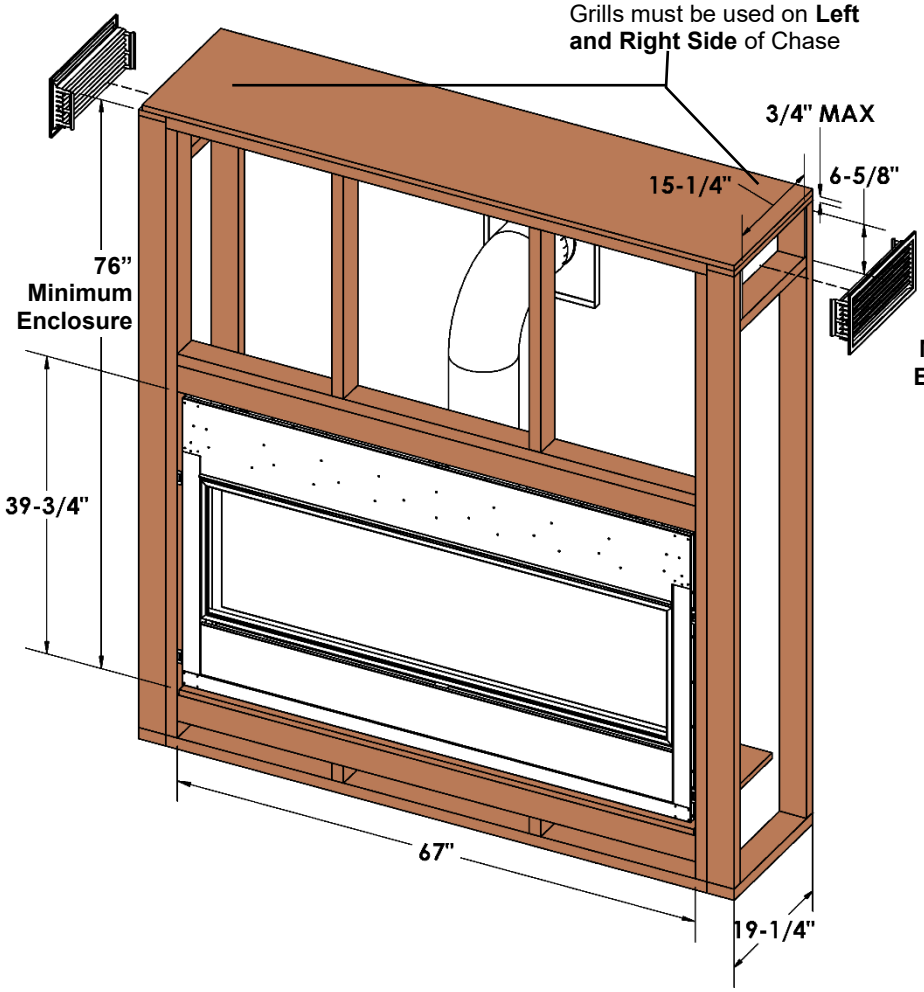


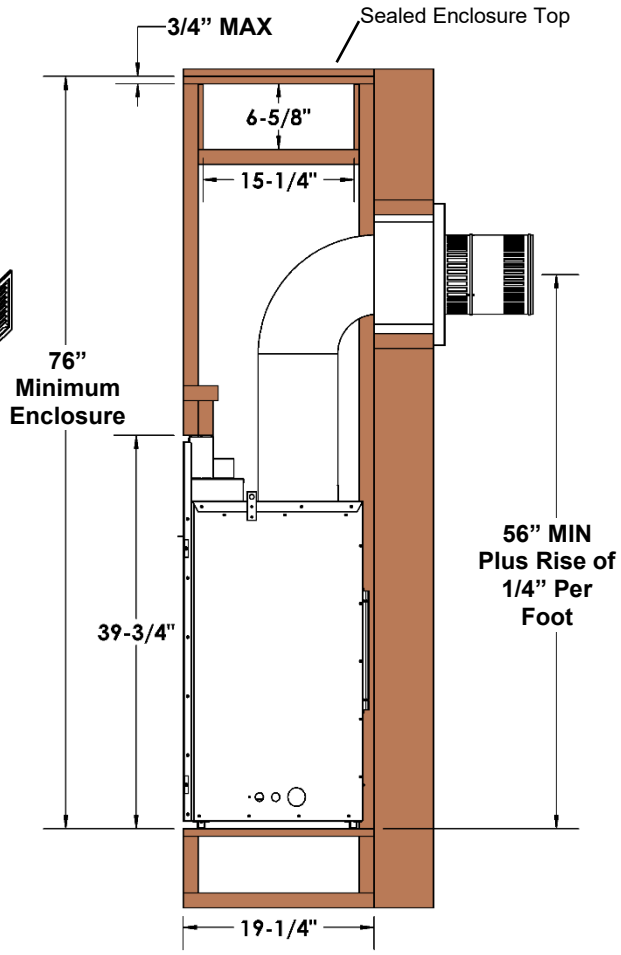


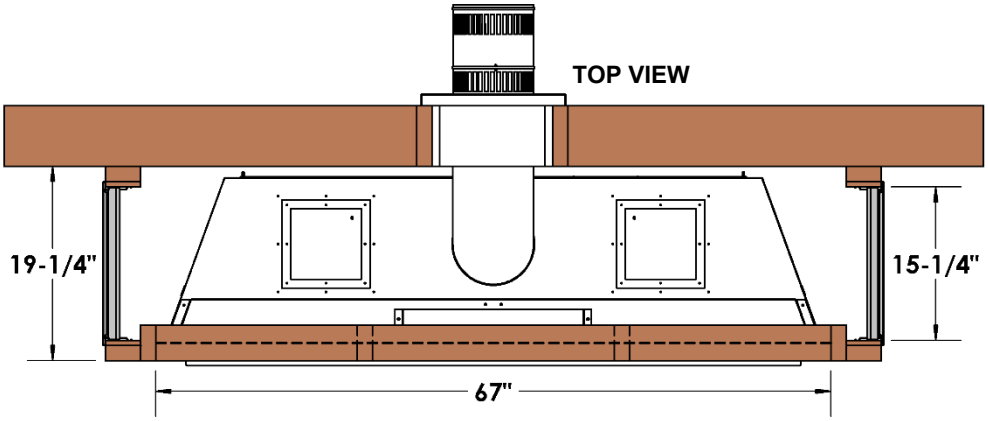


**Vertical Venting MUST maintain 1" clearance to combustibles.**

Framing for Vent Termination (See **Venting** Section)

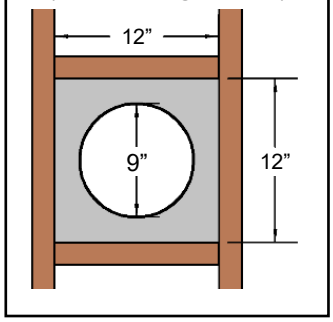

# ZCVRB60 -Framing Dimensions –Vented Chase – Open Top – Ventilation Plates Must Be Removed

Determine whether face of fireplace will be:

- Flush with finished wall (e.g., for surround, cultured stone, or other covering).
- Flush with framing (for a Flat Wall appearance).

Refer to Nailing Tab Guide section also.

**These structures are not load-bearing.**

**1-7/8" Opening must be on 3 sides of the top of the fireplace chase. MIN 200 Square inches**

**HEAT CANNOT BE DISCHARGED INTO THE WALLS, FLOOR, OR CEILING.** Heat must exit through the required vented chase opening near the ceiling. If using insulation in vented chase (i.e. for outside wall), wall board / drywall is required to support all insulation. Vented chase must be clean and free of all debris (i.e. loose insulation, pieces of wood, etc.).

**ELECTRICAL WIRES IN CHASE MUST BE PROPERLY ATTACHED TO INSIDE WALL OF CHASE.**

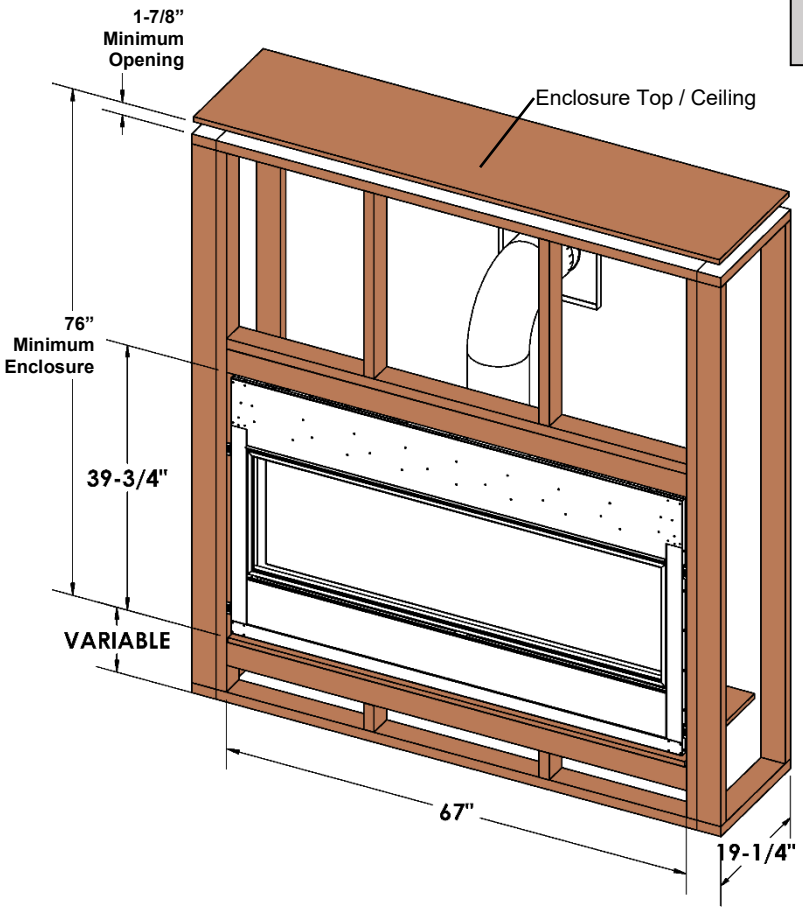


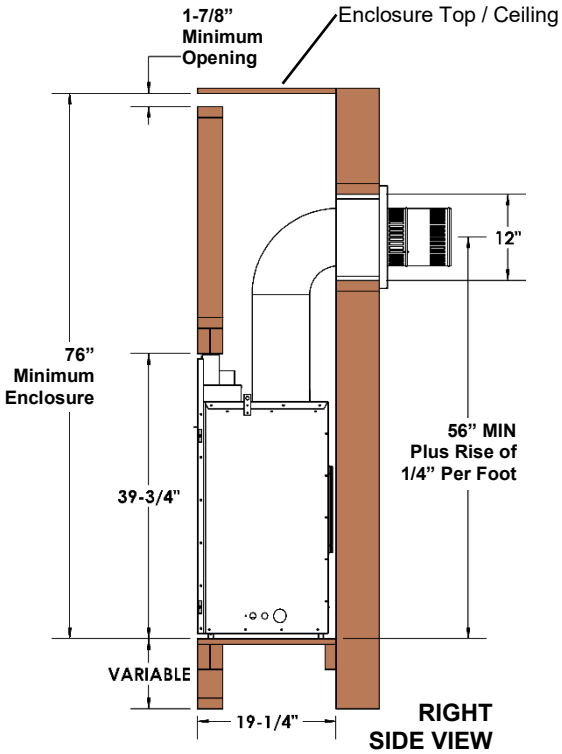


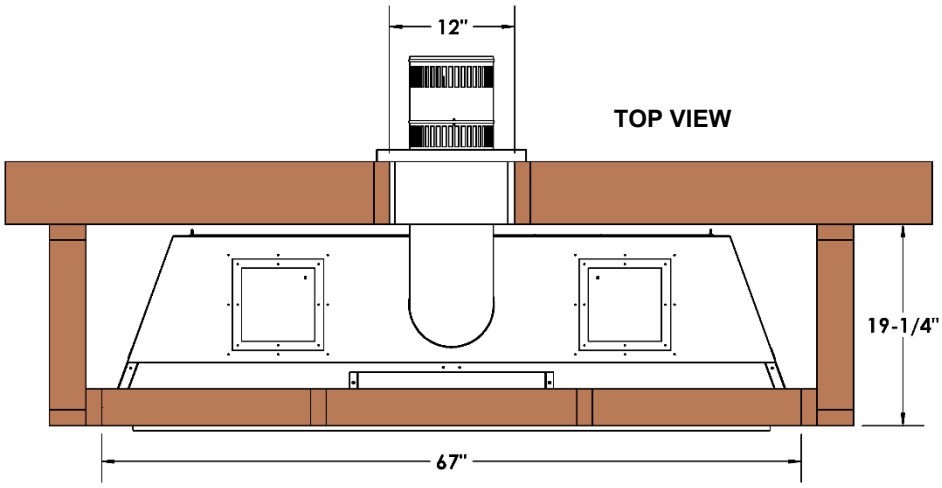


**Vertical Venting MUST maintain 1" clearance to combustibles.**

Framing for Vent Termination (See **Venting** Section)

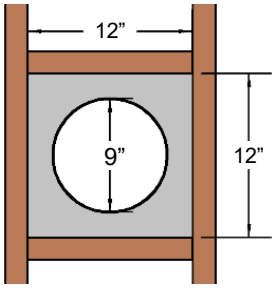

## ZCVRB60 – Vented Chase - Optional Recessed Cavity Dimensions

- Recessed Cavity may begin immediately above top header (i.e. 4” for 2 x 4 with drywall).
- Television should be minimum 1” away from opening of Vented Chase.

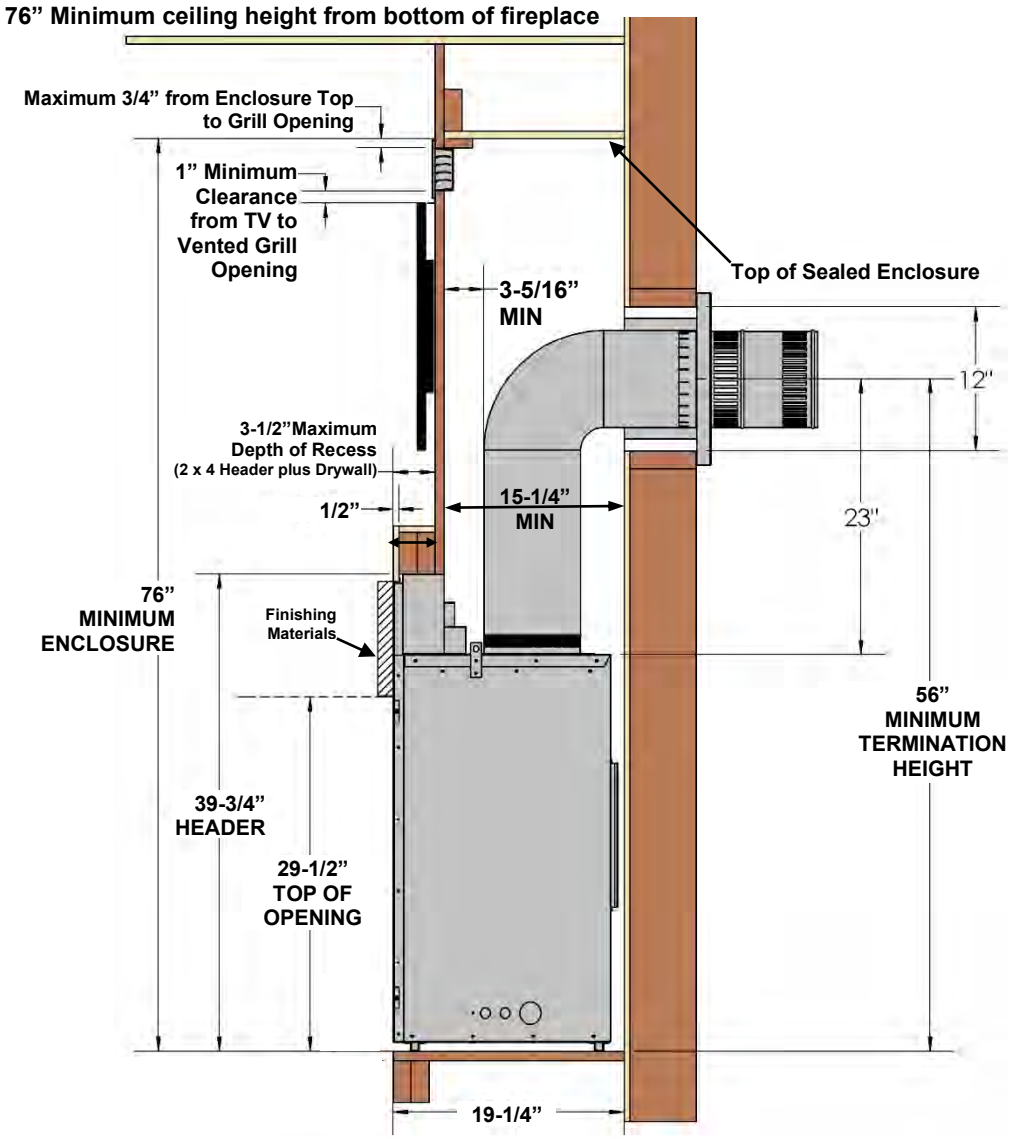


**VENTED CHASE: COMBUSTIBLE OVER FACE OF APPLIANCE IS ALLOWED.**

**HEAT CANNOT BE DISCHARGED INTO THE WALLS, FLOOR, OR CEILING. Heat must exit through the required vented chase opening near the ceiling.**

**If using insulation in vented chase (i.e. for outside wall), wall board / drywall is required to support all insulation.**

**Vented chase must be clean and free of all debris (i.e. loose insulation, pieces of wood, etc.).**

**Notice:** Granite, tile, or other facing materials are not covered by the fireplace warranty. Natural stone, tile, and other facing materials may crack or discolor (i.e. yellowing of lighter colored materials).

**NOTE: THESE ISSUES CAN BE AVOIDED IF THE CHASE IS VENTED.**

**Televisions are not covered by fireplace warranty.**

# ZCVRB60 -Clearance to Combustibles –Vented Chase -Ventilation Plates Removed-

| Clearance to Combustibles ZCVRB60 Vented Chase | |
|---|---|
| Front | 36” [92cm] |
| Back (from Stand-offs) | 0” [0cm] |
| Side (from Stand-offs) | 0” [0cm] |
| Floor | 0” [0cm] |
| Minimum Ceiling Height (from bottom of fireplace) | 76” [193cm] |
| Top (from Stand-offs) | 0” [0cm] |
| Top of 90° Bend in minimum Enclosure of 76” | 4” [10.2cm] |
| Top of 90° Bend in Enclosure over 76” | 4” [10.2cm] |
| **VENTING SYSTEMS** | |
| Top of Horizontal Pipe | 2” [5cm] |
| Side & Bottom of Horizontal Pipe | 1” [2.5cm] All Vent Systems |
| Vertical Vent Pipe | 1” [2.5cm] All Vent Systems |
| **Vented Enclosure:** Materials covering the face of the fireplace may be combustible. | |
| **REFER TO FACING REQUIREMENTS SECTION FOR FACING MATERIALS** | |

**ELECTRICAL WIRES IN CHASE MUST BE PROPERLY ATTACHED TO INSIDE WALL OF CHASE.**

⚠ **NOTE:** If using insulation in vented chase (i.e. for outside wall), wall board / drywall is required to support all insulation.

Vented chase must be clean and free of all debris (i.e. loose insulation, pieces of wood, etc.).

⚠ **NOTE: HEAT CANNOT BE DISCHARGED INTO THE WALLS, FLOOR, OR CEILING.** Heat must exit through the required vented chase opening near the ceiling.

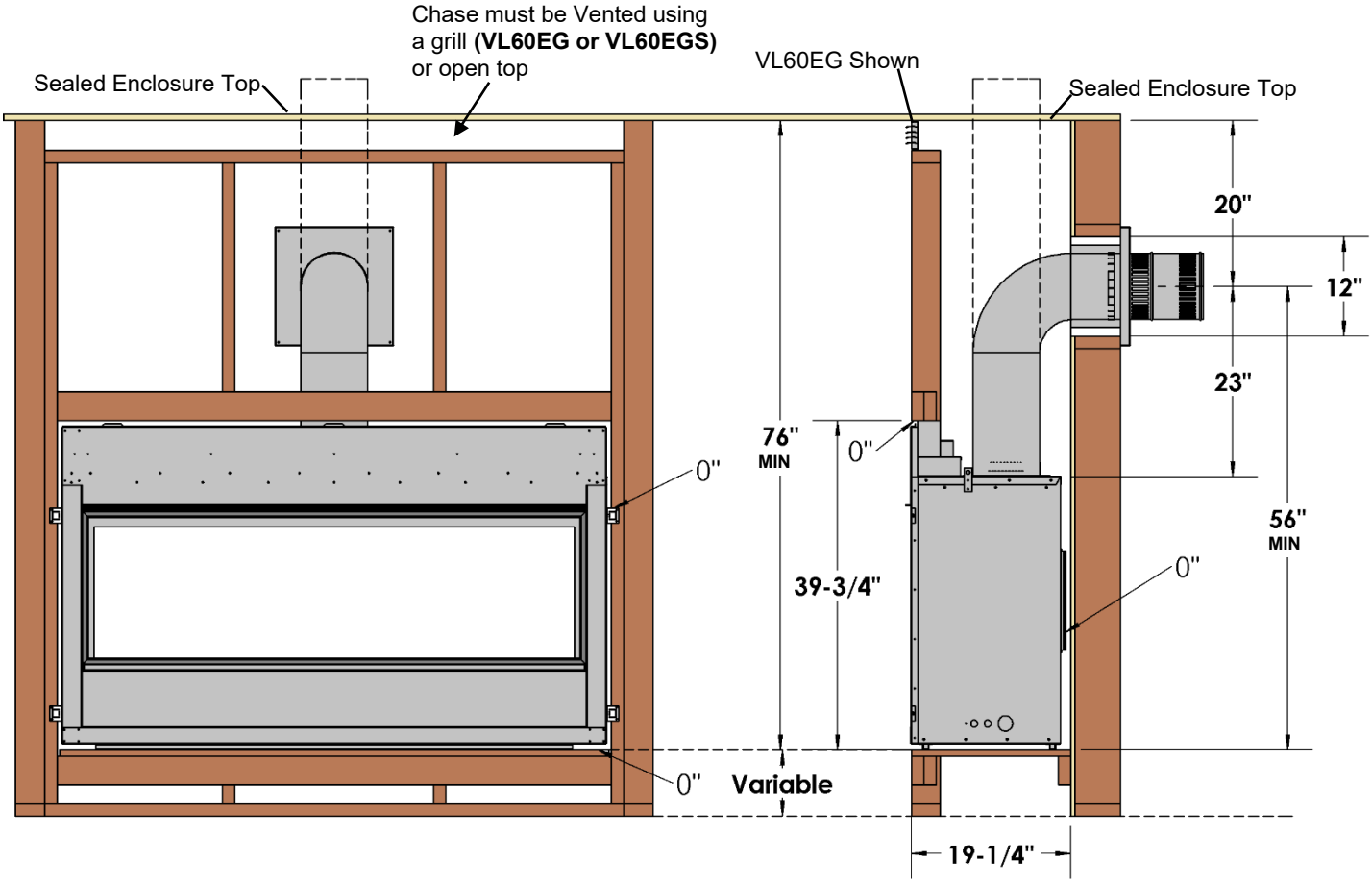

# ZCVRB60 -Mantel Clearances –Vented Chase -Ventilation Plates Removed

Before installing any mantels it is important to determine the combustibility of its material(s). There are two types of mantels to consider: Combustible and Non-Combustible.

A **Combustible Mantel** is one that consists of material(s) that may discolor, combust, or lose its integrity in the presence of heat. These types of mantels must strictly conform to the dimensional requirements shown.

Conversely, a **Non-Combustible Mantel** is one that is constructed with material(s) that will not combust. Check your local codes and regulations to determine whether your mantel is Combustible or Non-Combustible.

The advantage to Non-Combustible Mantels is that it may extend right up to the tile lip of the fireplace. Combustible mantels must adhere to the dimensional restrictions shown.

**⚠ -Combustible Objects on Non-Combustible Mantel Warning-**
Combustible objects must not be placed on a Non-combustible Mantel unless the mantel meets the dimensional requirements for a Combustible Mantel. Determine whether your mantel conforms to the requirements of a Combustible Mantel.

**VENTED CHASE:** COMBUSTIBLE OVER FACE OF APPLIANCE IS ALLOWED.

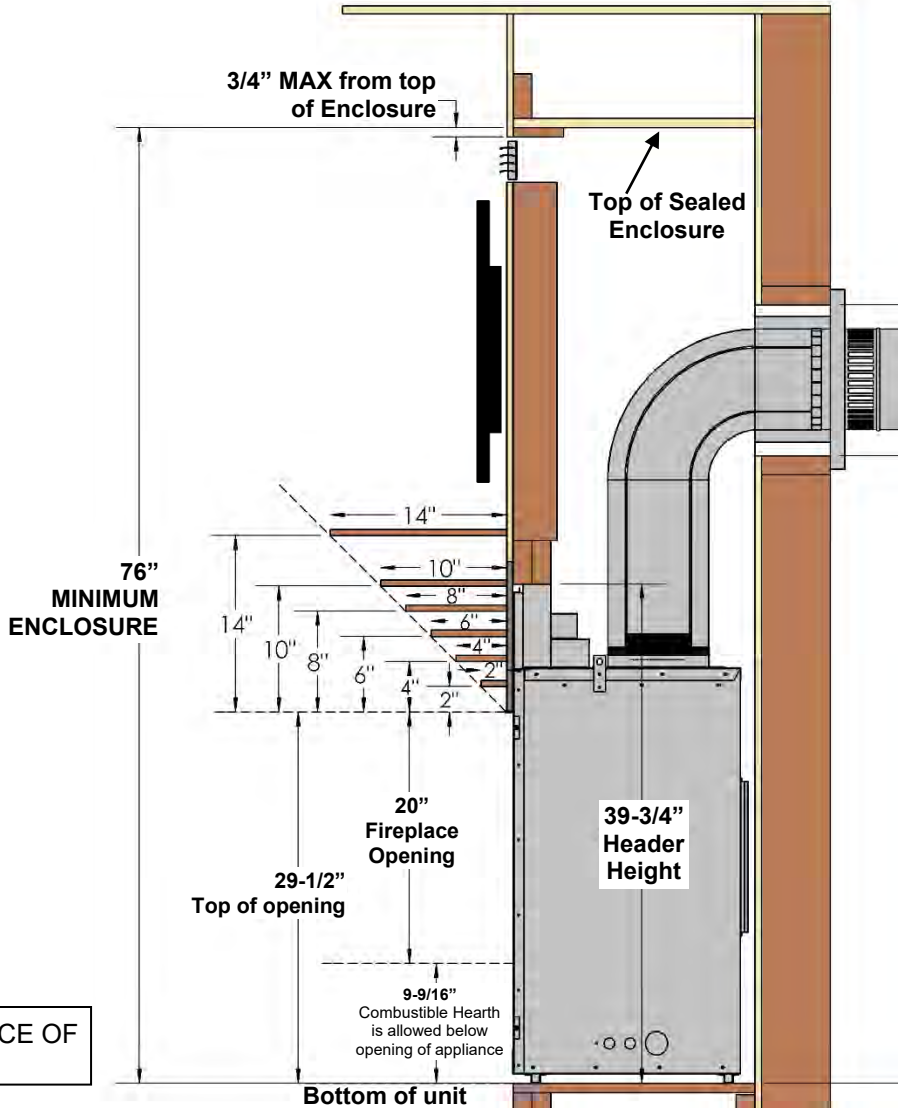


⚠ **NOTE:** If using insulation in vented chase (i.e. for outside wall), wall board / drywall is required to support all insulation.

Vented chase must be clean and free of all debris (i.e. loose insulation, pieces of wood, etc.).

⚠ **NOTE: HEAT CANNOT BE DISCHARGED INTO THE WALLS, FLOOR, OR CEILING.** Heat must exit through the required vented chase opening near the ceiling.

## Mantel Leg Clearances

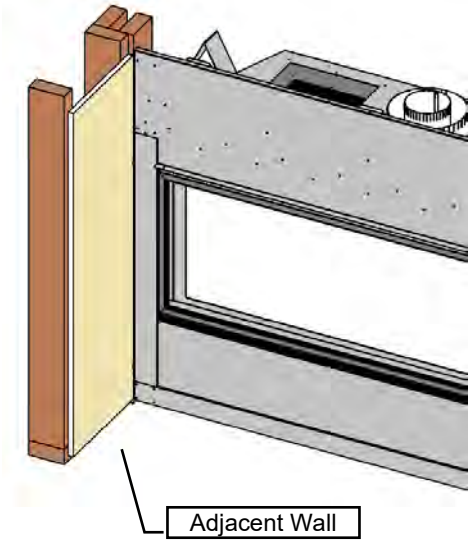


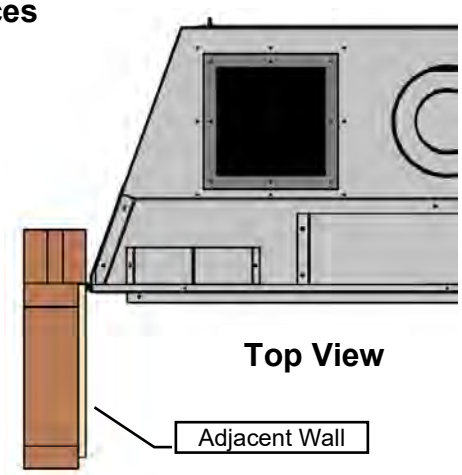

# Approved Kingsman Grill Options for ZCVRB60 Vented Chase Installations - VL60EG Front Grill and VL60EGS Side Grills –

⚠ **Grill openings must be flush with or within 3/4” of enclosure top. This is to prevent excess heat from becoming trapped in the top of the chase. See framing section of manual.**

**VL60EG Front Grill –** Opening size: 3-5/8” x 60-5/8”

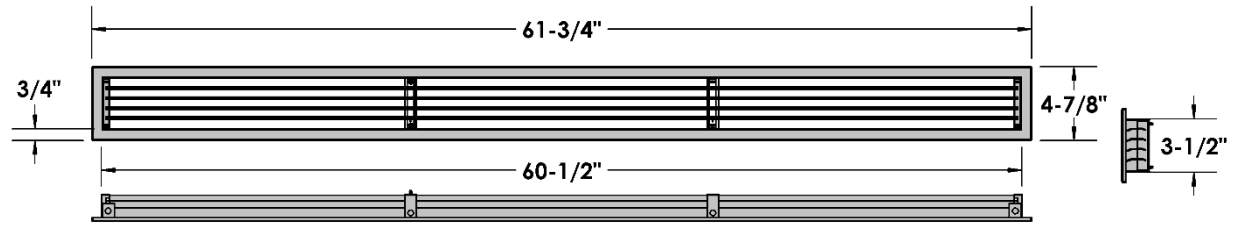


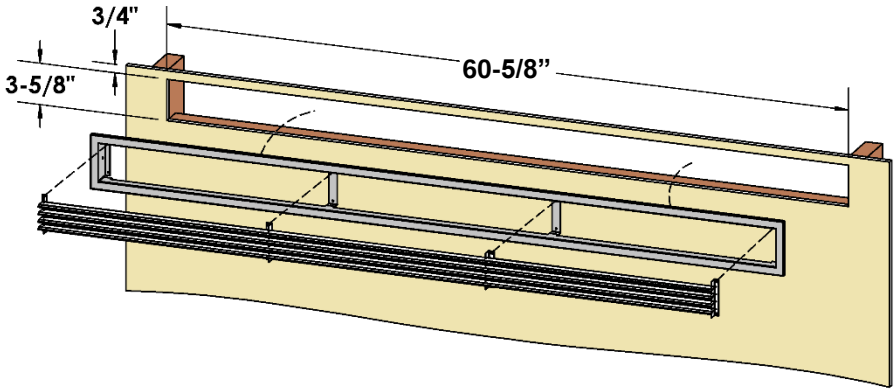


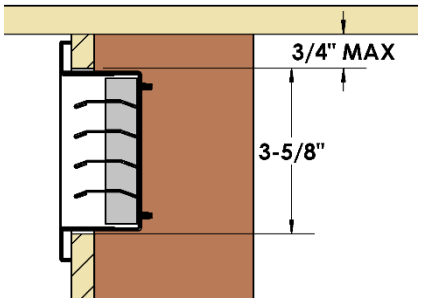


**VL60EGS Side Grills –** Set of 2 Side Grills. Opening Size: 6-5/8” x 15-1/4”

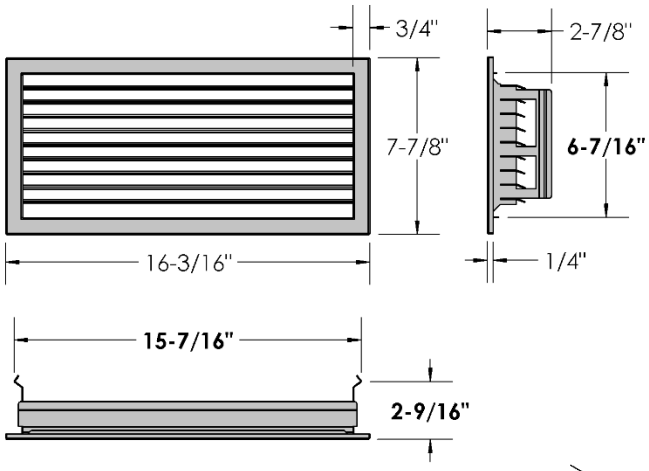


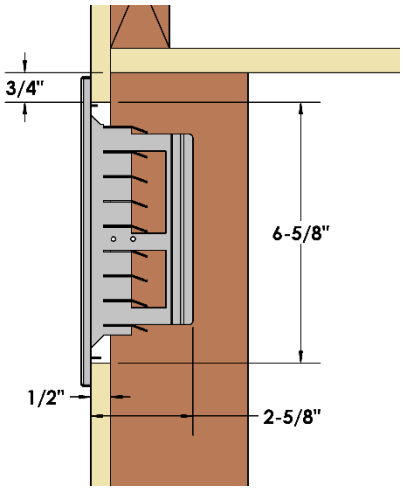


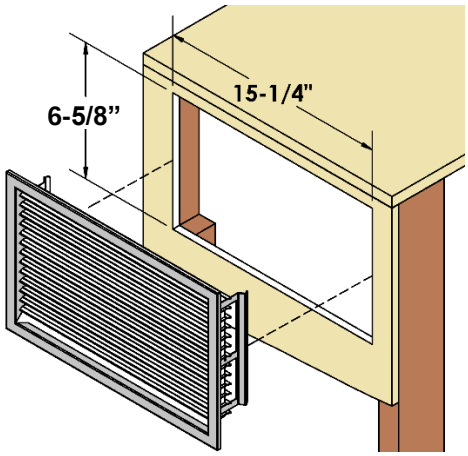

**ZCVRB60 Tile Lip Kit (V60PTLK):**

-1 Bottom Piece
-2 Sides
- [Qty] 11 Pan Head DT Screws

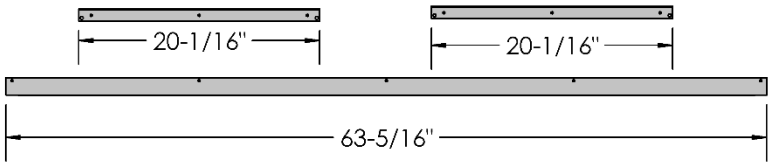


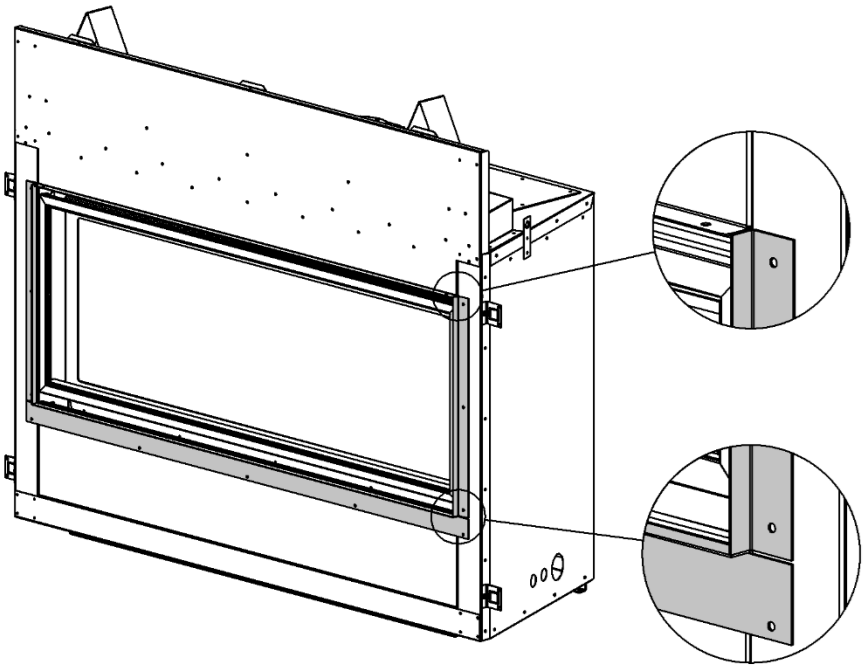

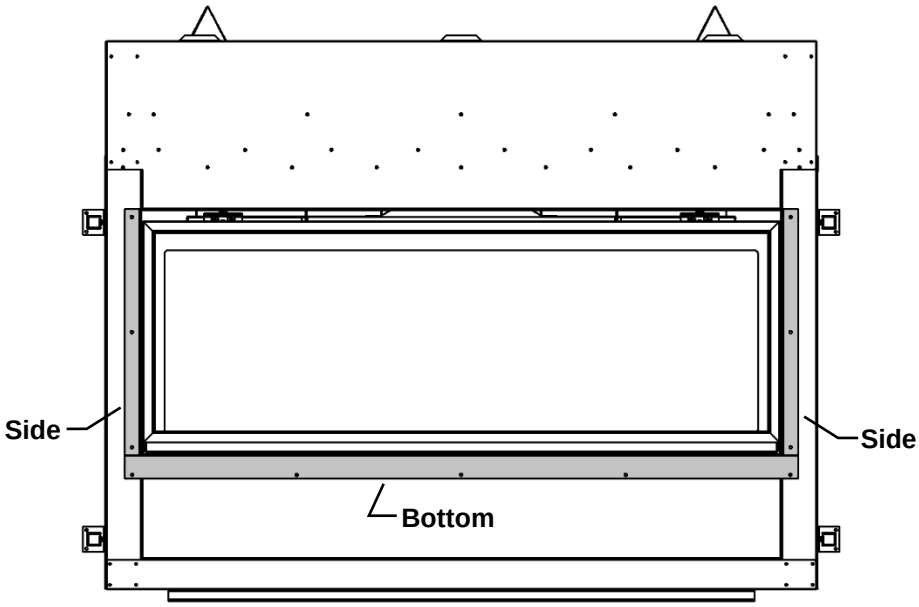


**SIDE VIEW**

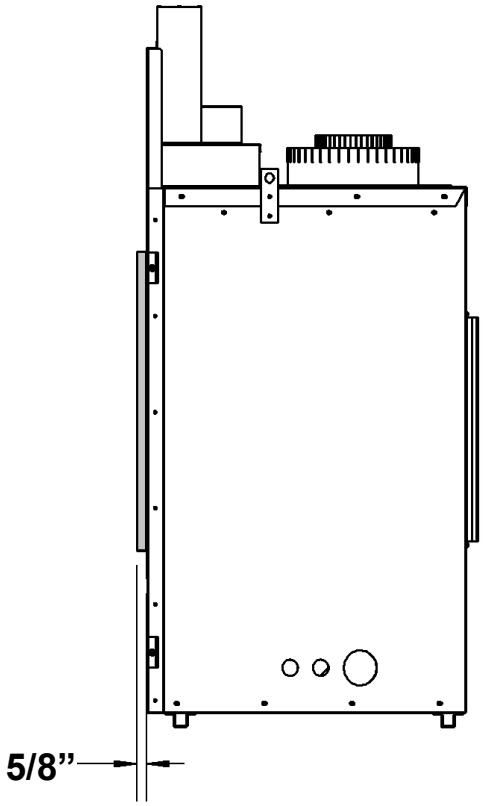

## ZCVRB60S1BL / ZCV60S1SS Surround Dimensions

- Surround Frames are 3/4” thick, by 1-1/2” wide.
- Gap between surround and face of fireplace is adjustable- 5/8”, 7/8”, or 1-1/8”- determined by which mount-hole is used.
- The Fireplace face may be covered with non-combustibles up to 1” in depth.

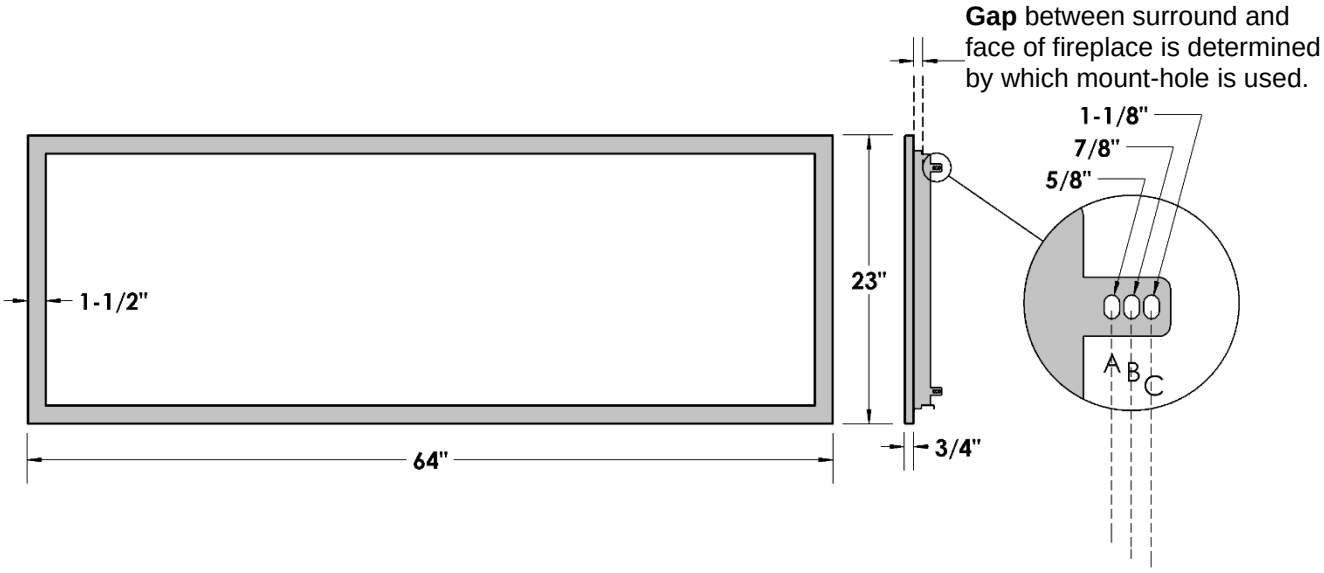


## ZCVRB60 Surround Clearances

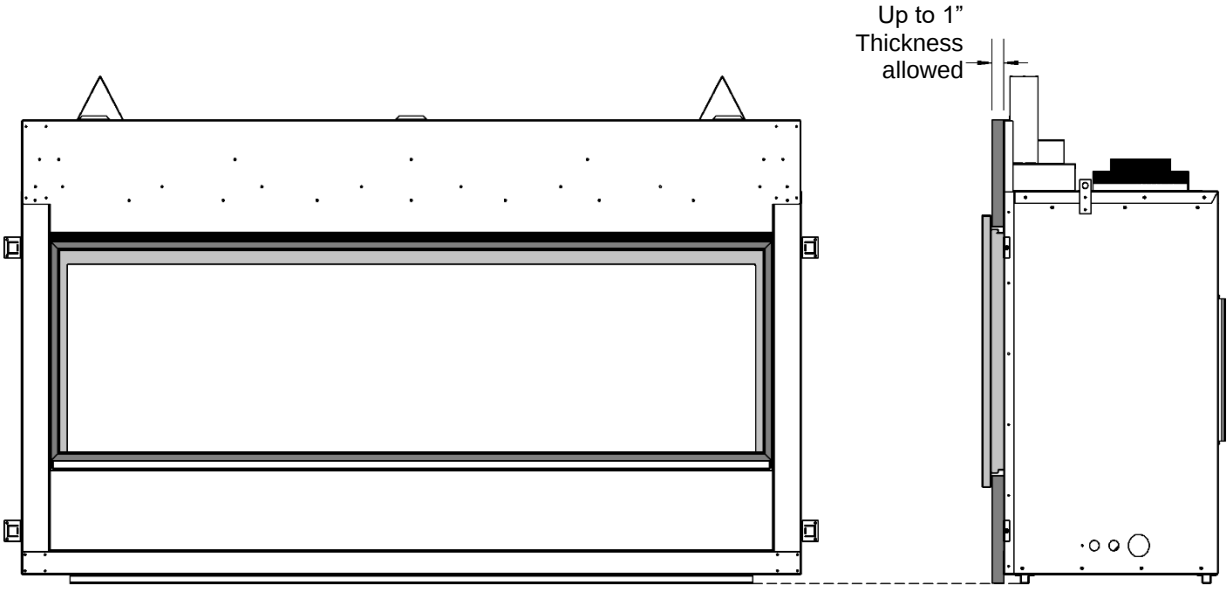

# ZCVRB60 Surround Installation

**Surrounds:** ZCVRB60S1BL (Black)**,** ZCVRB60S1SS (Stainless Steel)
**Dimensions:** (64”W x 23”H)

**Each kit contains:** (Qty-1) Surround

- Surround Frames are 3/4” thick, by 1-1/2” wide.
- Gap between surround and face of fireplace is variable- 5/8”, 7/8”, or 1-1/8”- determined by which mount hole is used.
- The Fireplace may be covered with non-combustibles up to the fireplace opening.

**⚠ NOTES**:

- Cotton gloves **must** be worn to protect the finish during installation and handling.
- All hand and finger marks **must** be cleaned off with a soft cloth and light detergent prior to applying heat to the unit.
- Stainless panels may discolour a little during normal operation. This is normal and should not be considered a defect.

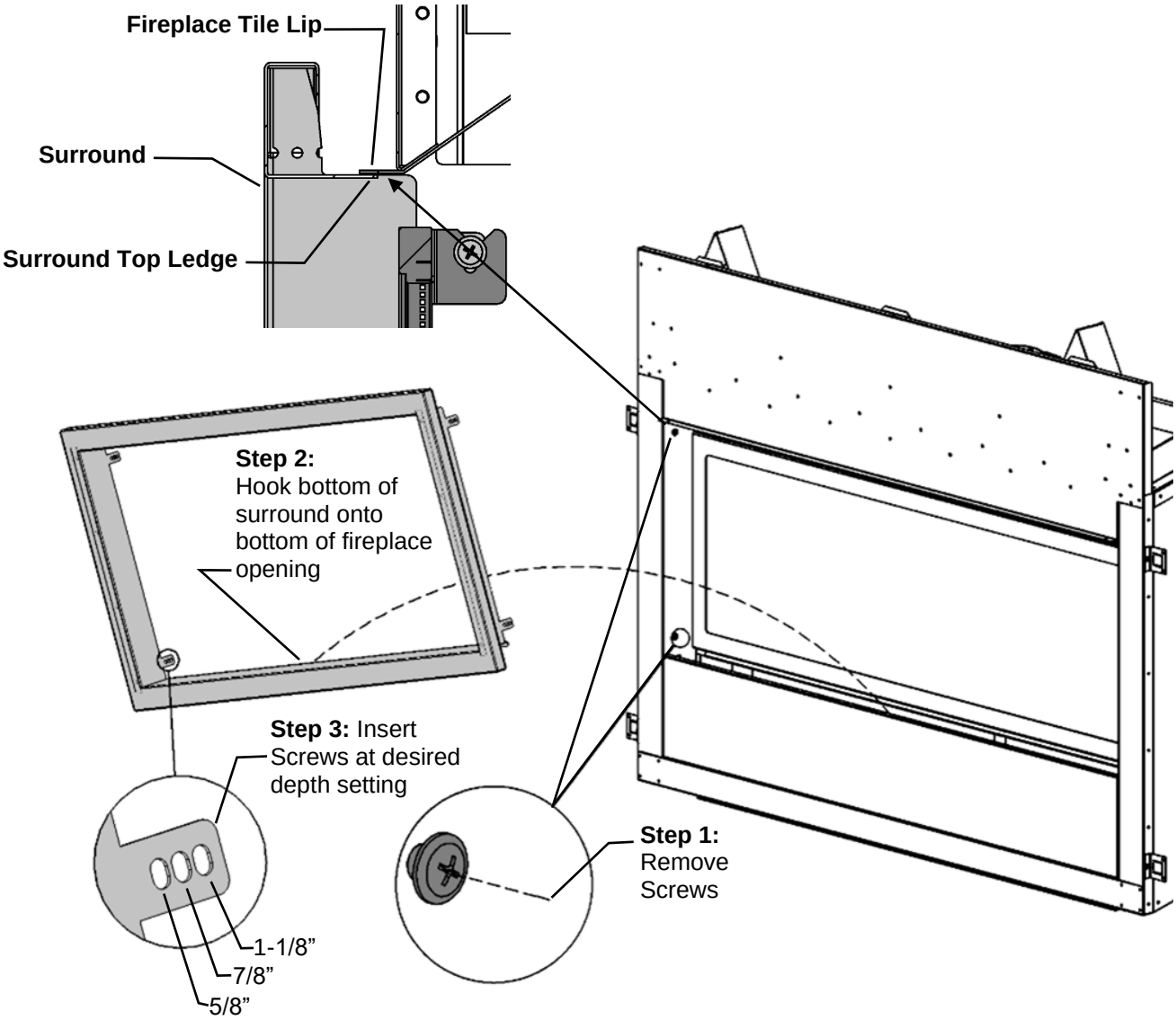


**Installation Procedure:**

1. Remove the [2] Screws inside each side of the fireplace opening. **Do not discard.**
2. Hook the bottom of the Surround onto the bottom of the fireplace opening and push the top up against the fireplace.

**NOTE:** The inside top ledge of the surround will fit ***under*** the tile lip on the fireplace (see illustration above).

3. Reinsert the screws at the desired depth setting. **NOTE:** Do not completely tighten screws as the Safety Screen also mounts onto them.

## ZCVRB60 Component Locations

### Millivolt and Proflame 1 Units:

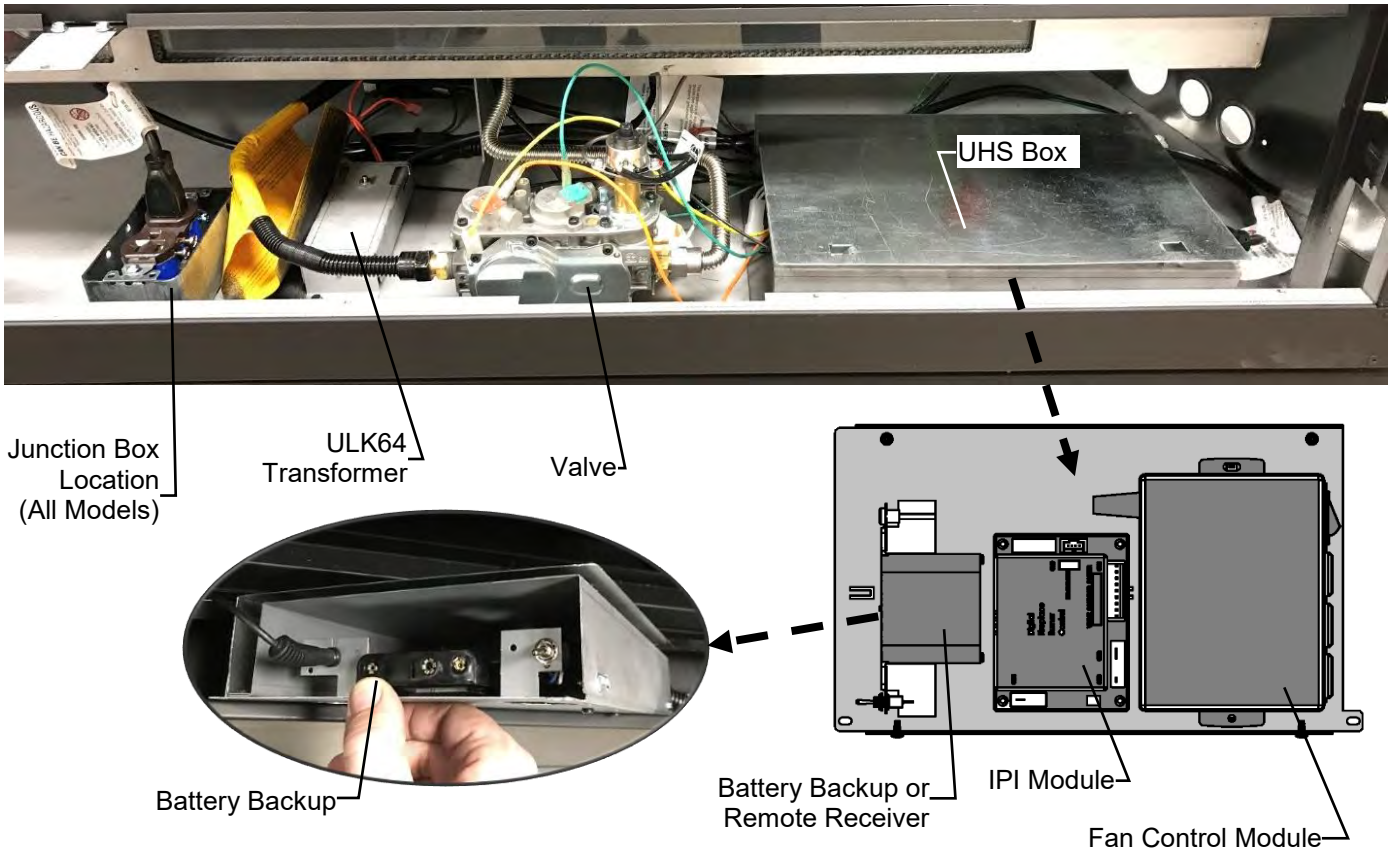


### Proflame 2 Units:

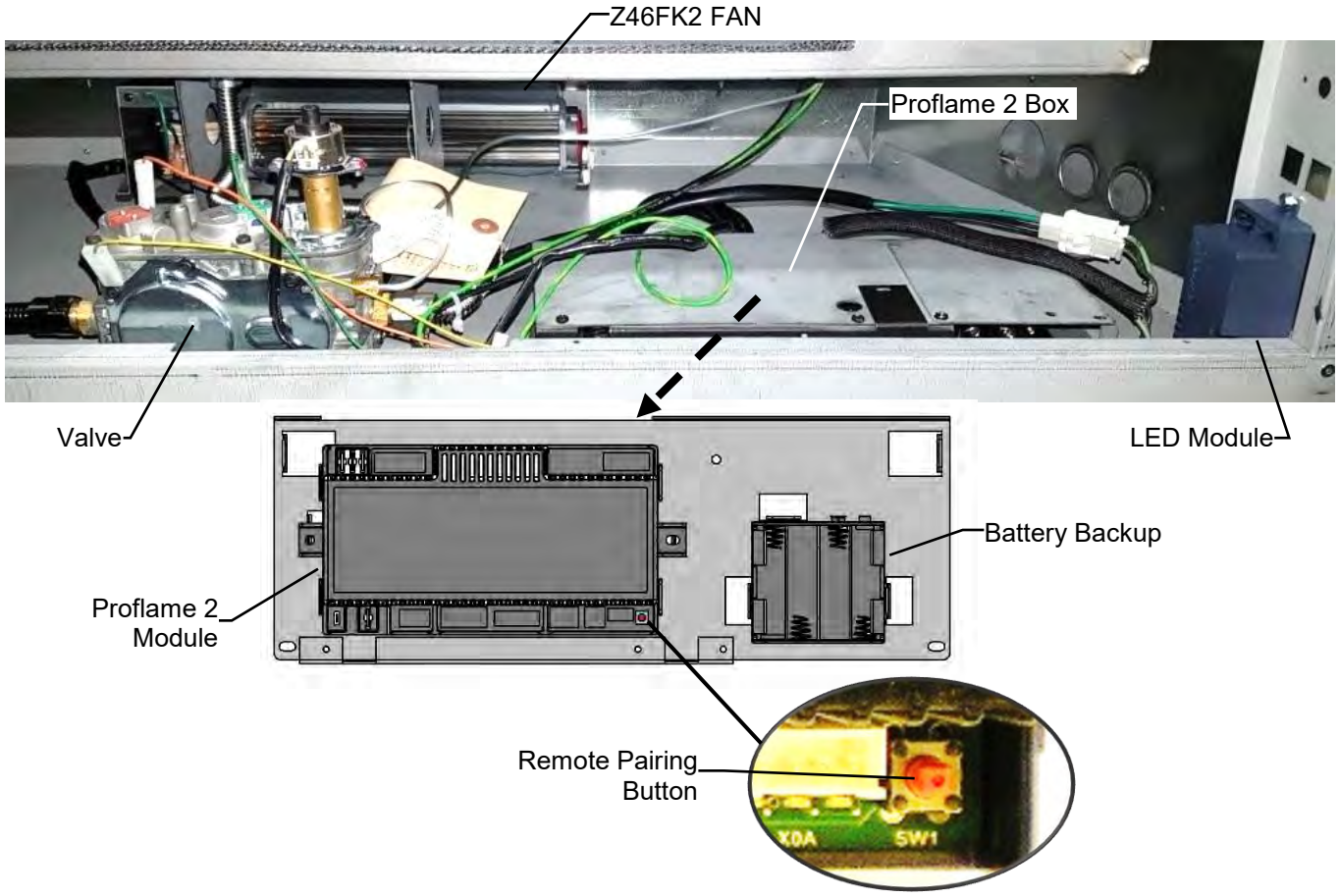

# ZCVRB60 Z46FK Fan Kit Installation

Fan Kit should be installed **before** facing material is applied or surround is installed. To **remove** fan for service, the burner pan must be removed and work done through the opening (See **Burner System Removal** section).

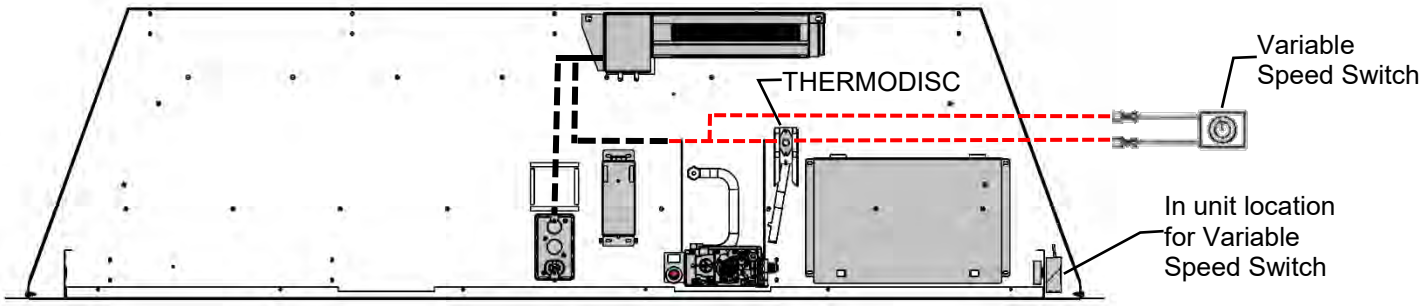


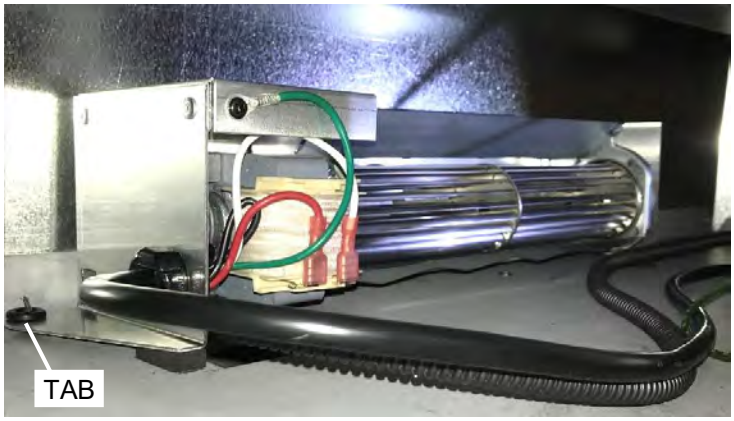


Fan may be installed from left side of fireplace.

Variable Speed Switch may be installed through existing 3/8" hole in side frame of fireplace.

**NOTE: Do not allow cords or wires to come into contact with the firebox or the underside of the burner pan.**

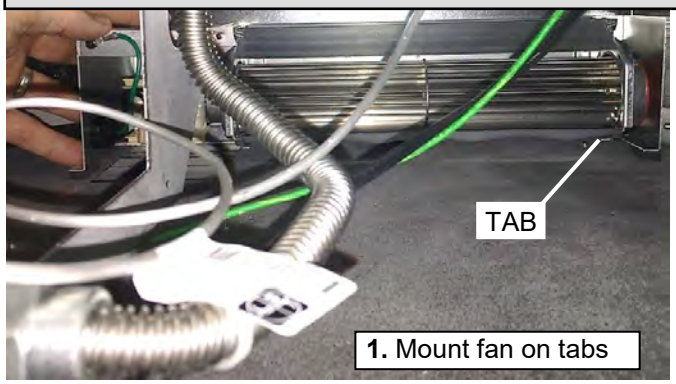


**1.** Mount fan on tabs

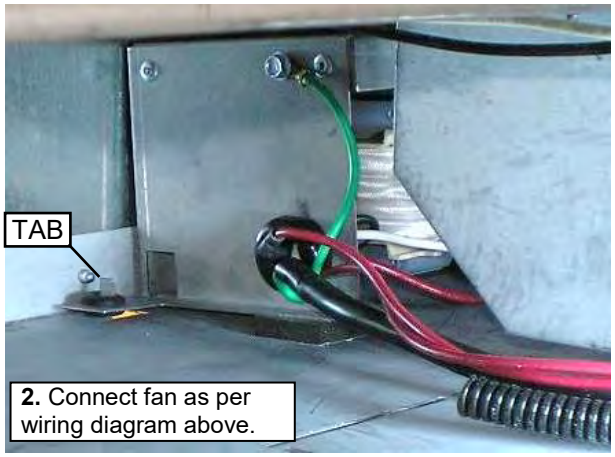


**2.** Connect fan as per wiring diagram above.

## ⚠WARNING

**Electrical Grounding Instructions**

This appliance is equipped with a three prong (grounding) plug for your protection against shock hazard and should be plugged directly into a properly grounded three-prong receptacle. Do not cut or remove the grounding prong from this.

**Before Servicing:**

1. Ensure all power supply is shut off.
2. Label all wires prior to disconnecting when servicing control. Wiring errors can cause improper and dangerous operation.
3. For fan servicing: Vacuum and clean lint/dirt build-up on the fan blades and motor.
4. When resealing the Burner Pan, use **Millpac**.

**Thermodisc** is located on Slider to the right of valve.
To replace pull handle out. Replace Thermodisc. Slide back in.

## Split Receptacle- Fan Speed Control Outside of Fireplace

If you plan to locate the variable speed control switch for the fan outside of the fireplace and you require a constant source of AC power inside the unit for another accessory such as lights or an IPI valve system, follow one of the procedures below.

| ⚠WARNING | ⚠WARNING | ⚠WARNING |
|---|---|---|
| A qualified electrician must connect electrical wiring to junction outlet for built-in installation.<br><br>**Follow all codes.** | Electrical Grounding Instructions – This appliance is equipped with a three – pronged (grounding) plug for your protection against shock hazard and should be plugged directly into a properly grounded three-prong receptacle. | Label all wires prior to disconnection when servicing controls. Wiring errors can cause improper and dangerous operation. Verify proper operation and servicing. |

⚠**Caution**: Electrical installation to be done by a qualified installer. All wires must be connected and grounded in accordance with CSA Standard C22.1- Canadian Electrical Code part 1 or with the National Electrical Code, ANSI /NFPA 70 (latest edition) and /or in accordance with local codes.

Switch Controlled Split Receptacle With Switch At START Of Cable Run

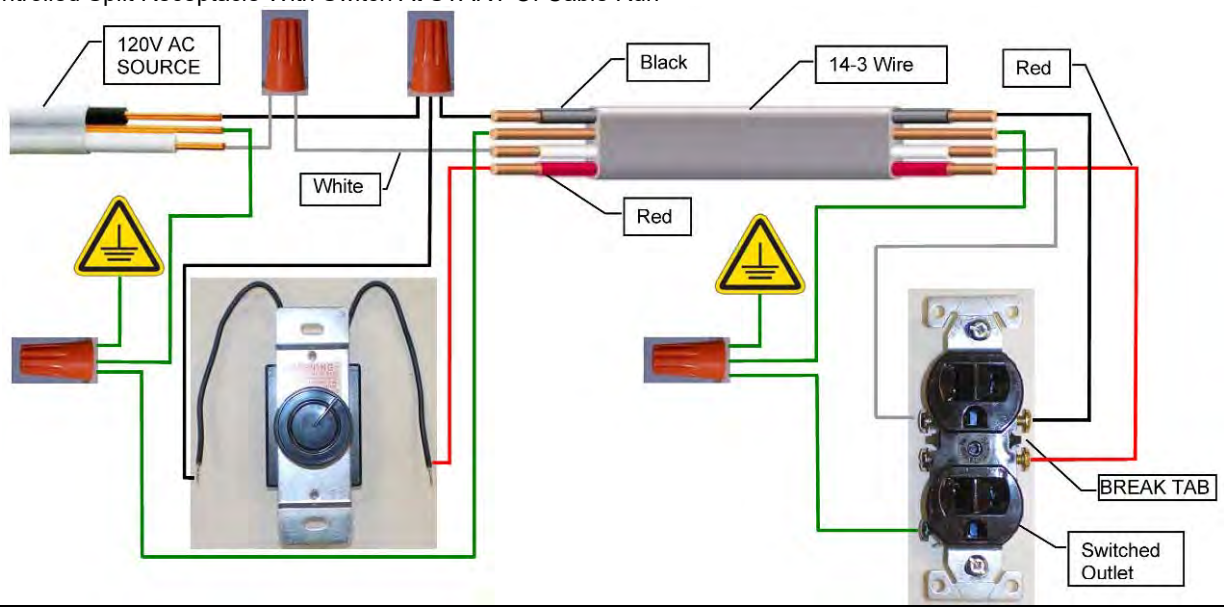


Switch Controlled Split Receptacle With Switch At END Of Cable Run

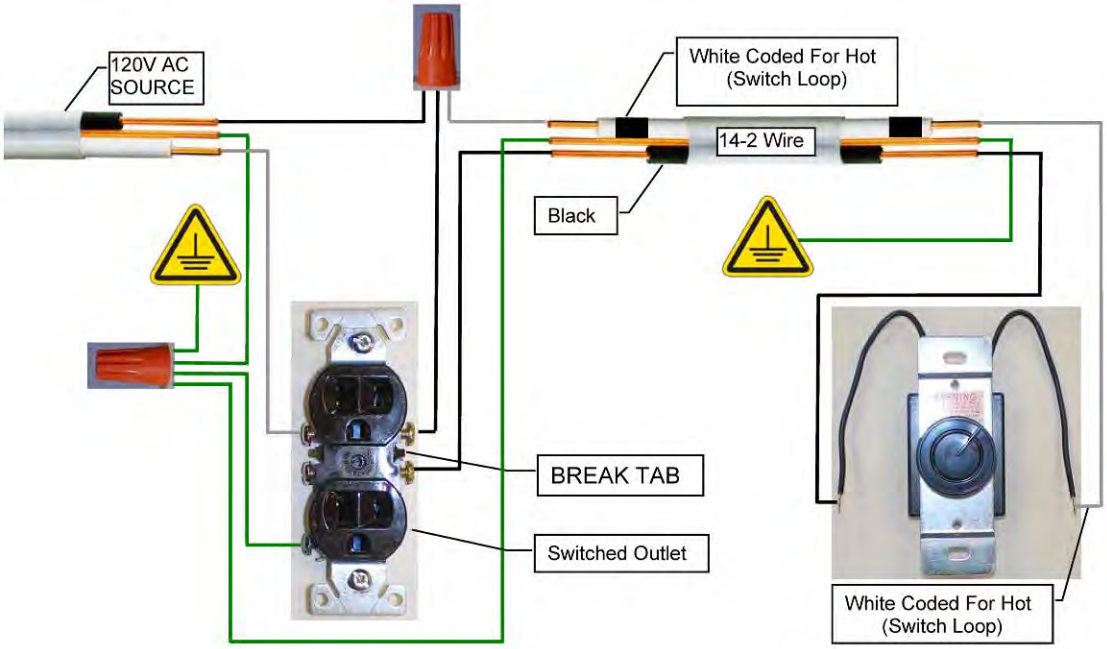

### Glass Cleaning

It will be necessary to clean the glass periodically. During start-up, condensation, which is normal, forms on the inside of the glass and causes dust, lint etc. to cling to the glass surface. Also, initial paint curing can deposit a slight film on the glass. It is therefore recommended that initially the glass be cleaned two or three times with non-abrasive common household glass cleansers and warm water. After that, the glass should be cleaned two or three times a season depending on the circumstances.

**Warning and Cautions**

- Do not clean when the glass is hot.
- Do not use abrasive cleaners.
- Using a substitute glass will void all product warranties.
- Do not strike or abuse glass. Care must be taken to avoid breakage of the glass.
- Do not operate this fireplace without the glass front or with a broken glass.

### Glass Replacement

Only Tempered Low E Glass may be used, and coated side of glass must face toward firebox.
**Be sure to purchase glass from an authorized dealer.**

To replace glass,

1. Clean all materials from door frame.
2. Scrape off old silicone down to metal.
3. Using a high heat silicone temperature-resistant to 500°F (260°C) apply a continuous bead of approximately 1/4" to all four sides of frame and insert glass with new gasket. Frame should be on flat surface with a small amount of weight pressing glass into silicone. Let dry approximately 15 to 20 minutes.
4. Use caution when removing broken or damaged glass. Wear gloves.

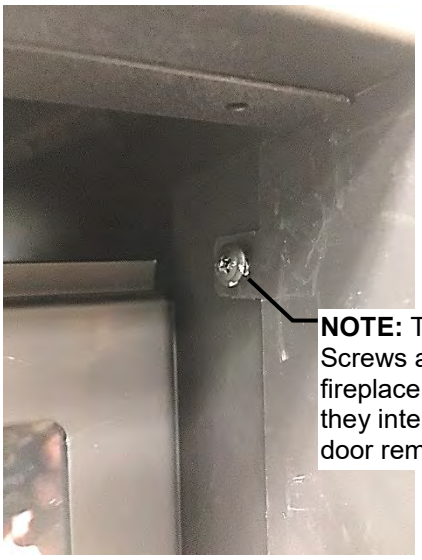


### Removal of the Glass Door ZCVRB60

1. Remove the door by unlatching the 2 top latches. Simply place 2 fingers in the grooves, pull towards you and lift upwards slightly.
2. Once the top of the door is unlatched, simply pull outwards and lift upwards to unlatch the bottom.
3. When re-installing the door place the bottom of the door in first and secure with Top Latch assembly to the door.

### Spring Replacement: ZCVRB60

*Over time, spring may need to be replaced if tension is lost.

1. To remove the top latch, remove the 2 hex screws that secure it in place. They are located in the firebox.
2. Once all the screws are removed the latches will slide out of place.
3. There is 1 lock nut per latch. When replacing a spring, tighten the lock nut until 2 threads are beyond the locknut. This is critical for proper tension.

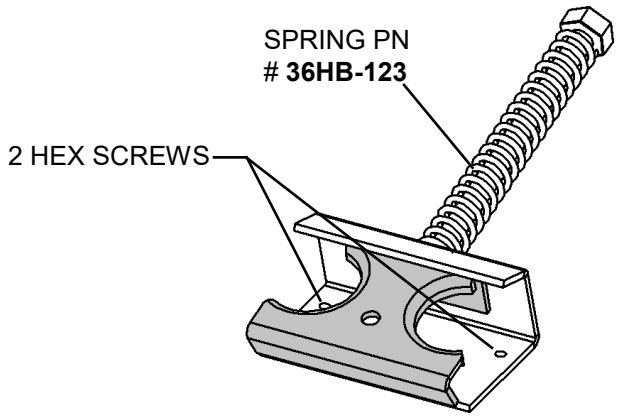


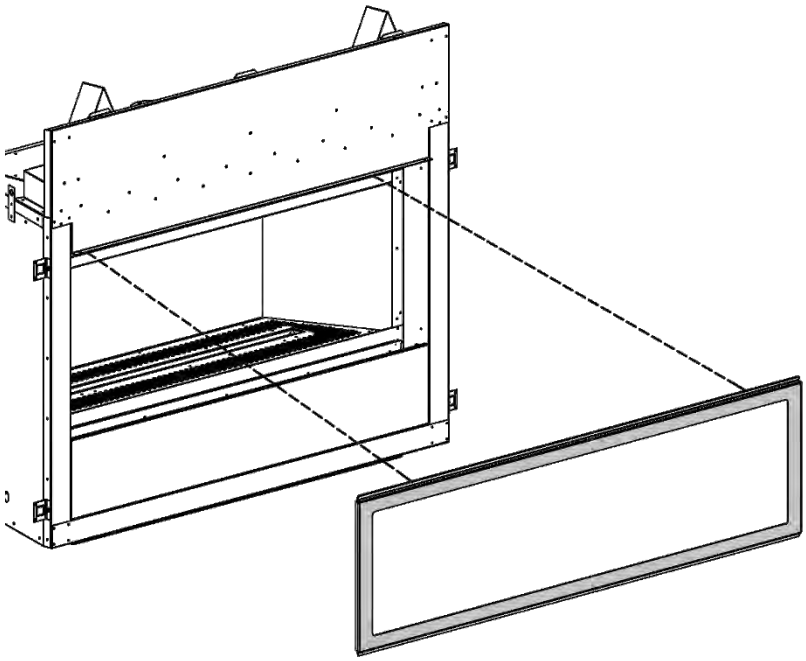

## ZCVRB60 Valve Access Cover Removal

Remove the Safety Screen in order to access igniter and valve controls.

Refer to Safety Screen Installation / Removal instructions.

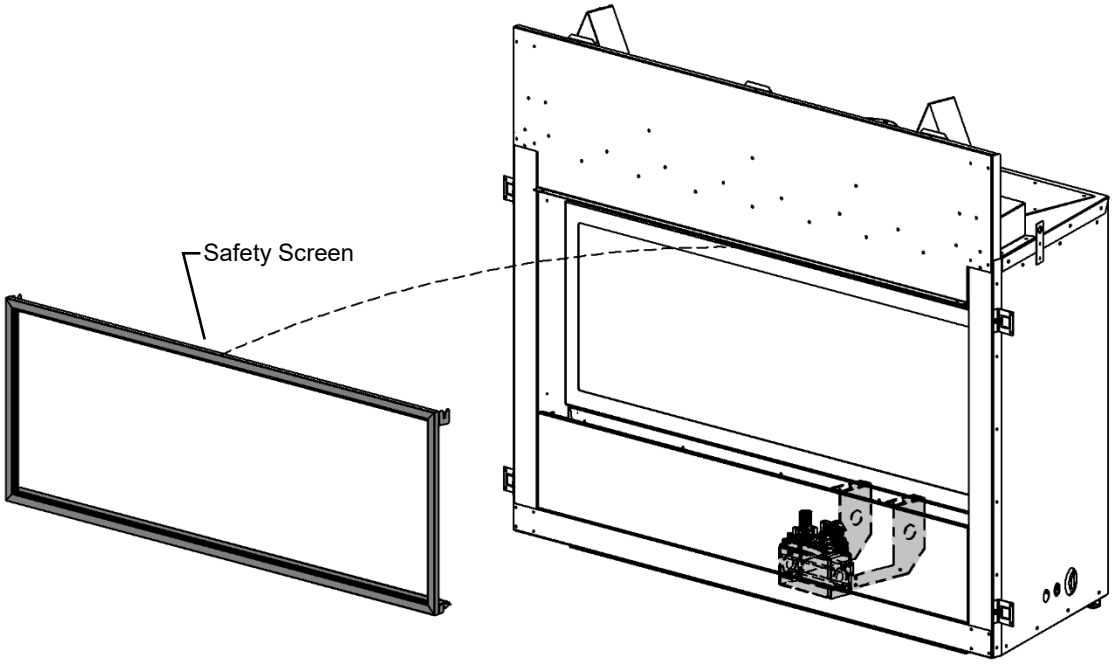


## ZCVRB60 Removable Lower Face Panel

**Installers Note:**

The Lower Face Panel is removable. This allows all necessary gas line and electrical connections to be made easily.

Once the installation is complete attach the Lower Face Panel with the supplied screws.

The Lower Face Panel must be on the unit **Before** Facing Materials are applied.

**Note:** Once Facing Materials are applied, removal of the Lower Face Panel will not be possible.

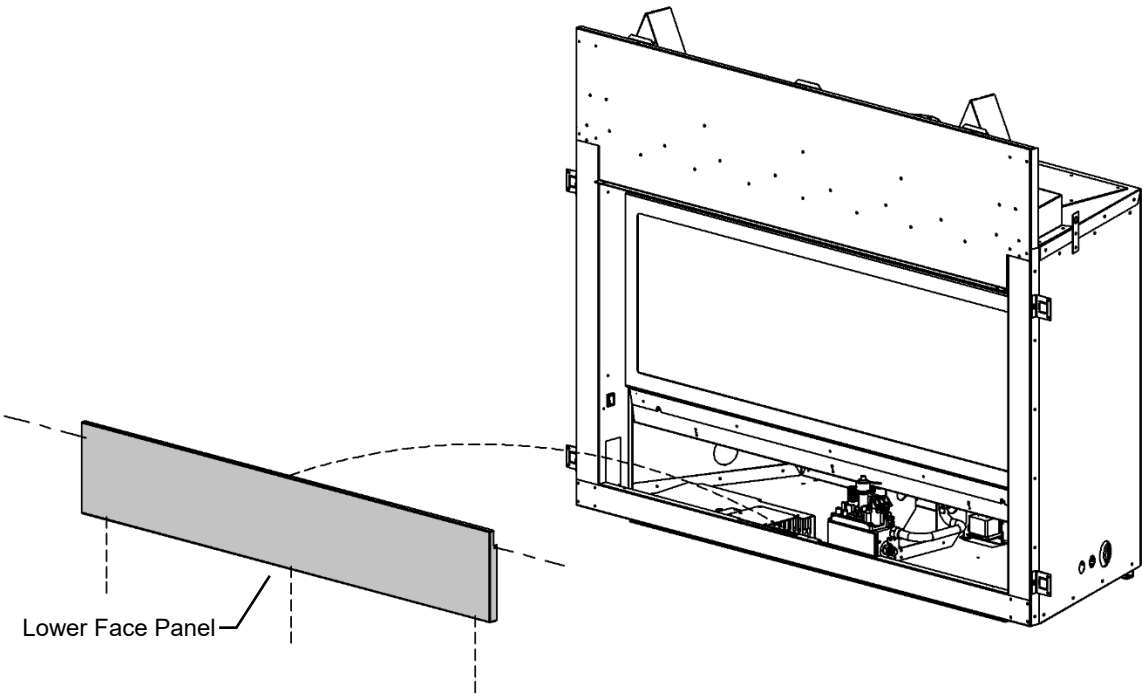

# ZCVRB60PL Porcelain Liner Installation

**ZCVRB60PRL Parts List:**
[1] – Back Liner
[1] – Left Side Liner
[1] – Right Side Liner

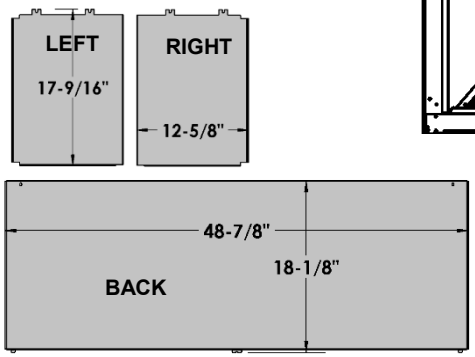


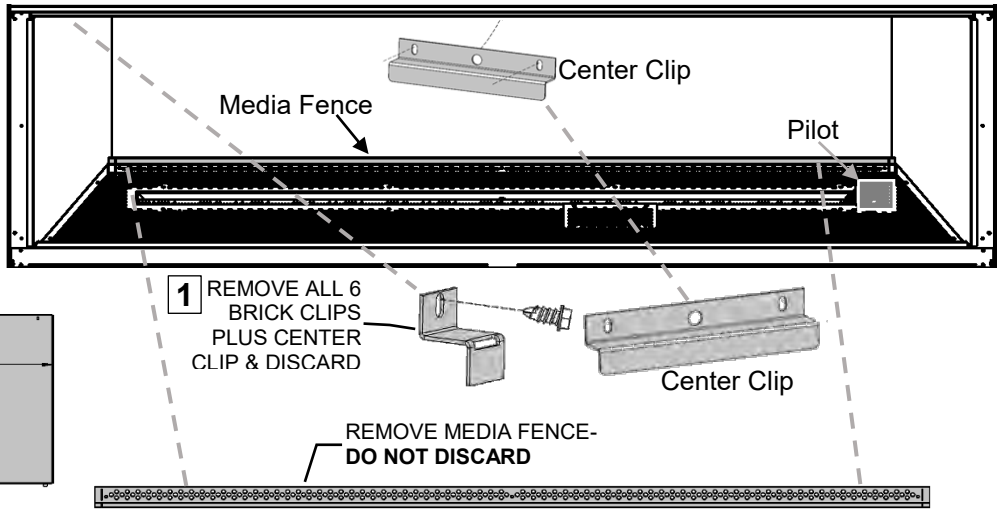


**2** Remove **Media Fence** from **Media Tray** with [Qty. 3] Lower Liner Clips Attached. Discard Lower Liner Clips.

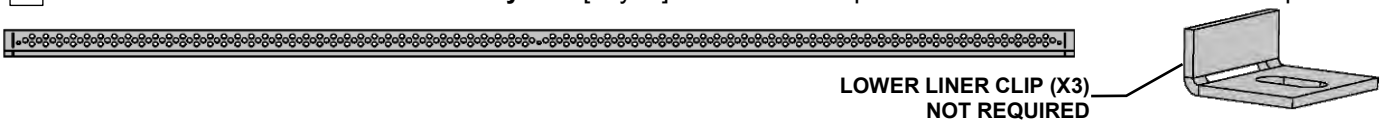


**3** INSTALL BACK LINER

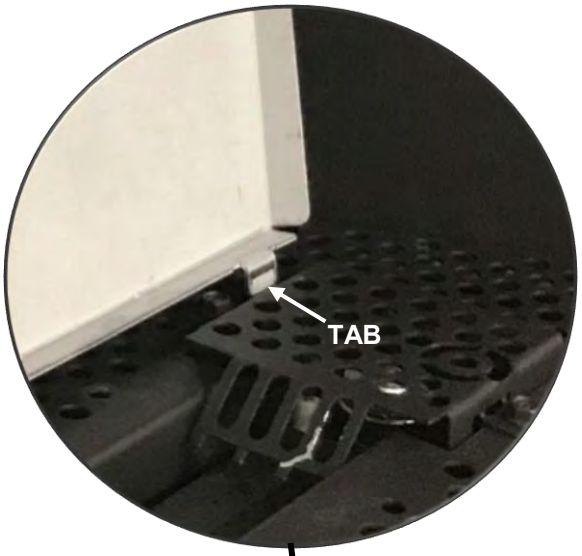

CONTINUED ON NEXT PAGE

**4** INSTALL SIDE LINERS

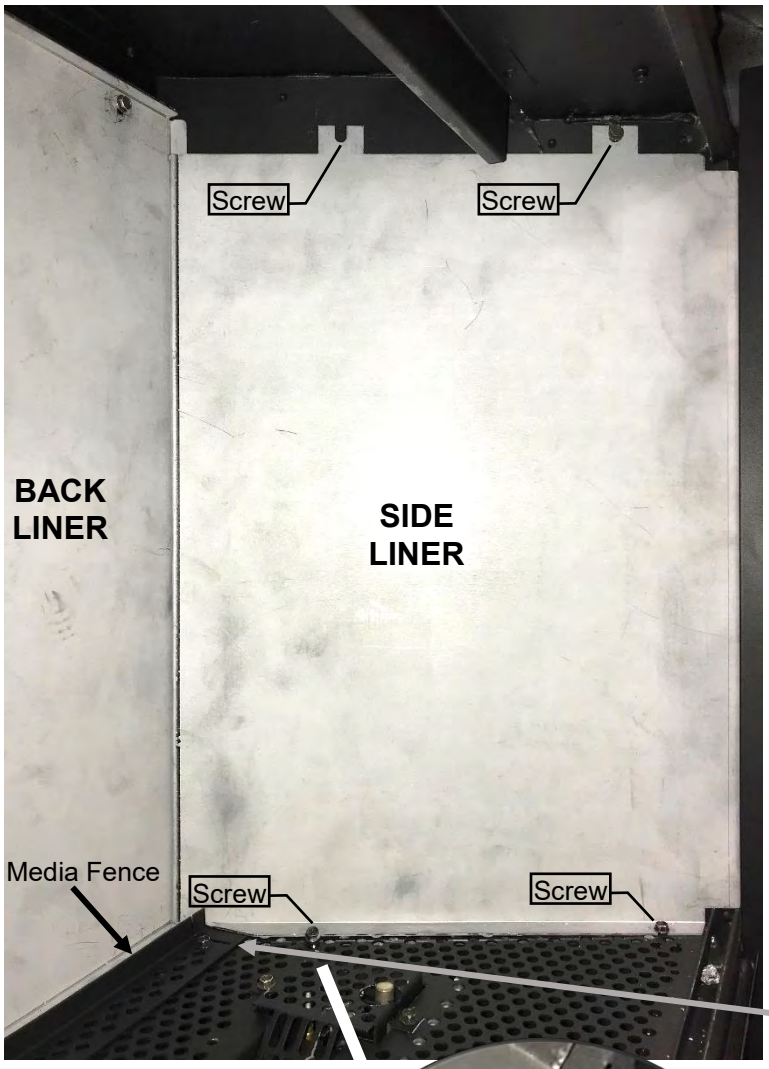


**5** REPLACE MEDIA FENCE IN THE ORIGINAL POSITION

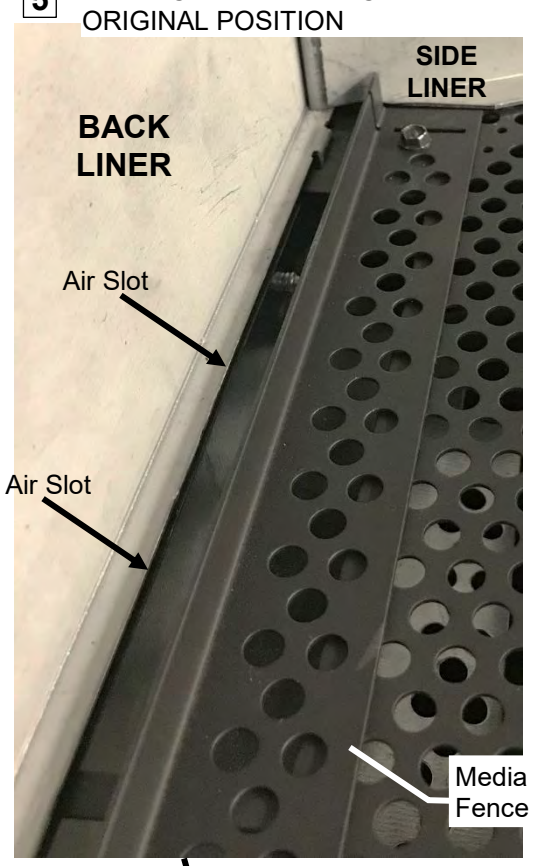


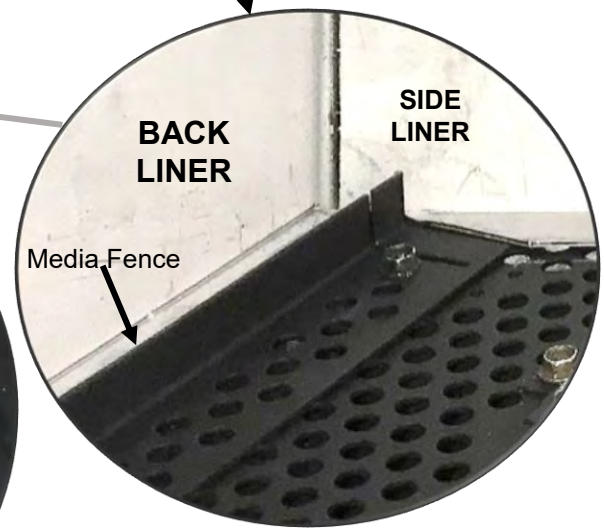


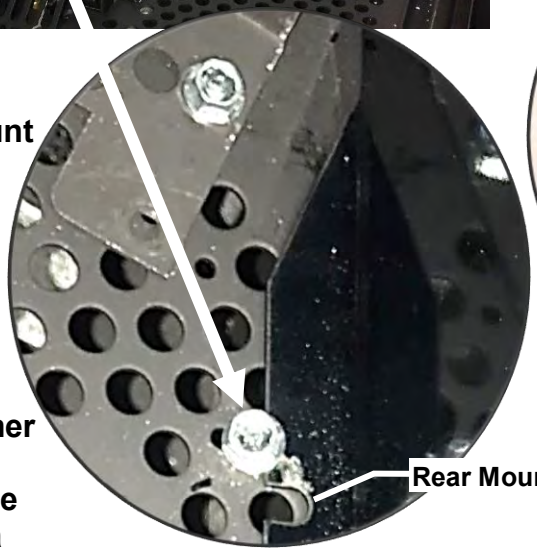


**NOTE: For some units, the Rear Mount Slot of the Side Liners may be aligned with a 1/4" hole instead of a .110" starter hole.**

**If this is the case, simply press the liner firmly against the Side Wall and fix the liner in place with a DT Screw.**

⚠ **Warning**: Failure to position the parts in accordance with these diagrams or failure to use only parts specifically approved with this appliance may result in property damage or personal injury.

⚠ **Note: Warping and Discoloration of Porcelain or Painted Metal Liners Is Not Covered Under Warranty.** Porcelain Metal Liners may discolour and warp during normal operation of your appliance. This is normal, and not considered a defect.

# MQRB60RLS Stacked Brick Liner Installation

**MQRB60RLS Parts List:**
[1] – Back Liner
[1] – Left Side Liner
[1] – Right Side Liner

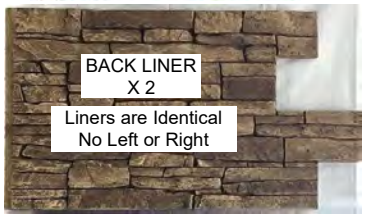


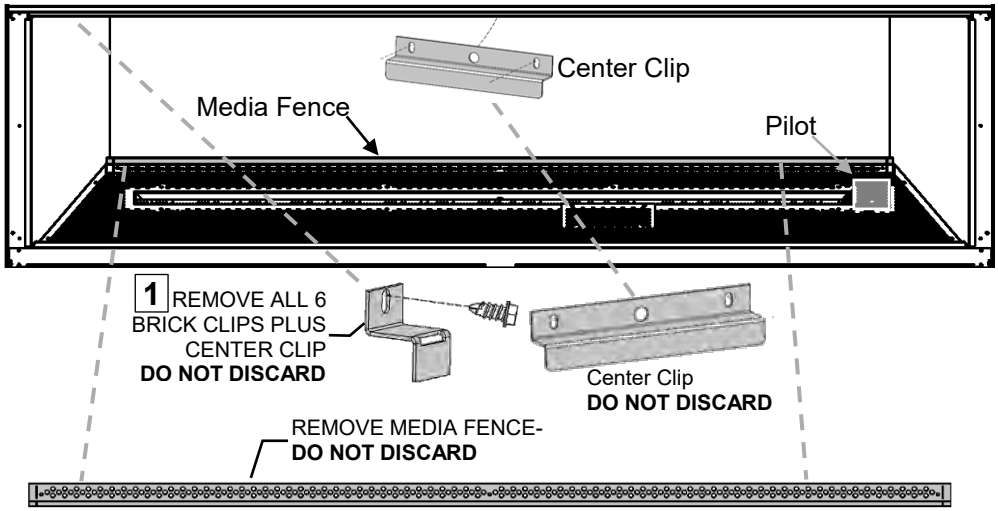


**2** Remove **Media Fence** from Media Tray with [Qty. 3] Lower Liner Clips attached. **Do Not Discard**.

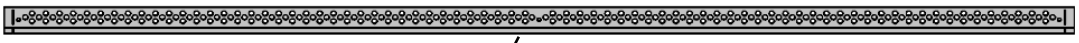


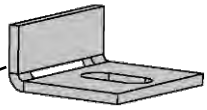


**3** Install Back Liners. Reinstall Center Clip.

**4** Install Side Liners. Reinstall all 6 Brick Clips.

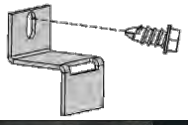

**5** Remove **End Tabs** from **Media Fence**.

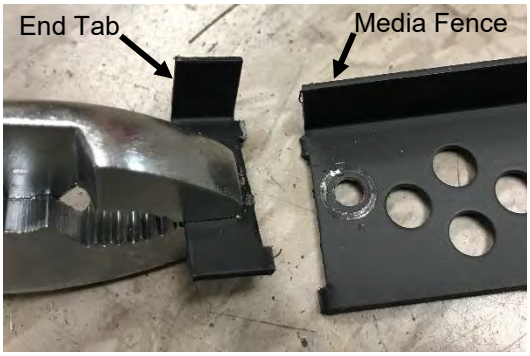


⚠ **Note: Discoloration of Liners Is Not Covered Under Warranty.**

**Liners may discolor during normal operation of your appliance. This is normal, and not considered a defect.**

**6** Install [Qty. 3] **Lower Liner Clips** as shown.

**7** Install **Media Fence** as shown. There must be a **1/2" Air Gap** between Back Liner and Media Fence.

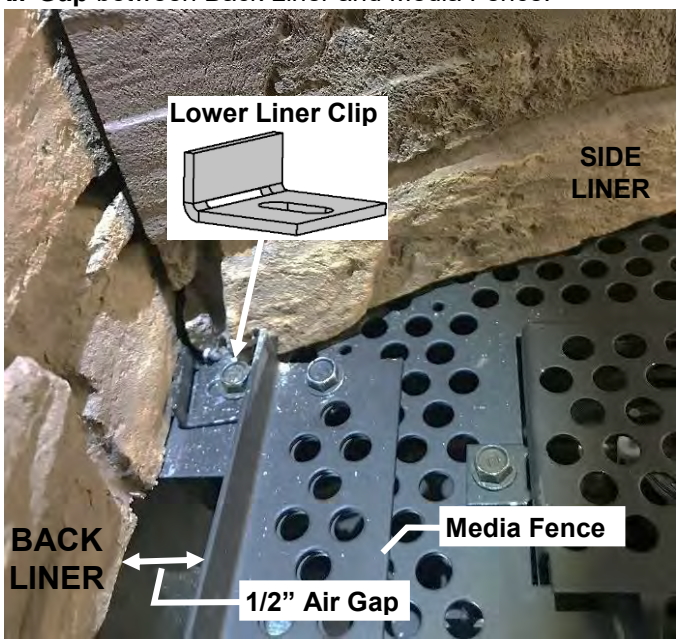

# Gas Line Installation

This gas appliance should be installed by a qualified installer in accordance with local building codes and with current CAN/CGA - B149.1 or .2 installation codes for Gas Burning appliances and equipment in Canada and the National Fuel Gas Code ANSI Z223 in the U.S.A.

1. The gas pipeline can be brought in through either the right or the left side of the appliance. A knockout is provided at either location to allow for the gas pipe installation and testing of any gas connection.
2. The gas control inlet is 3/8" NPT. Typical installation layout for rigid pipe is shown at right.
3. When using copper or flex connector, use only approved fittings. Always provide a union so that gas line can be easily disconnected for burner or fan servicing. See gas specification for pressure details and ratings.
4. When a vertical section of gas pipe is required for the installation, a condensation trap is needed. See CAN/CGA-B149.1 or .2 for code details.

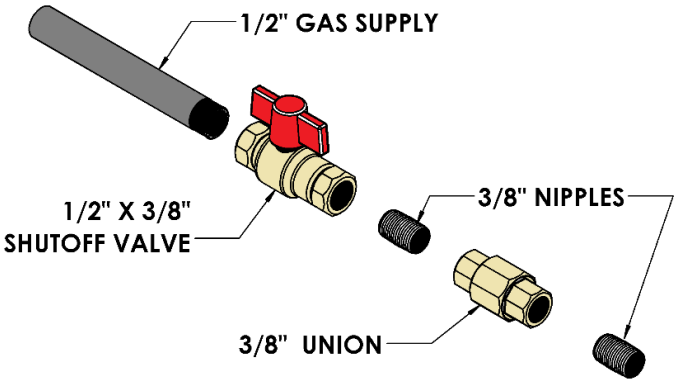


5. For natural gas, a minimum of 3/8" iron pipe with gas minimum pressure of 4.5" w.c. must be used for supply from the gas meter. Consult with the local gas utility if any questions arise concerning pipe sizes.
6. A 1/8" NPT plugged tappings are accessible for test gauge connection both on the inlet and outlet of the gas valve.
7. Turn the gas supply ON and check for leaks. DO NOT USE OPEN FLAME FOR THIS PURPOSE. Use an approved leak testing solution.
8. The appliance and its individual shutoff valve must be disconnected from the gas supply piping system during any pressure testing of that system at test pressures in excess of 1/2 PSIG (3.5 KPa).
9. The appliance must be isolated from the gas supply piping system by closing its individual shutoff valve during any pressure testing of the gas sup- ply piping system at test pressures equal to or less than 1/2 PSIG (3.5 KPa).

**NOTE:** The gas line connection may be made of 1/2" rigid pipe or an **Approved Kingsman Flex Connector, such as FP15GC**. Since some municipalities have additional local codes, it is always best to consult your local authorities and the current CAN/CGA - B149.1 or .2 installation code in Canada or the National Fuel Gas code ANSI Z223.1 in the U.S.A

For the state of Massachusetts, a **T-handle gas shut-off valve** must be used on a gas appliance. This T-handle gas shut-off valve must be listed and approved by the state of Massachusetts. This is in reference to the state of Massachusetts state code CMR238.

Important: Always check for gas leaks with a soap and water solution. Do not use open flame for leak testing.

Shutoff valves installed in tubing systems shall be rigidly and securely supported independently of the tubing.

## Gas Specifications

| MODELS | ZCVRB60N<br>ZCVRB60NE<br>MQZCVRB60NE2 | ZCVRB60LP<br>ZCVRB60LPE<br>MQZCVRB60LPE2 |
|---|---|---|
| **Fuel** | Natural | Propane |
| **Gas Control** | Millivolt / IPI | Millivolt / IPI |
| **INPUT** | | |
| **Maximum** | 35,000 BTU | 35,000 BTU |
| **Low** | 23,000 BTU | 28,000 BTU |
| **Orifice Size (0-4500ft)** | #32 | #49 |
| **Air Shutter** | 1/16" | 1/4" |

Gas Inlet Size S.I.T. 820 Nova, 3/8" NPT

| Gas Supply Pressure | Minimum | Normal | Maximum |
|---|---|---|---|
| Natural Gas | 5.5" | 7" | 9" |
| Propane | 11" | 11" | 12" |

| Manifold Pressure | Natural Gas | Propane |
|---|---|---|
| Manifold Pressure High | 3.5 IN. W.C./.87 KPa | 10 IN. W.C./2.61 KPa |
| Manifold Pressure Low | 1.6 IN. W.C./.40 KPa | 6.3 IN. W.C./1.57 KPa |

# Millivolt System, Lighting, and Burner Control

## FOR YOUR SAFETY READ BEFORE LIGHTING

**WARNING**: If you do not follow these instructions exactly, a fire or explosion may result causing property damage, personal injury or loss of life.

**BEFORE LIGHTING**

A This appliance has a pilot which must be lighted by hand. When lighting the pilot, follow these instructions exactly.

B Smell all around the appliance area for gas. Be sure to smell next to the floor because some gas is heavier than air and will settle on the floor.

**WHAT TO DO IF YOU SMELL GAS**

- Do not try to light an appliance.
- Do not touch any electrical switch; do not use any phone in your building.
- Immediately call your gas supplier from a neighbour's phone. Follow the gas supplier's instructions.
- If you cannot reach your gas supplier, call the fire department.

C Use only your hand to push or turn the gas control knob. Never use tools. If the knob will not push in or turn by hand, don't try to repair it. Call a qualified technician. Force or attempted repair may result in a fire or explosion.

D Do not use the appliance if any part has been under water. Immediately call a qualified service technician to inspect the appliance and to replace any part of the control system which has been under water.

## LIGHTING INSTRUCTIONS

1. Stop! Read the safety information above this label.
2. Set the thermostat to lowest setting.
3. Turn off all electrical power to the appliance.
4. Locate valve under the burner assembly.
5. If the control knob is not already in the off position, i.e. the word "OFF" in the 9 o'clock position, then push in the gas control knob slightly and turn ↻ clockwise to "OFF". NOTE: Knob cannot be turned from "PILOT" to "OFF" unless knob is pushed in slightly. Do not use force.
6. Wait five [5] minutes to clear out any gas. If you then smell gas. STOP! Follow "B" in the safety information above on this label. If you don't smell gas then go to the next step.
7. Now push in the control knob slightly and turn ↺ counter-clockwise to the "PILOT" position.
8. Push in the control knob all the way and hold it. With the other hand push in the red igniter button until you hear a click. Now observe closely the pilot burner located on the rear center-left hand side of the main burner. If a flame has appeared then continue to depress the control knob for 20 seconds. If the flame did not appear then continue to depress the red igniter button every 5 seconds until a flame is established. NOTE: If after 30 seconds a flame has not yet been established then turn the control knob back to the off position and repeat steps 5, 6 & 7.
9. Once the pilot has been established hold the control knob in the depressed position for approximately 25 seconds before releasing. If the flame goes out then repeat steps 7 and 8.
   - If the knob does not pop up when released, stop and immediately call your service technician or gas supplier.
   - If the pilot will not stay lit after several tries, turn the gas control to "OFF" and call your service technician.
10. Now turn the control knob to the "ON" position. The burner will not light unless the wall switch thermostat or remote control is turned "ON" or in the case of the thermostat there is a call for heat.
11. Close the access door and turn all electrical power back to the appliance.

## TO TURN OFF THE APPLIANCE

1. Set the thermostat to lowest setting.
2. Turn off all electric power to the appliance if service is to be performed.
3. Open the control access door.
4. Push in the gas control knob slightly and turn ↻ clockwise to the "OFF" position. Do not force.
5. Replace control access panel.

**NOTE**: Only one on/off device (manual on/off, remote control, or hard wired thermostat) should be connected to the appliance at any one time, this is most important when installing an insert or stove as the on/off rocker switch is installed at the factory.

Recommended Maximum Lead Length (Double Wire)
When Using Wall Switch or Thermostat

| Wire Size | Max. Length |
|---|---|
| 14ga | 100ft [30.4m] |
| 16ga | 64ft [19.5m] |
| 18ga | 40ft [12.1m] |
| 20ga | 25ft [7.6m] |
| 22ga | 15ft [4.5m] |

CAUTION: DO NOT WIRE 120V POWER TO MILLIVOLT SWITCHES OR THERMOSTAT.

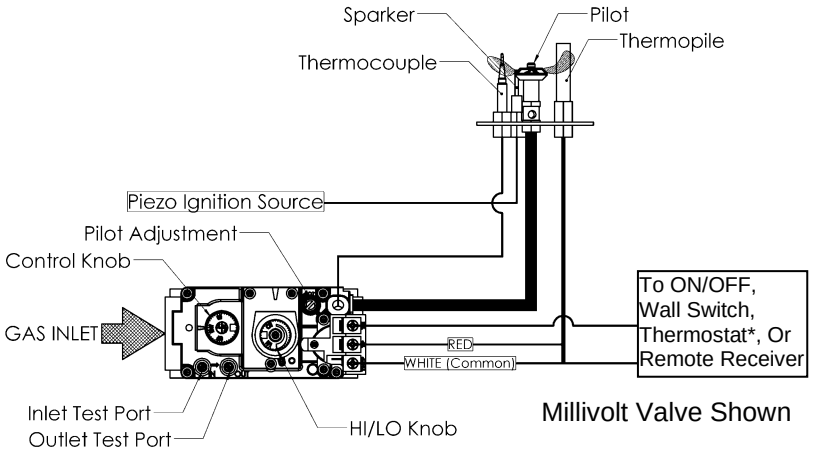


Millivolt Valve Shown

# - Lighting Instructions for Millivolt Valve with 7 Day Timer -

## FOR YOUR SAFETY READ BEFORE LIGHTING

**WARNING: If you do not follow these instructions exactly, a fire or explosion may result causing property damage, personal injury or loss of life.**

A. This appliance has a pilot which must be lighted by hand. When lighting the pilot, follow these instructions exactly.

B. **BEFORE OPERATING** smell around the appliance area for gas. Be sure to smell next to the floor because some gas is heavier than air and will settle on the floor.

WHAT TO DO IF YOU SMELL GAS

- Do not try to light any appliance.
- Do not touch any electric switch; do not use any phone in your building.
- Leave the building immediately.
- Immediately call your gas supplier from a neighbor's phone. Follow the gas supplier's instructions.
- If you cannot reach your gas supplier, call the fire department.

C. Do not use this appliance if any part has been under water. Immediately call a qualified service technician to inspect the appliance and replace any part of the control system and any gas control which has been under water.

D. Use only your hand to push in or turn the gas control knob. Never use tools. If the knob will not push in or turn by hand, do not try to repair it; call a qualified service technician. Force or attempted repair may result in a fire or explosion.

## OPERATING INSTRUCTIONS

1. **Stop!** Read the safety information above on this label.
2. This appliance is equipped with an on-demand pilot that shuts off after 7 days.
3. Set the thermostat to lowest setting.
4. Turn off all electric power to the appliance.
5. Locate valve under the burner assembly.
6. If the control knob is not already in the off position, i.e. the word "OFF" in the 9 o'clock position, then push in the gas control knob slightly and turn ↻ clockwise to "OFF". NOTE: Knob cannot be turned from "PILOT" to "OFF" unless knob is pushed in slightly. Do not use force.

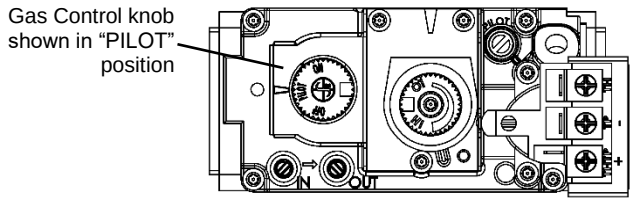


7. Wait five (5) minutes to clear out any gas. Then smell for gas, including near the floor. If you smell gas, STOP! Follow "B" in the safety information above this label. If you do not smell gas, go to next step.
8. Now push in the control knob slightly and turn ↺ counter-clockwise to the "PILOT" position.
9. Push in the control knob all the way and hold it. With the other hand push in the red igniter button until you hear a click. Now observe closely the pilot burner located on the rear center-left hand side of the main burner. If a flame has appeared then continue to depress the control knob until a BEEP is heard. This procedure may take up to TWO MINUTES.
10. If the pilot flame did not appear then continue to depress the red igniter button every 5 seconds until a flame is established. NOTE: If after 30 seconds a flame has not yet been established then turn the control knob back to the off position and repeat steps 7, 8, and 9.
11. Once the pilot has been established hold the control knob in the depressed position for approximately 25 seconds before releasing. If the flame goes out then repeat steps 9 and 10.
    - If the knob does not pop up when released, stop and immediately call your service technician or gas supplier.
    - If the pilot will not stay lit after several tries, turn the gas control to "OFF" and call your service technician.
12. Now turn the control knob to the "ON" position. The burner will not light unless the wall switch thermostat or remote control is turned "ON" or in the case of the thermostat there is a call for heat.
13. Close the access door.
14. Turn on all electric power to the appliance.
15. Set thermostat to desired setting.
16. If the appliance will not operate, follow the instructions "To Turn Off Gas To Appliance" and call your service technician or gas supplier.

## TO TURN OFF GAS TO APPLIANCE

1. Set thermostat to lowest setting.
2. Turn off all electric power to the fireplace if service is to be performed.
3. Open the control access door.
4. Push in the gas control knob slightly and turn ↻ clockwise to the "OFF" position. Do not force.
5. Close the control access door.

## Annual Inspection List for Determining Safe Operation of a Direct Vent Gas Fireplace

**Refer to this checklist for proper maintenance, safe use, and operation.**

**See each section for more specific information.**

1. Inspect and operate all pressure relief mechanisms (i.e., relief dampers, spring loaded door latches) installed on your appliance to verify relief mechanisms are free from obstruction to operate.

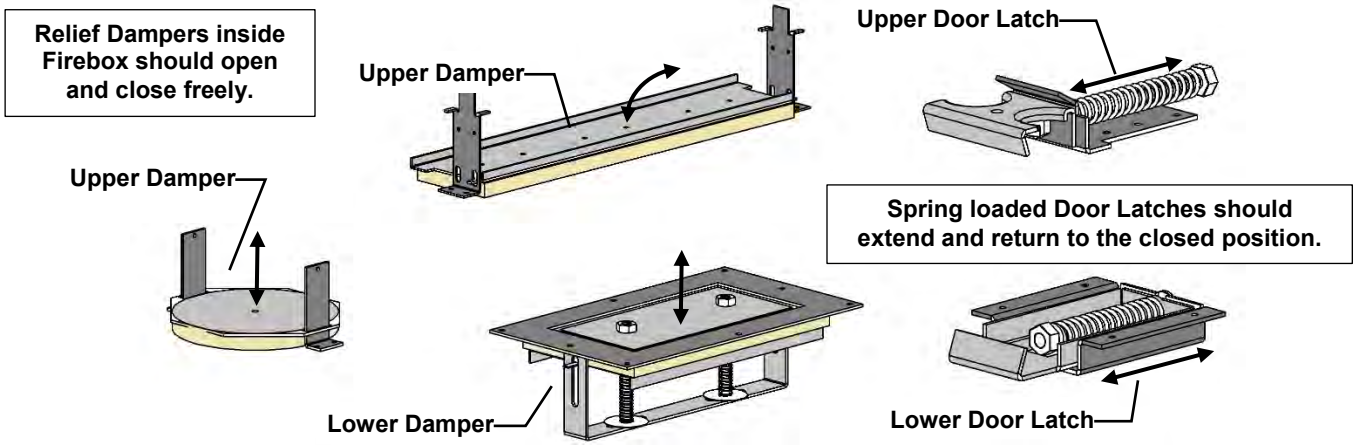


2. Clean glass window with a suitable fireplace glass cleaner. Abrasive cleaners must not be used. Be careful not to scratch the glass when cleaning.

3. Inspect the operation of the Pilot. Ensure that it is working properly.

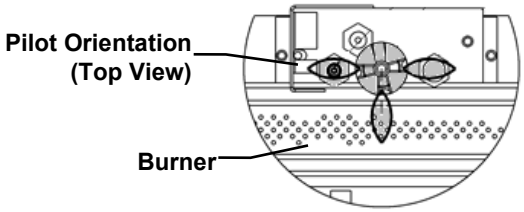

4. Inspect and ensure the lighting of the main burner occurs within 4 seconds of the main gas valve opening. Visual inspection should match that outlined in the appliance instruction manual (refer to ***Monthly Flame Inspection***). Inspect primary air openings for blockage.

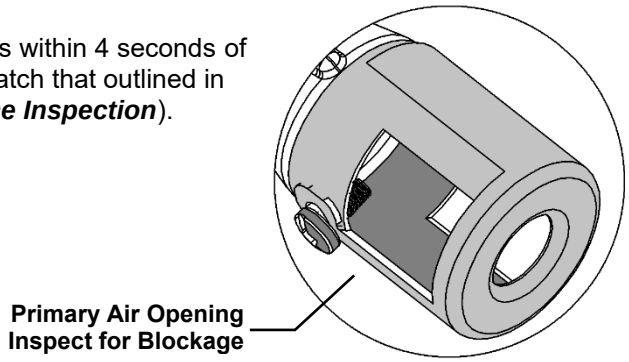


5. Inspect condition of vent and vent terminal for sooting or obstruction and correct if present.

6. Vacuum and clean any debris in the firebox that is not supposed to be there.

7. Test and measure the flame failure response time of the flame safety system. It must de-energize the safety shutoff in no more than 30 seconds.
   **Procedure for Millivolt Units:** Turn on fireplace for 5 minutes. Shut off fireplace while listening to valve. A "click" should be heard within 30 seconds. This indicates the safety shutoff is working properly.
   **Procedure for IPI Units:** Turn on fireplace and allow main burner to come on. Then disconnect Flame Sense wire from IPI Module (X3 Connection). The fireplace should shut down immediately.

8. Check all accessible gas-carrying tubes, connections, pipes and other components for leaks.

# Burner System Maintenance

It is recommended to annually inspect and clean the Burner System to prevent malfunction and / or sooting. This operation should be performed by your dealer or a qualified technician.

**⚠ -CAUTION-**

Before servicing the burner system ensure that the gas supply is turned OFF and disconnect all electrical connections to the appliance. Allow the appliance to cool to room temperature. Note that the pilot assembly may be hot in an intermittent or standing-pilot system—even if the main burner was never on. Exercise caution when working within the area.

**-ALL WORK SHOULD BE PERFORMED BY A QUALIFIED AND CERTIFIED TECHNICIAN-**

## Monthly Flame Inspection

It is recommended to turn on the unit at least once a month and inspect the flame pattern to ensure there are no problems with the burner tube (Flame should appear similar to the above picture).

The pilot flame should also be inspected monthly to ensure proper operation.

**Pilot Must Maintain This Relationship With Burner.**

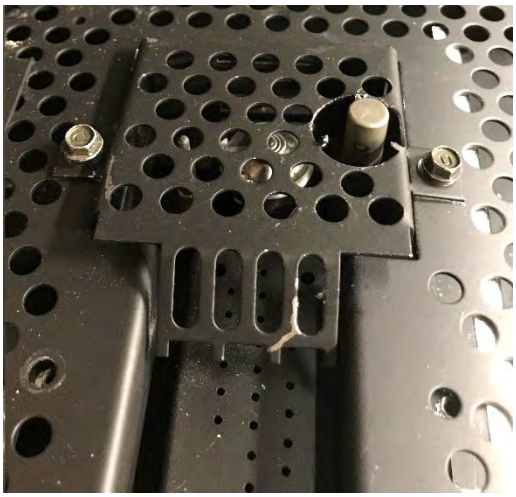

**Pilot Area Must Not Be Covered.**

*Pilot Shield should be visually inspected monthly for signs of deterioration due to flame exposure. Replace if necessary.

# ZCVRB60 Gas Conversion Part A

**Models:** ZCVRB60N, ZCVRB60NE, ZCVRB60LP, ZCVRB60LPE, MQZCVRB60NE2, MQZCVRB60LPE2

| Kit Number | Description | Pilot Orifice | Burner Orifice Brass (1000-255) | Brass Nipple | Air Shutter | Hi/Lo Regulator |
|---|---|---|---|---|---|---|
| 60ZCVRB-CKLP | Propane Conversion -Millivolt- | 1001-P167SI **#30** (977.167) | #49 | 1000-253 Close | 1/4” | 1001-P202SI (0.907.202) |
| 60ZCVRB-CKNG | NG Conversion -Millivolt- | 1001-P165SI **#51** (977.165) | #32 | 1000-253 Close | 1/16” | 1001-P201SI (0.907.201) |
| 60ZCVRB-CKLPI | Propane Conversion -IPI- | 1001-P168SI **#35** (977.168) | #49 | 1000-253 Close | 1/4” | 1002-P014SI (0.907.014) |
| 60ZCVRB-CKNGI | NG Conversion -IPI- | 1001-P166SI **#62** (977.166) | #32 | 1000-253 Close | 1/16” | 1002-P016SI (0.907.016) |
| 60ZCVRB-CKLP2 | Propane Conversion -IPI- | 1001-P168SI **#35** (977.168) | #49 | 1000-253 Close | 1/4” | 1002-P012SI (907.012) |
| 60ZCVRB-CKNG2 | NG Conversion -IPI- | 1001-P166SI **#62** (977.166) | #32 | 1000-253 Close | 1/16” | 1002-P013SI (907.013) |
| IMPORTANT: Always check for gas leaks with a soap and water solution. DO NOT USE OPEN FLAME FOR LEAK TESTING. | | | | | | |

**Parts List:**

- HI/LO Pressure Regulator Assembly
- Pilot Orifice
- Burner Orifice
- Brass Nipple
- Instructions
- Conversion Kit Label

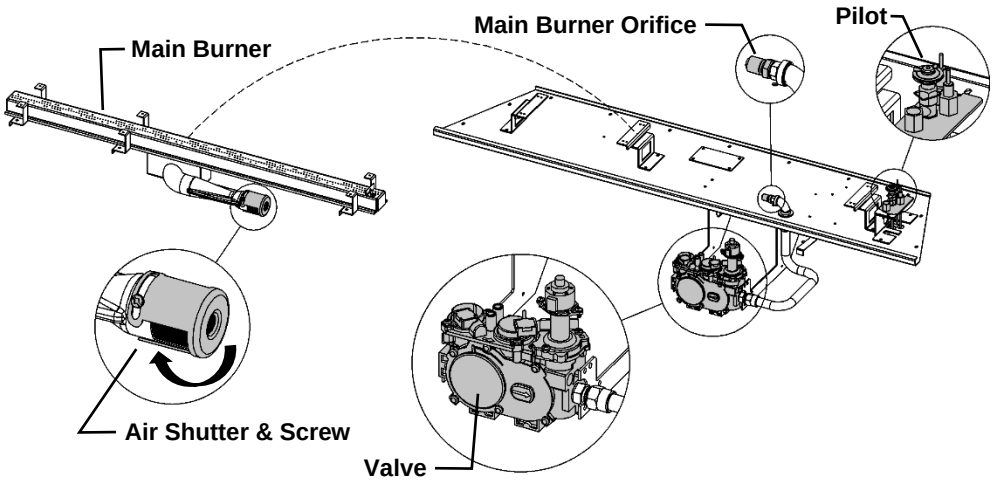


## ⚠ Caution:

**The gas supply shall be shut off prior to disconnecting the electrical power, before proceeding with the conversion.**

1. The Burner Tube must be removed from the Burner Pan Assembly (See **Burner Tube Removal**). Adjust the Air Shutter to the correct Primary Air setting as specified in the manual or on the label plate. To adjust the Primary Air setting, loosen screw on the side of the Air Shutter and rotate to the correct opening using a drill bit or tape measure. Retighten screw.
2. Remove the Main Orifice using a ½” wrench and replace with the new Conversion Orifice which came with the Conversion Kit.
3. Replace the Burner Tube. Install the new Pilot Orifice (See **Pilot Conversion**) and Hi/Lo valve regulator by following instructions supplied with the Conversion Kit.

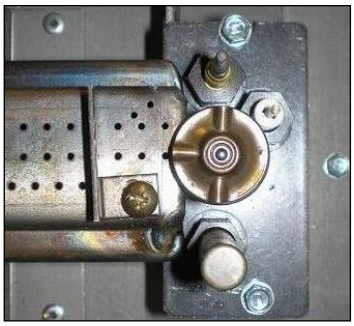

**Pilot Must Maintain This Relationship With Burner.**

## ⚠ -Warning-

This conversion kit shall be installed by a qualified service agency in accordance with the manufacturer's instructions and all applicable codes and requirements of the authority having jurisdiction. If the information in these instructions is not followed exactly, a fire, explosion or production of carbon monoxide may result causing property damage, personal injury or loss of life. The qualified service agency is responsible for the proper installation of this kit. The installation is not proper and complete until the operation of the converted appliance is checked as specified in the manufacturer's instructions supplied with the kit.

Refer to “Gas Specifications Chart” for inlet pressures and input ratings. Clock meter to verify input rate. Place conversion label as close to converted gas control as possible. Refer to lighting instructions to verify the normal operating sequence of the ignition system.

# SIT Gas Conversion for Top Convertible Pilot – Part B (series 0190XYZ)

Instructions for converting SIT 190 series pilot burner injector from NG to PROPANE and from PROPANE to NG only. This information should be considered as supplemental to the Appliance Manufacturer's Instructions.

**WARNING! The installation of this conversion kit must only be undertaken by a qualified and certified gas appliance installer.**

1. Shut-off the gas supply to the appliance.
2. Allow the pilot burner to cool to room temperature.

   **WARNING: Touching a hot pilot burner can result in injury.**

3. The pilot hood is held in place by spring. First remove the spring, then remove the hood by pulling it up from the pilot bracket (fig. 1).
4. Insert a 5/32" or 4 mm Allen wrench into the hexagonal key-way of the injector (fig. 2), and rotate it counter-clockwise until it is free of the injector journal.
5. Verify that the new injector is proper for the application. The injector size is stamped on the side of the injector near the top. Propane injectors have a groove machined around their circumference near the top, while NG injectors do not have a groove (fig. 4). Refer to the Appliance Manufacturer's instruction sheet for the proper injector size.
6. Insert the Allen wrench into the end of the injector. Then, insert the injector into injector journal, and rotate the injector clockwise until a torque of 9 lbf in (1.0 Nm) is achieved.
7. First replace the pilot hood by aligning the tab on the base of the hood with the slot in the side of the pilot journal, and push the hood down, onto the pilot bracket (fig. 3). The hood must sit squarely on the bracket for proper operation. Then replace the spring by pushing it on his seat (fig.3). Check to insure that the hood is properly seated onto the pilot bracket and that the spring is properly inserted onto his seat.
8. Restore the gas supply to the appliance, and ignite the pilot burner. Verify proper ignition and operation.

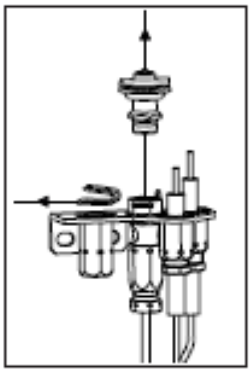

fig. 1

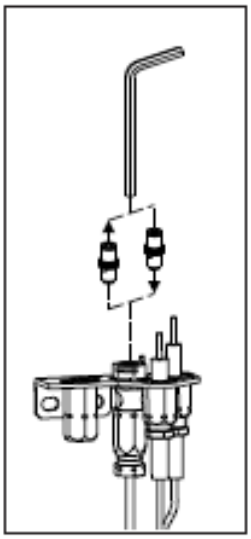

fig. 2

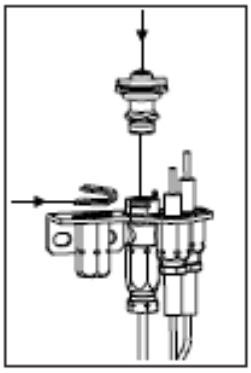

fig. 3

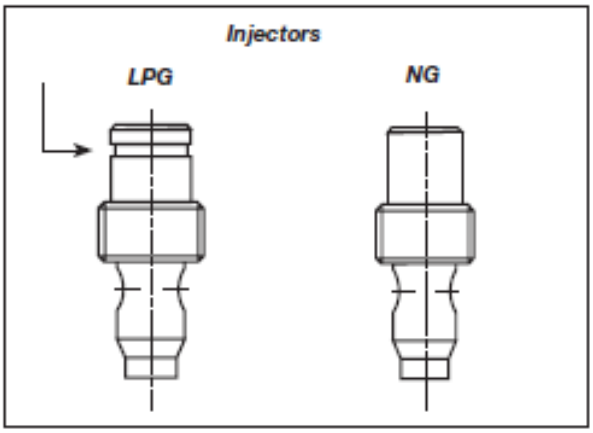


fig. 4

**WARNING!**

**This conversion kit must ONLY be applied as part of a conversion kit supplied by the APPLIANCE MANUFACTURER for the specific appliance, and type of gas, being converted.**

SIT GROUP

www.sitgroup.it

# installationinstructions

7.252.136

## 820 NOVA mV

**Modulating Conversion Kit**

**WARNING!**
**The installation of this conversion kit must only be undertaken by a qualified and certified gas appliance installer.**

***MODULATING PRESSURE REGULATOR CONVERSION KIT INSTALLATION OR REPLACEMENT INSTRUCTIONS.***

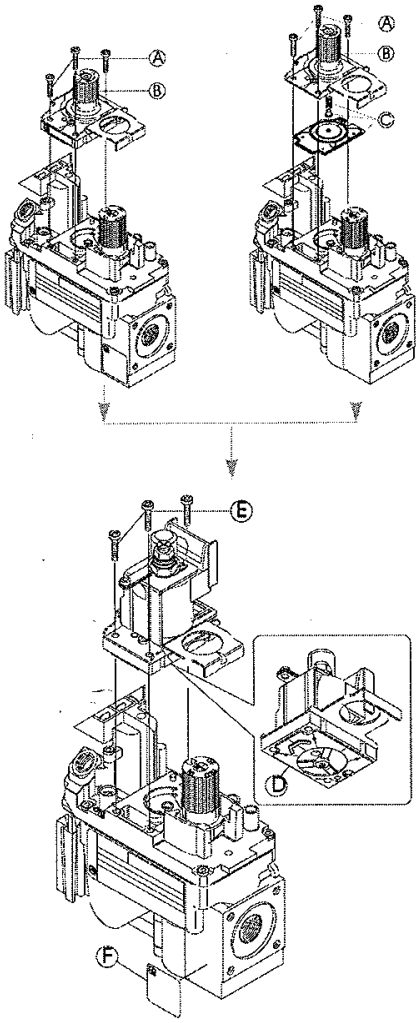


1. *Turn control knob to the OFF position, and shut off the gas supply to the valve.*

2. *Using a Torx T20, or slotted screwdriver, remove and discard the three pressure regulator mounting screws (A), pressure regulator tower (B), and the spring and diaphragm assembly (C). (If applicable)*

3. *Insure that the rubber gasket (D) is properly positioned and install the new modulating pressure regulator assembly to the valve using the new screws (E) supplied with the kit. Tighten screws securely. (Reference torque = 25 In.Lb.)*

4. *Install the enclosed identification label (F) to the valve body where it can be easily seen.*

5. *Apply gas to system and re-light appliance according to manufacturers instructions.*

6. *With the main burner "ON", test the new pressure regulator assembly for leaks using a soap solution.*

7. *Relight the main burner in both the HI and LO positions, and verify proper burner ignition and operation.*

**WARNING!**
**This modulating conversion kit must ONLY be applied as part of a conversion kit supplied by the APPLIANCE MANUFACTURER for the specific appliance, and type of gas, being converted.**

**INSTALLER NOTICE. These instructions must be left with appliance.**

**SIT Group**

## ZCVRB60 Burner System Removal/Installation Guide

**WARNING:** Turn off Unit and allow to cool before cleaning. Only a Qualified service technician should service and repair this appliance.

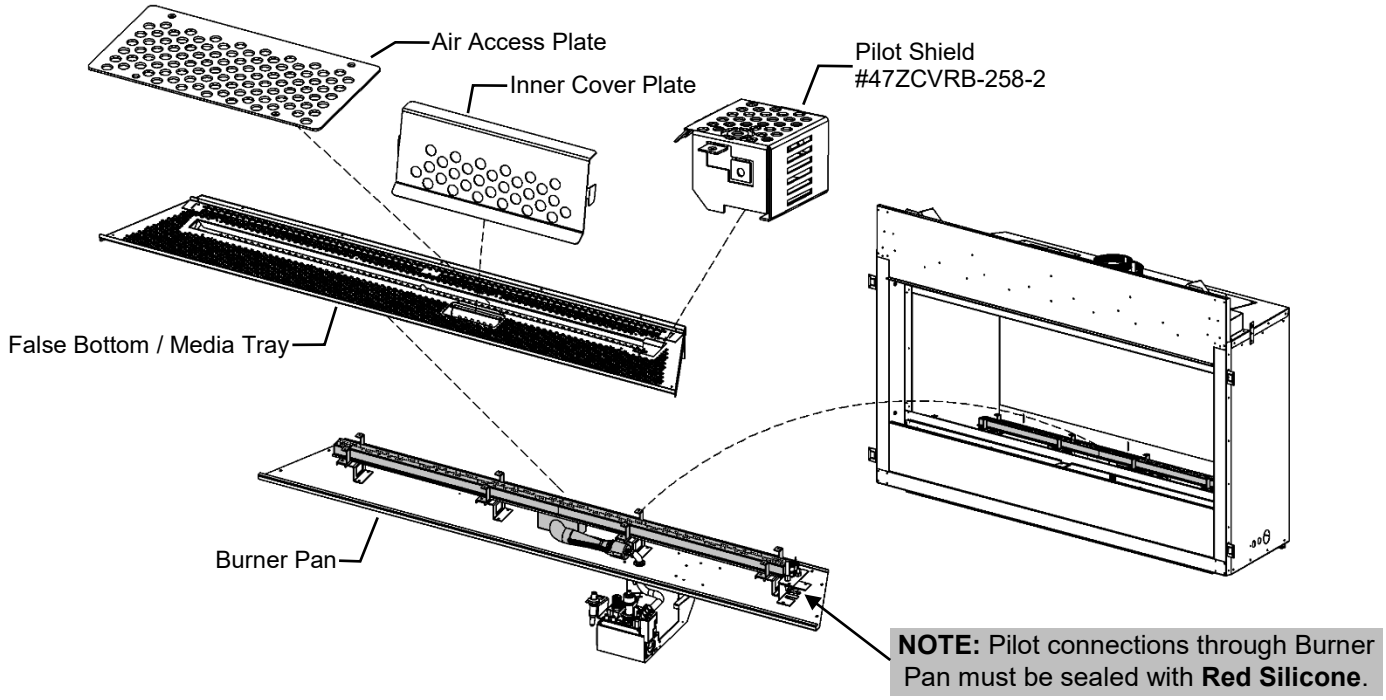


1. Remove the Glass Door from the unit. Remove liners if present. Remove DT screws and lift out the False Bottom.
2. Remove the DT screws around the perimeter of the burner pan.
3. Carefully work the burner pan loose & lift the assembly upward to remove it from the firebox cavity.
4. Installation is the reverse of these steps. Ensure that the mounting surface is clean & fresh **Black Mill Pac** is used to reseal the burner pan.

## ZCVRB60 Burner Tube Removal

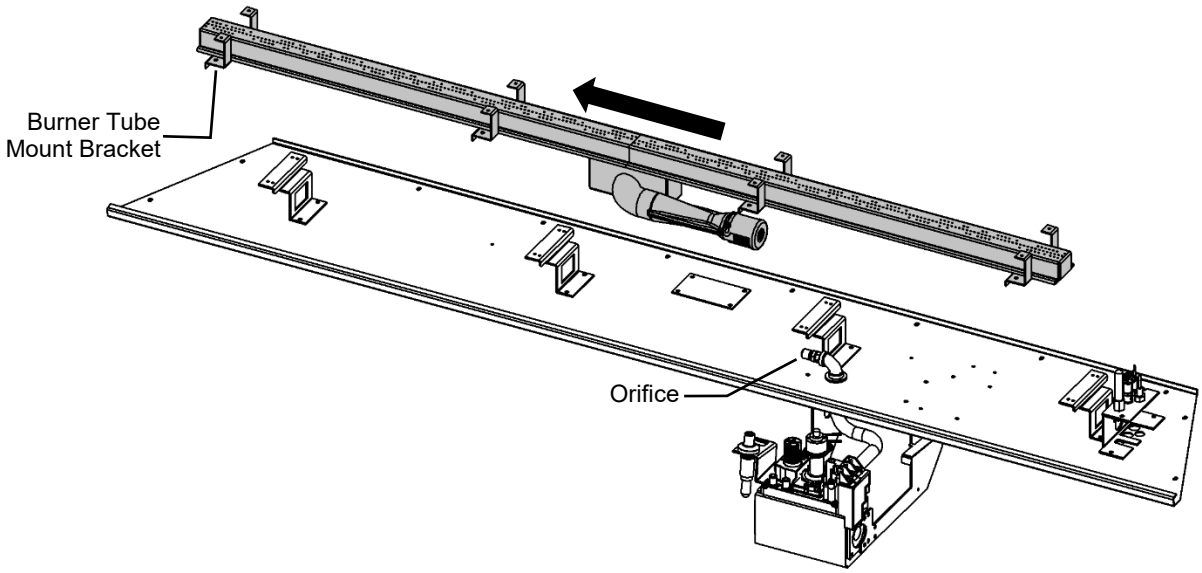


1. Remove the six [8] DT screws from the lower portion of the Burner Tube Mount Brackets.
2. Slide the Burner Tube away from the Plumbing Connection until it disengages from the orifice.
3. Reverse these steps to reinstall.

# ZCVRB60 ULK64 Universal Light Kit (Optional Accent Lighting Kit)

Please follow the current ANSI/NFPA 70 National Electrical Code in the USA and CAN/CSA C22.1 Canadian National Electrical Code in Canada.

Contents of Kit:

- [4] 12V Halogen Lamps
- Lamp Plate with Insulated Studs & wiring
- 12VAC Transformer with 3 prong plug & wire connectors
- Light Switch & Cover Plate c/w10ft wire c/w [1] Loose Female & [1] Loose Male wire connector
- 16" Extension Cord

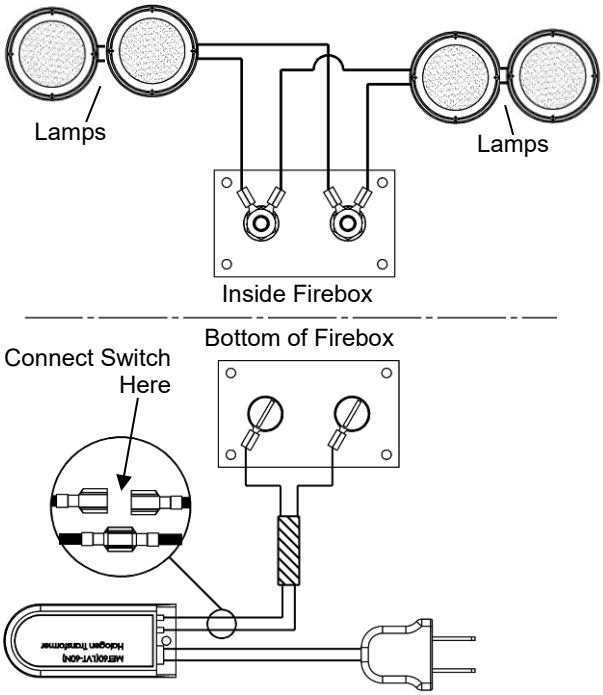

**INSTALLATION:**

**STEP 1:** Remove **False Bottom** and **Burner Tube**. See instructions in manual.

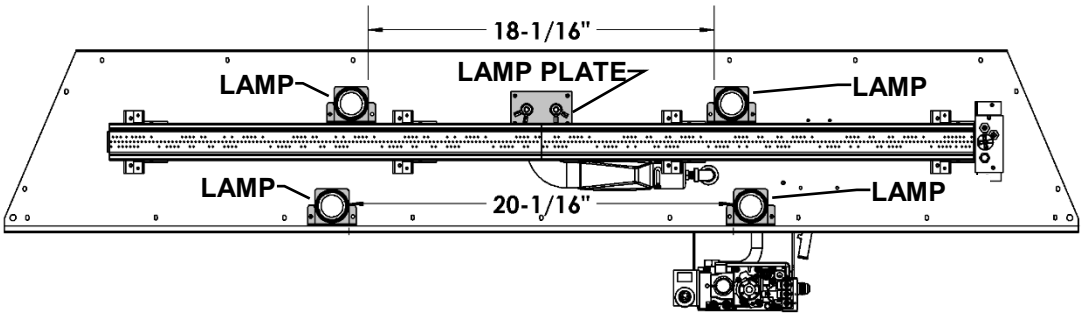


**STEP 2**: Remove Cover Plate and discard.

Clean old sealant from opening.

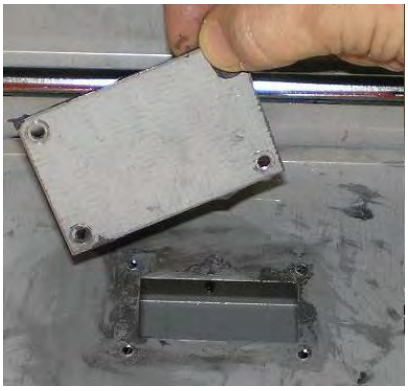

**STEP 3**: Insert wires in loom through hole in firebox. Apply new Mill-Pac Sealant around opening and secure Lamp Terminal Plate with screws.

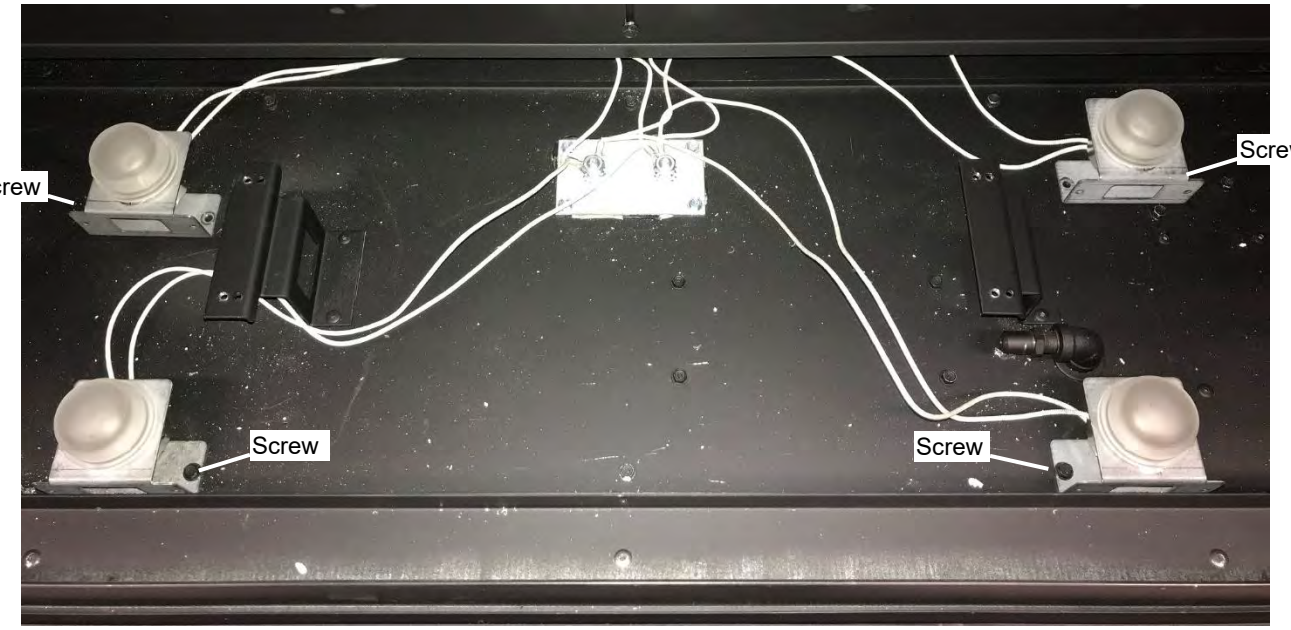


**STEP 4**: Place Lamps in position in firebox. Attach to fireplace with a single screw at the locations shown above for each unit. Replace burner tube and false bottom, along with pilot shield.

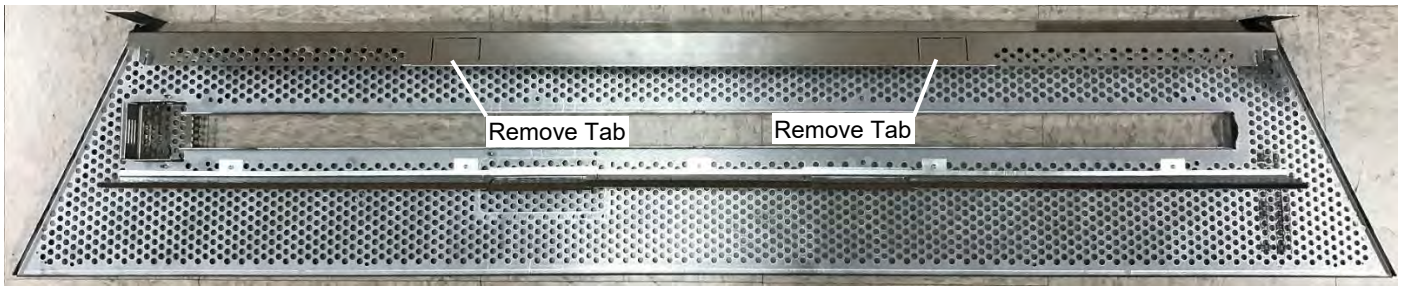


**STEP 5:** Flip False Bottom upside down. Remove Breakaway Tabs from Rear Deflector.

**STEP 6:** Replace Burner Tube.

**STEP 7:** Replace False Bottom. Ensure that rear lights are positioned in the openings left when Breakaway Tabs were removed in Step 5.

**STEP 8**: Connect switch wires between lamp wire and transformer (see schematic). Connect remaining lamp wire to transformer. Transformer can then be plugged in and the housing fastened to the bottom of the fireplace.

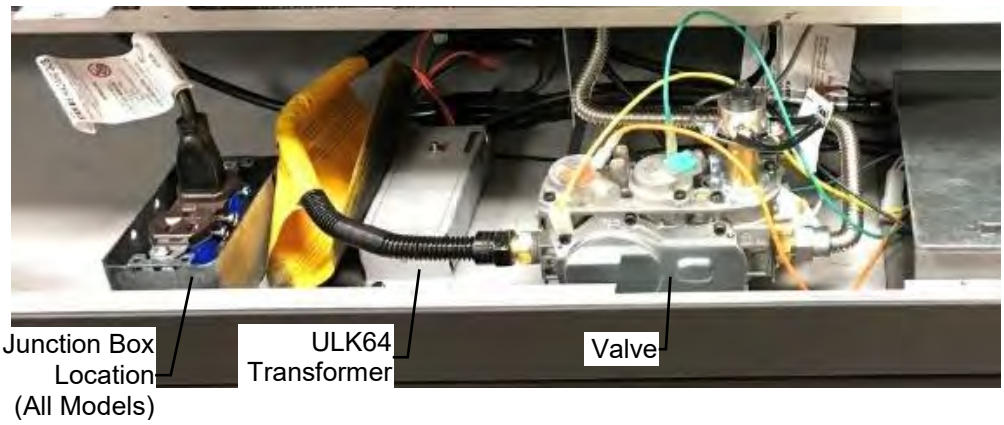

Please follow the current ANSI/NFPA 70 National Electrical Code in the USA and CAN/CSA C22.1 Canadian National Electrical Code in Canada.

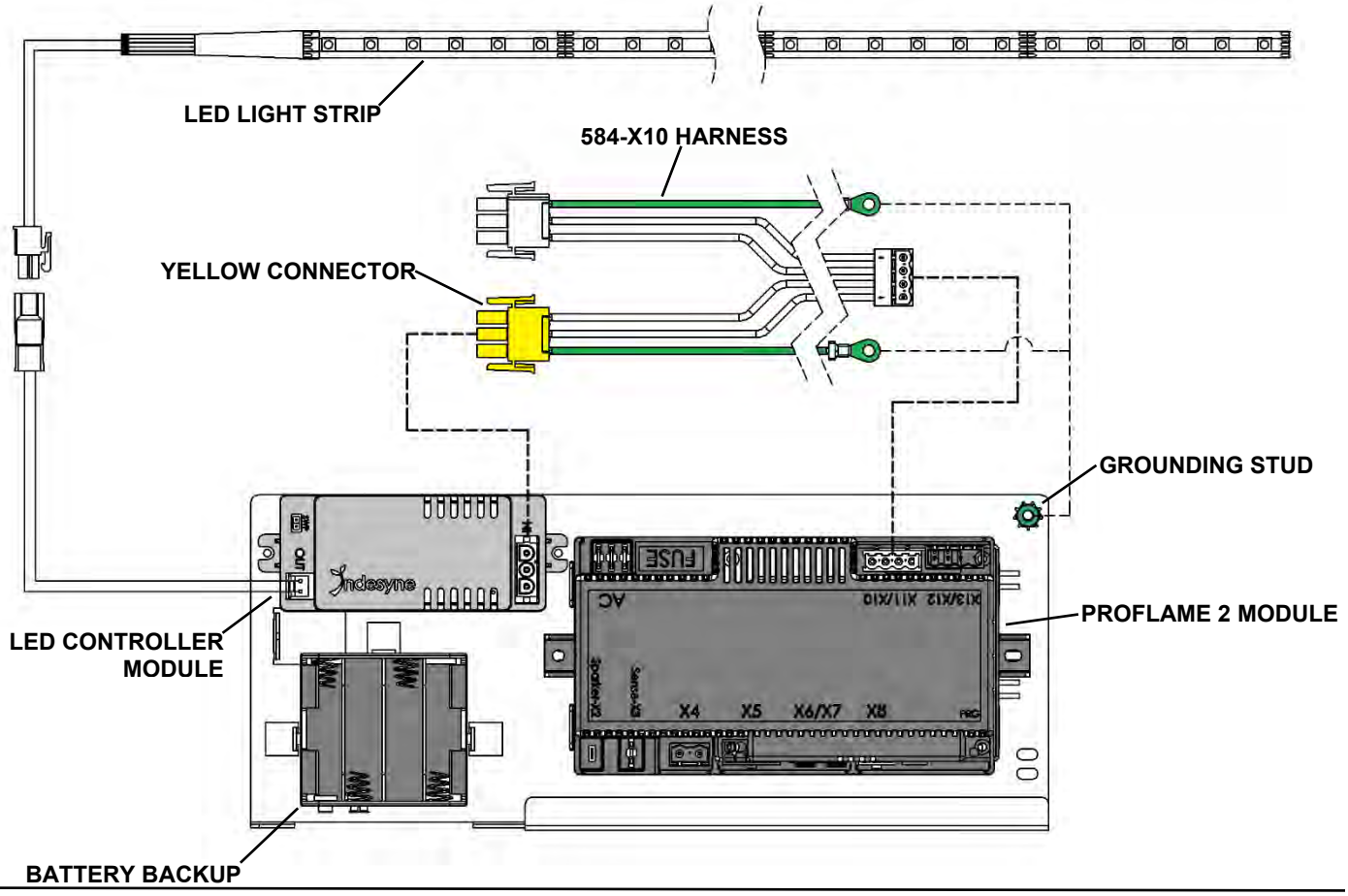


## MQZCVRB60 – LED Component

**LED Light Strip is Located below the Fireplace Opening.**

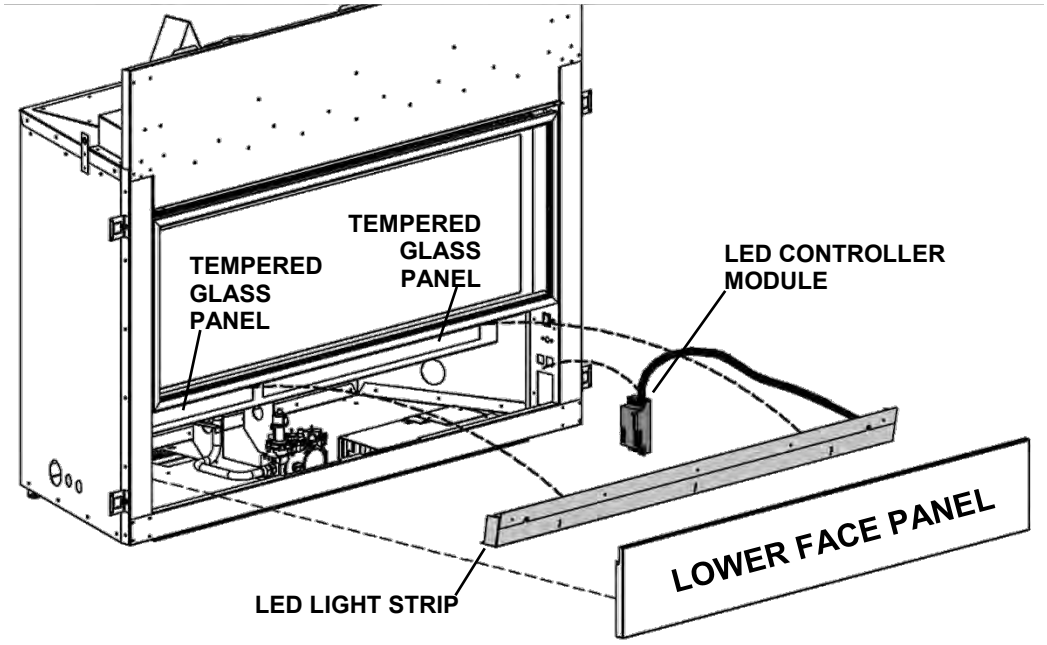

# TECHNICAL BULLETIN

**MODEL** MQRB47 / MQRB60
**DATE** February 26, 2020
**SUBJECT** **LED LIGHT STRIP INOPERABLE.**
**RESOLUTION** Replace LED light strip.

**60VL-LED48 PARTS**
1x LED Light Strip
2x Zip Tie

## TOOLS

**Recommended**
This installation requires a Phillips-head Driver, Needle-nose plier, and Side-cutter.

## CAUTION

**Wear Safety Glasses and Work Gloves**
To reduce possibility of injury, wear safety glasses and work gloves.

## REPLACEMENT PROCEDURE

1. **DISCONNECT ELECTRICAL POWER**
To avoid electrical shock, ensure to disconnect all electrical power sources to the appliance.

2. **REMOVE SAFETY BARRIER SCREEN AND LED DRIVER**
The gain access to the LED Light Channel, remove the Safety Barrier screen by lifting it up and swinging the lower portion out. The LED Light Channel is located below the Firebox Front Glass Door.

Using a Philips screwdriver, unfasten the screw holding the LED driver in place (see Figure 1). Using a needle-nose plier, compress the locking tab on the LED connector to release its cord (see Figure 2).

CAUTION: TO PREVENT CORD/CONNECTOR DAMAGE, DO NOT PULL THE LED CORD BEFORE DISENGAGING THE LOCK.

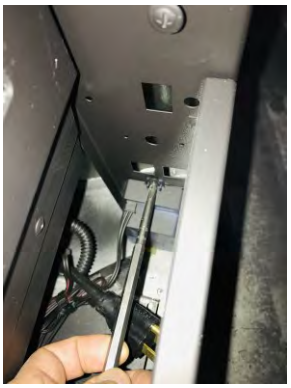
*Figure 1*

*Figure 2*

3. **REMOVE LED CHANNEL**
From bottom of Firebox, pull the LED Light Channel forward and guide it out of the fireplace. Unfasten the perforated LED Shield from the Light Channel to expose the LED Light Strip (see Figure 3).

NOTE: Make note of the original position and orientation of the old LED strip. The new LED Strip will be installed at the same location.

4. **REMOVE OLD LED LIGHT STRIP**
Cut the ties currently holding the LED Cord to the Channel (see Figure 4). Slowly but firmly, pull the old LED Strip.

NOTE: Ensure that all PSA Adhesive material is removed from the LED Light Channel. Using thinner or IPA, ensure the surface is clean. DO NOT DISCARD CORRUGATED CABLE SLEEVE.

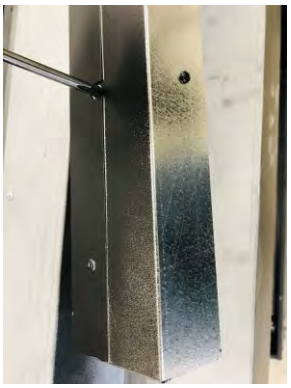
*Figure 3*

*Figure 4*

5. **INSTALL NEW LED LIGHT STRIP**
Remove PSA Adhesive Backing from new LED Light Strip. Position strip onto Channel and apply downward pressure for good adhesion.

CAUTION: TAKE CARE TO NOT DAMAGE LED CHIPS. Ensure the LED Light Strip is centered.

Route the cord out to the side and secure with the supplied Zip Ties (see Figure 5). Reinstall the LED Shield, and reverse the remaining steps to reinstall the LED Light Channel.

*Figure 5*

**CAUTION: CONTAINS STATIC SENSITIVE PRODUCT. TAKE CARE TO NOT DAMAGE LED CHIPS. ENSURE YOU ARE GROUNDED FROM STATIC ELECTRICITY BEFORE HANDLING THE LED LIGHT STRIP.**

# RBCB1 -Cannonballs- Installation Instructions

Assorted size and colors. Place randomly as desired inside fireplace.

**Can be used with MQ Glass, MQ Rock, MQ Stone or MQ Ember. Follow instructions for these accessories.**

## ⚠ NOTE

- **Pilot Area Must Not Be Covered, as delayed ignition can occur.**
- **Be Careful Not To Cover Any Part Of The Burner Tube As Cannonballs may become discolored or sooting may occur.**
- **For best flame pattern it is essential to spread supplied Bronze Glass directly onto burner tube.**

**Pilot Area Must Not Be Covered**

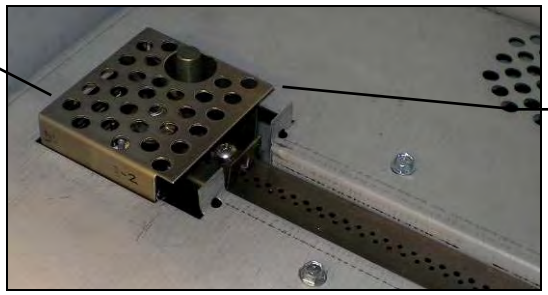

*Pilot Shield should be visually inspected monthly for signs of deterioration due to flame exposure. Replace if necessary.

# ZCVRB60 MQ Dealer Accessories

The following Accessories are available through MQ Dealers only.

| ACCESSORY ITEM | DESCRIPTION |
|---|---|
| | |
| **MQG5C** | Decorative Ember Glass –Bronze |
| **MQG5W** | Decorative Glass 1/2" White |
| **MQG5A** | Decorative Ember Glass Cobalt Blue |
| **MQG5B** | Decorative Ember Glass - Black |
| **MQG5ZG** | Decorative Glass- Zircon Glacier Ice |

Use of any other glass can alter the performance of the unit and is not covered under warranty.

Discoloration of Glass Media may occur if placed on the burner, this is not covered under warranty.

## CRUSHED GLASS MEDIA

Spread the glass embers onto the false bottom and burner. Ensure the glass embers do not excessively overlap as this will affect the flame pattern. Use care when placing glass embers near the pilot area so as not block or have the glass fall over the crossover holes from the pilot to the burner, as delayed ignition can occur.

The following types of glass are approved:

- **½" Ember Glass Material from American Fireglass.**

Maximum amount: Natural Gas is 15 lbs, Propane units 10 lbs.

- **Liquid Glass from Firegear.**

Maximum amount: Natural gas is 15 lbs, not recommended for Propane appliances.

*Pilot Shield should be visually inspected monthly for signs of deterioration due to flame exposure. Replace if necessary.

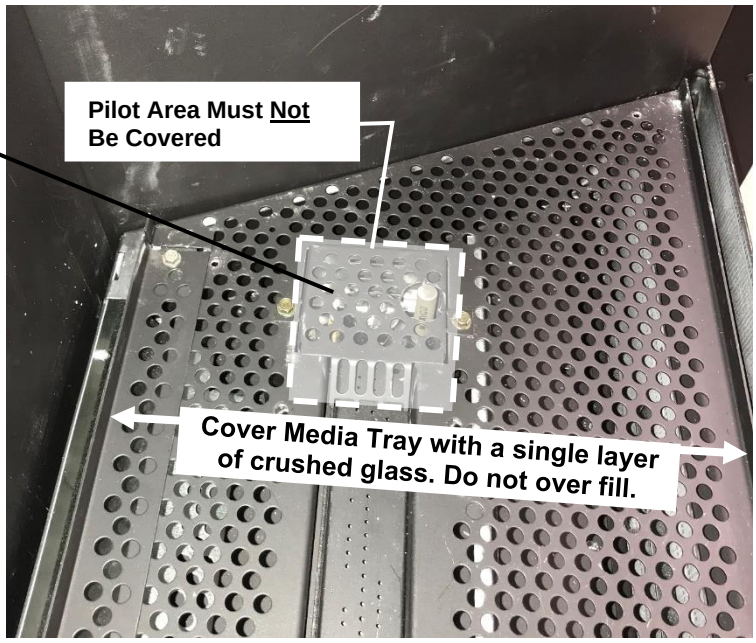


- **MQ46D Driftwood Log Set- 3pcs.**

**NOTE**

- **Pilot Area Must Not Be Covered, as delayed ignition can occur.**
- **Do Not Cover any part of the burner tube with logs as sooting may occur.**
- **For best flame pattern it is essential to spread supplied 1/2" Crushed Glass or MQEMBER chunks directly onto burner tube.**

- Place **Log 1** on left side of fireplace against the back wall of the firebox.
- Place **Log 2** on the right side of fireplace against the back wall of the firebox and onto Log 1 as shown.
- Place **Log 3** in front of the burner in the center of fireplace as shown.

**Can be used with MQ Glass, MQ Rock, MQ Stone or MQ Ember. Follow instructions for these accessories.**

- **MQROCK2, MQROCK3, MQRBD1 -** Place rocks randomly onto False Bottom.

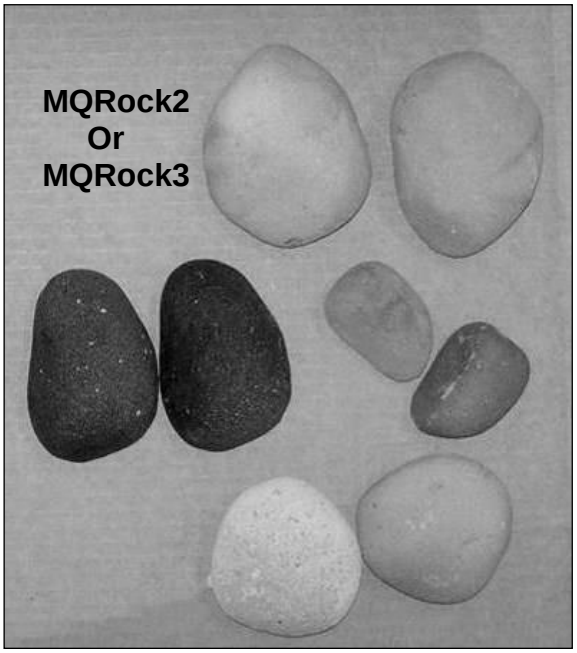


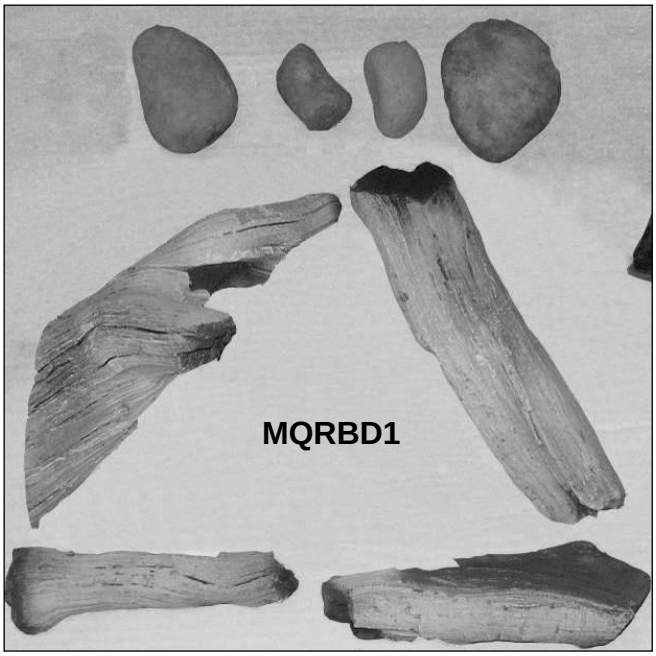


**⚠ NOTE**

- **Pilot Area Must Not Be Covered, as delayed ignition can occur.**
- **Do Not Cover any part of the burner tube with logs as sooting may occur.**
- **For best flame pattern it is essential to spread supplied Bronze Glass directly onto burner tube.**

- **MQ STONE DECORATIVE STONE SET-** Place Stones onto False Bottom randomly. Do Not cover Pilot Area. Not all stones will be used on some models.

- **MQEMBER-** Place these glowing ember chunks randomly. Embers may be used with or without other accessories.

## MQRBD3 -5 Piece Driftwood Log Set- OPTION

Can be used with MQ Glass, MQ Rock, MQ Stone or MQ Ember. Follow instructions for these accessories.

**- Logs as Shipped -**

### ⚠ NOTE

- **For best flame pattern it is essential to spread supplied Crushed Glass or MQEMBER directly onto burner tube.**
- **If sooting occurs, one or more logs may be removed.**

**Setup Option 1 – Top View**

**Setup Option 1- Front View**

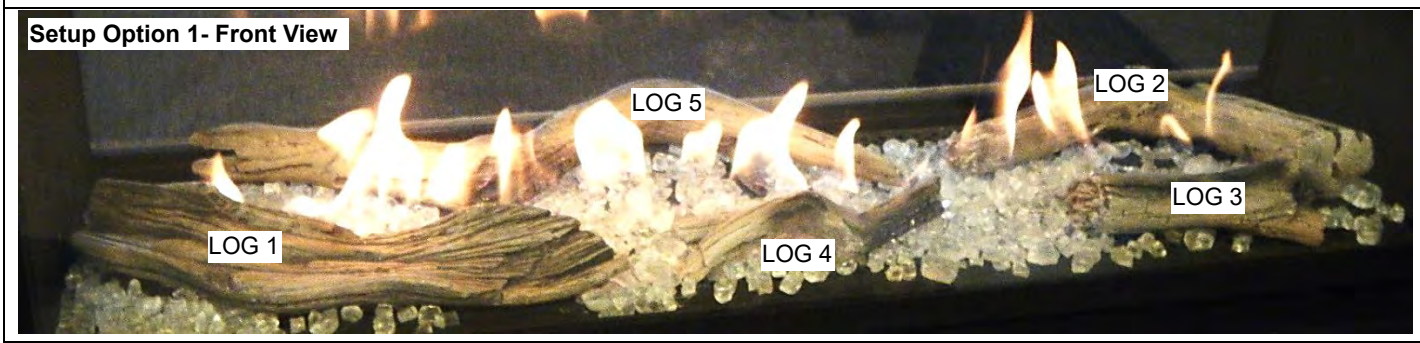


**Setup Option 2 – Top View**

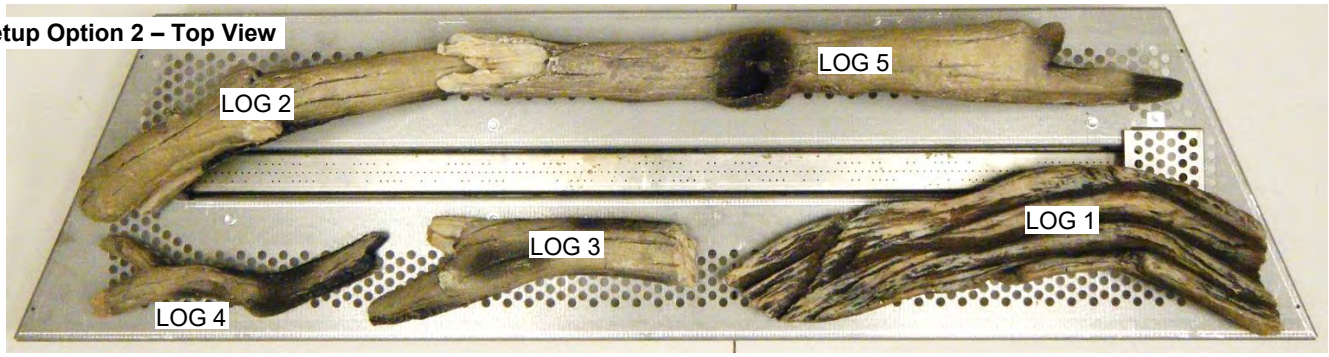


**Setup Option 2 Front View**

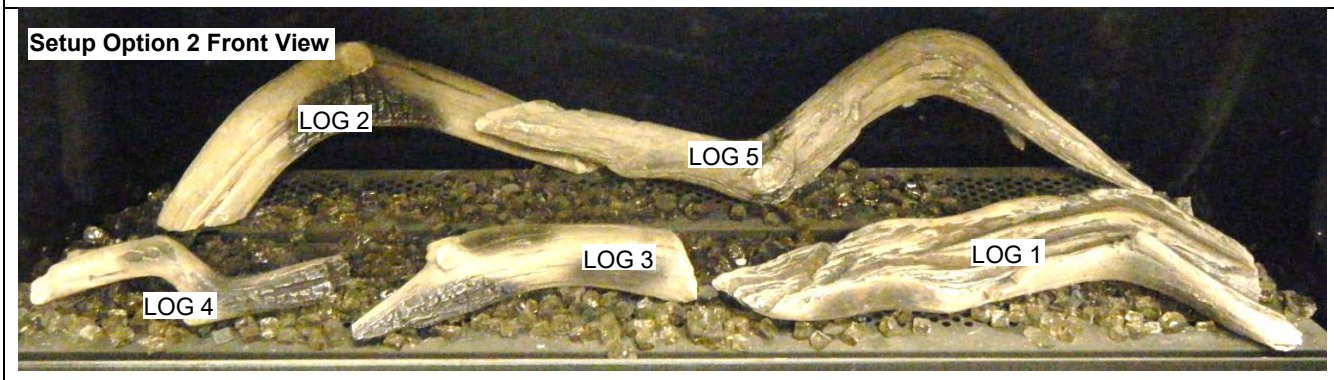

## MQRBD4 - 3 Piece Driftwood Log Set Option

Can be used with MQ Glass, MQ Rock, MQ Stone or MQ Ember. Follow instructions for these accessories.

Do Not place Logs over Pilot area.

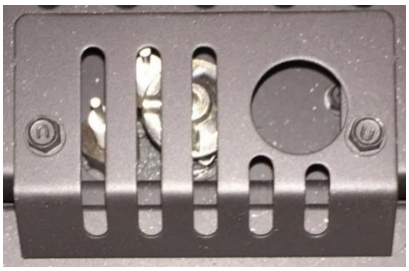

### ⚠ NOTE

- **For best flame pattern it is essential to spread supplied Crushed Glass or MQEMBER directly onto burner tube.**
- **If sooting occurs, one or more logs may be removed.**

## MQRBRW - Birch Log Set (5 Pieces) - OPTION

Can be used with MQ Glass, MQ Rock, MQ Stone or MQ Ember. Follow instructions for these accessories.

**Do Not place Logs over Pilot area.**

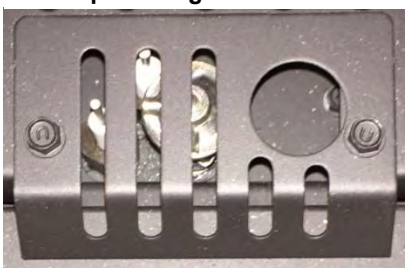

### ⚠ NOTE

- **For best flame pattern it is essential to spread supplied Crushed Glass or MQEMBER directly onto burner tube.**
- **If sooting occurs, one or more logs may be removed.**

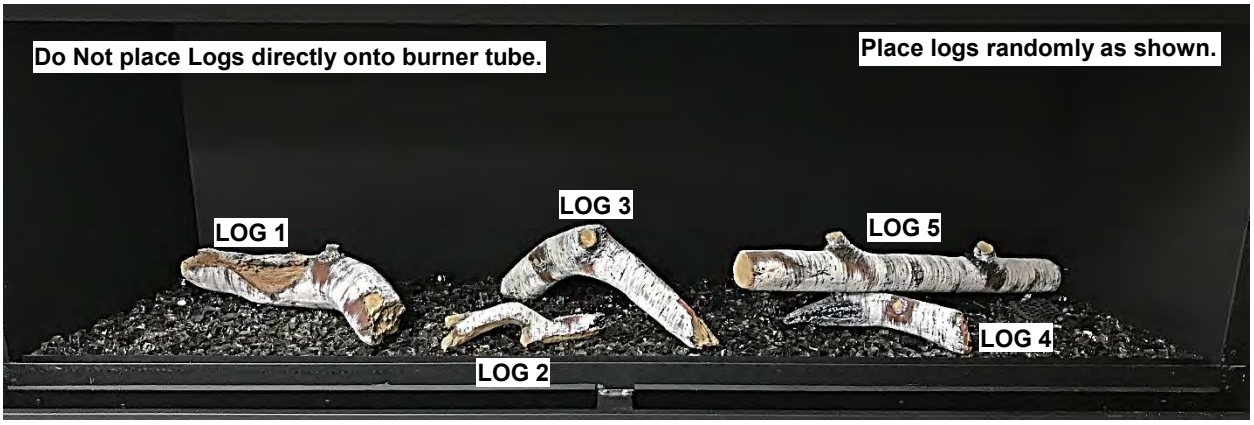

## MQLOAK1 Log Set– Serene 47, 60, 72

Can be used with MQ Glass, MQ Rock, MQ Stone or MQ Ember. Follow instructions for these accessories.

**⚠ NOTE**

- **Pilot area must not be covered, as delayed ignition could occur**
- **For best flame pattern it is essential to spread supplied Crushed Glass or MQEMBER directly onto burner tube.**
- **If sooting occurs, one or more logs may be moved, or removed.**

**5-piece set.**

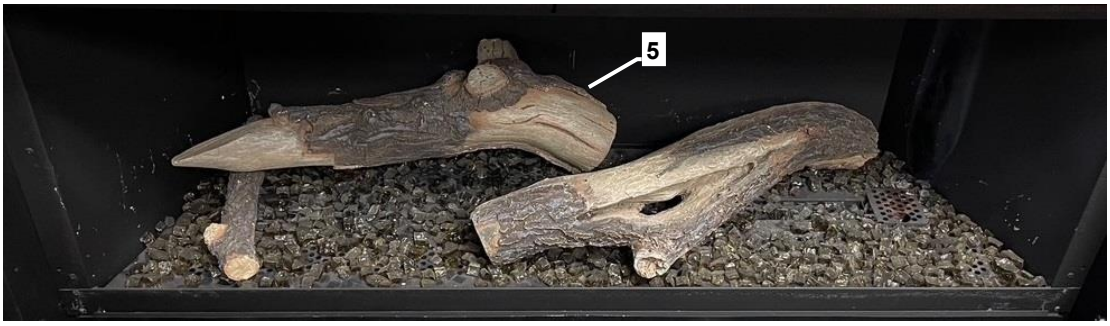

## MQLOAK2 (To be used with MQLOAK1) Log Set- Serene 60, 72 & Enclave 60, 72

Can be used with MQ Glass, MQ Rock, MQ Stone or MQ Ember. Follow instructions for these accessories.

**⚠ NOTE**

- **Pilot area must not be covered, as delayed ignition could occur**
- **For best flame pattern it is essential to spread supplied Crushed Glass or MQEMBER directly onto burner tube.**
- **If sooting occurs, one or more logs may be moved, or removed.**

**4-piece set.**

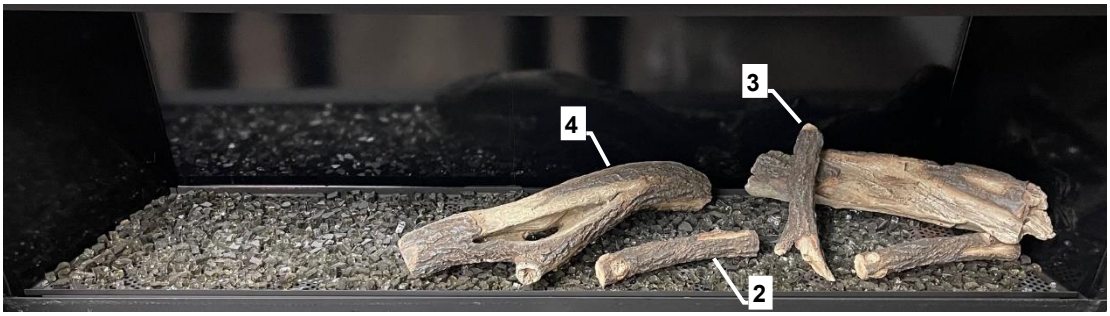


**Continued on next page**

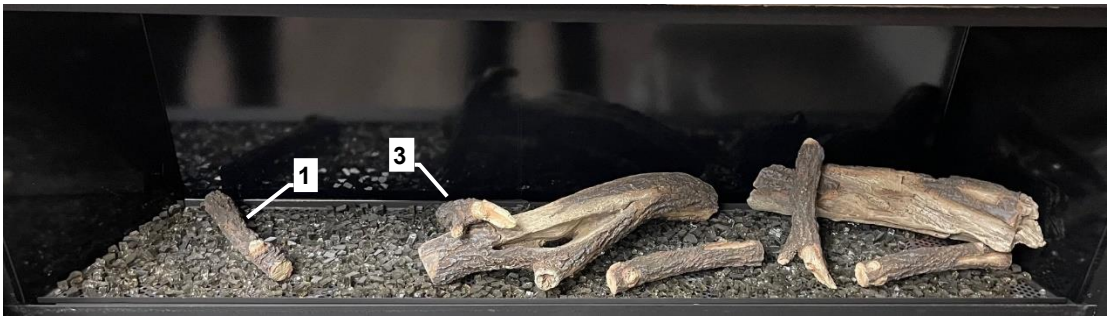
1
3

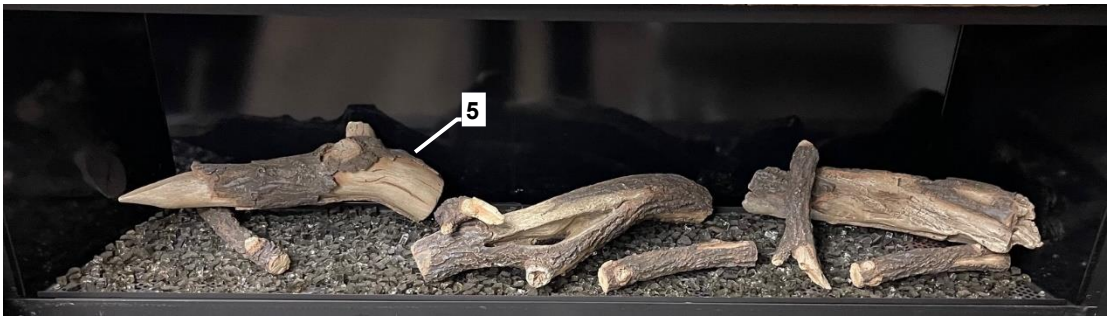
5

1

# IPI Electronic Ignition System

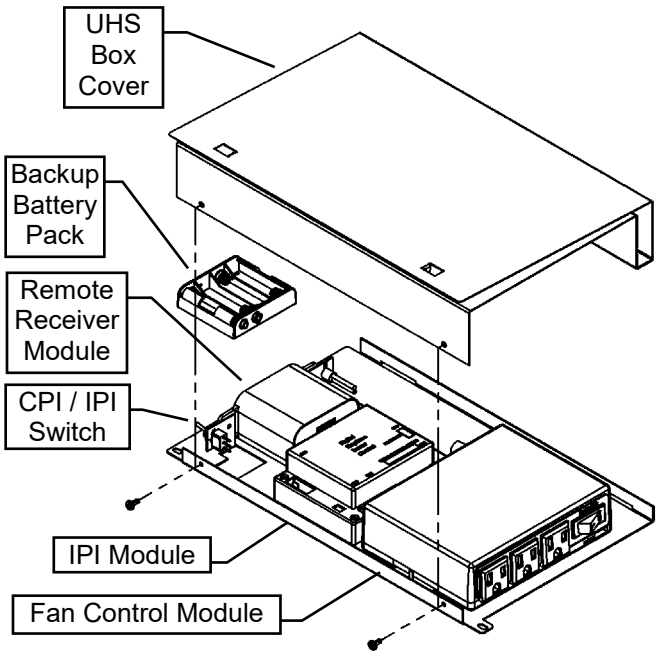


**Overview**

The IPI system is an advanced burner controller that provides you with the option of having either a Standing-Pilot, or an intermittent igniting system. This alternating mode is controlled by the CPI/IPI Switch (Continuous Pilot Ignition/Intermittent Pilot Ignition) located on the IPI System Box. The difference between a Standing-Pilot and an Intermittent-Pilot is in whether the pilot stays lit or shuts off:

In Standing-Pilot, the pilot assembly is lit by the IPI Main Module and continues to stay lit until 1) the CPI/IPI Switch is switched to the IPI position; 2) a loss of electrical power (battery and AC source), 3) the flame sensor loses its signal, 4) the fuel supply discontinues, or 5) the IPI Main Module malfunctions.

In the Intermittent-Pilot mode, the pilot shuts off when the appliance is not in use. The advantage of this mode is that fuel is not consumed when the fireplace is not operating.

NOTE: In some jurisdictions Intermittent-Pilot is required. That means the pilot cannot remain lit when the appliance is not operating.

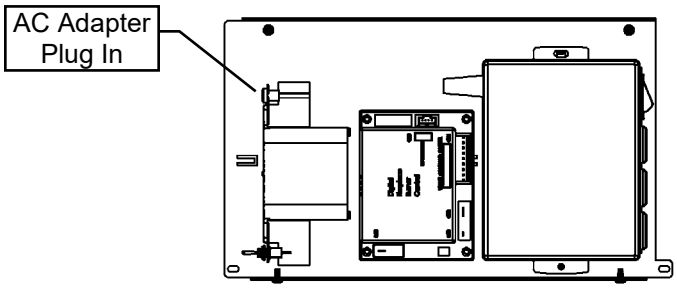


**Components**

The core of the IPI system is the Main Module and the IPI Valve. With these two components the system is able to operate a gas fireplace. There are also other components available to complement the IPI system.

IPI System Cover: Is essential in keeping the components at their proper operating temperatures. **DO NOT OPERATE THE APPLIANCE WITHOUT THIS COVER.**

Modulating Servo Motor: Is an add-on valve component that permits HI/LO functionality to be controlled by the remote. Contrary to this feature is a Manual HI/LO Control Knob. The Modulating Servo Motor requires the Remote system to be present.

Backup Battery Pack: This component permits the IPI system to operate without the need for an external AC Adapter power source. The advantage to using the battery backup is that in the case of a power failure, the appliance is still operable.

**NOTE:** In certain instances the IPI Main Module requires resetting. This can occur if the system is unable to ignite the pilot or the main burner in the allotted time period. The IPI is programmed to lockout all commands. To reset this lockout you must deplete the system of all electrical power. This means to remove the batteries from the Battery Pack, remove the batteries from the Remote Receiver (if applicable), and disconnect the AC Adapter from the system. Leave the power off for approximately 25 seconds to clear its lockout.

Remote Receiver: This component provides the capability of controlling the appliance with a wireless remote transmitter.

**Standing Pilot Mode for Colder Climates (Below Freezing)**

For IPI models it may be necessary to set the appliance to Standing Pilot mode to maintain heat in the cavity. The purpose of this procedure is to prevent cold air from penetrating the chimney and then onto the living space. Therefore, when the internal temperature is slightly elevated the fireplace is able to freely exhaust its combustion and hence making it easier to startup.

**NOTE:** The pilot system for this appliance may be equipped with a Seven Day Timer, in which case the pilot flame will be extinguished if the main burner has not been turned ON for seven days. This Seven Day Cycle is reset every time the main burner is cycled ON / OFF and the pilot remains lit. If more than seven days has passed since the main burner has been cycled ON / OFF and the pilot is also out, follow the procedures described in this manual to light the pilot.

# Proflame 1 -Remote Control Operation-

The Proflame GTM is configured to control the on/off main burner operation, its flame levels, and provides on/off and Smart *thermostatic control of the appliance.

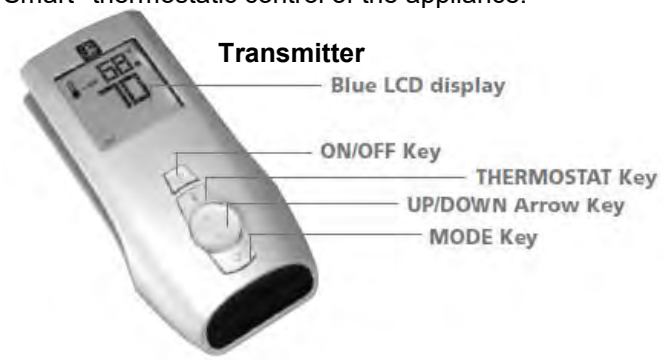

**Transmitter**
The Transmitter is powered by 3 AAA type batteries. A Mode Key is provided to Index between the features and a *thermostat Key is used to turn on/off or index through *thermostat functions

**Remote Receiver**
The Receiver connects directly to the gas valve and stepper motor with a wiring harness. The Receiver is powered by 4 AA type batteries. The Receiver three position slider switch can be set to one of three positions: ON (Manual Override), Remote (Remote control) or Off.

**Initializing the System for the first time**
Install 4 AA batteries into the receiver battery bay. Install 3 AAA type batteries in the Transmitter battery bay.
Place the 3 position slider switch in the “Remote” position. Insert the end of a paper clip into the hole marked “PRG” on the Receiver front cover. The Receiver will “beep” three (3) times to indicate that it is ready to synchronize with a Transmitter. Push the On button. The Receiver will “beep” four times to indicate the Transmitter’s command is accepted. The system is now initialized.

**Temperature indication Display**
With the system in the “OFF” position, press the *thermostat Key and the Mode Key at the same time. Look at the LCD screen on the Transmitter to verify that a C or F is visible to the right of the Room Temperature display.

**Turn the Appliance On or Off**
Press the ON/OFF Key on the Transmitter

**Remote Flame Control**
The Proflame GTM has six (6) flame levels. Pressing the Down Arrow Key once will reduce the flame height by one step until the flame is turned off. The Up Arrow Key will increase the flame height each time it is pressed. If the Up Arrow Key is pressed while the system is on but the flame is off, the flame will come on in the high position.

**Room *thermostat ( Transmitter Operation)**
The Remote Control can operate as a room *thermostat. To activate this function, press the *thermostat Key. The LCD display on the Transmitter will change to show that the room *thermostat is “ON” and the set temperature is now displayed. To adjust the set temperature, press the Up or Down Arrow Keys until the desired set temperature is displayed on the LCD screen of the Transmitter.

**Smart *thermostat (Transmitter Operation)**
The Smart *thermostat function adjusts the flame height in accordance to the difference between the set point temperature and the actual room temperatures. As the room temperature gets closer to the set point the Smart Function will modulate the flame down. To activate this function, press the *thermostat Key until the word "SMART" appears to the right of the temperature bulb graphic. To adjust the set temperature, press the Up or Down arrow Keys until the desired set point temperature is displayed.

**Key Lock Function**
This function will lock the keys to avoid unsupervised operation. To activate this function, press the MODE and the UP Arrow Key at the same time. To de-activate this function, press the MODE and the UP Arrow Key at the same time.

**Low Battery Detection**
**Transmitter -** When the Transmitter batteries are low, a Battery Icon will appear on the LCD display of the Transmitter.
**Receiver -** When the Receiver batteries are low, No “beep” will be emitted from the Receiver when it receives an On/Off command from the Transmitter. When the batteries are replaced the “beep” will be emitted from the Receiver when the ON/OFF Key is pressed (See Initializing the System for the first time).

**Manual Bypass Of The Remote System**
If the batteries of the Receiver or Transmitter are low or depleted, the appliance can be turned on manually by sliding the three position slider switch on the Receiver to the ON position. This will bypass the remote control feature and the appliance main burner will come on if the gas valve is in the “On” position.

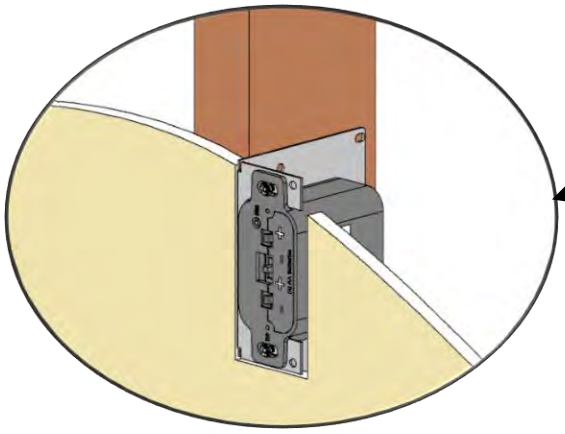

**<u>Wall Mount Option</u>**

**10ft. Extension Harness (Part No. 1001-P904SI) required.**

- The Remote Receiver can be mounted on a vertical wall stud using the DCHS as a mounting bracket.
- Ensure that the face is protruding 1/2” so that the face plate will be flush on the face of the wall.
- Drywall cutout size is 2” wide by 4-1/8” tall.
- Must be installed within 10ft of valve assembly (6ft recommended).

# SIT Proflame 1 -IPI System Parts List-

| | PART NO. | DESCRIPTION |
|---|---|---|
| 1. | 1006-P002SI | Valve IPI Hi/Lo NG |
| 2. | 1006-P003SI | Valve IPI Hi/Lo LP |
| 3. | 1002-P322SI | IPI Ignition Board |
| 4. | 1002-P047SI | Pilot Assembly-LP -24” Wire |
| 5. | 1002-P033SI | Pilot Assembly-NG -24” Wire |
| 6. | 1002-P850SI | AC Wall Adapter |
| 7. | 1002-P12BH | Battery Pack |
| 8. | 1001-P280SI | TC - Tubing W/Fittings 1/8 2.182.280 |
| 9. | 1001-P166SI | TC - Orifice Pilot NG 977.166 #62 (IPI) |
| 10. | 1001-P168SI | TC - Orifice Pilot LP 977.168 #35 (IPI) |
| 11. | 1002-P012SI | IPI Stepper Kit - LP 907.012 |
| 12. | 1002-P013SI | IPI Stepper Kit - NG 907.013 |
| 13. | 1002-P014SI | IPI Reg Kit - LP Hi-Lo 907.014 |
| 14. | 1002-P016SI | IPI Reg Kit - NG Hi-Lo 907.016 |
| 15. | 1002-P017SI | TC - Electrode Cable & Sparker IPI 915.017 24" |
| 16. | 1002-P119SI | TC - Electrode Cable & Sparker IPI 35" (Infinite, ZCVRB47, VRB46) |
| 17. | 1002-P903SI | TC - Electrode Flame Sense IPI 007.253/915.903 24" |
| 18. | 1002-P910SI | TC - Electrode Flame Sense 35" (Infinite, ZCVRB47, VRB46) |

**NOTE:** Fan and / or Light Options are not available on some fireplaces. **Check with your dealer.**

**Proflame Transmitter**
**1001-P023SI**

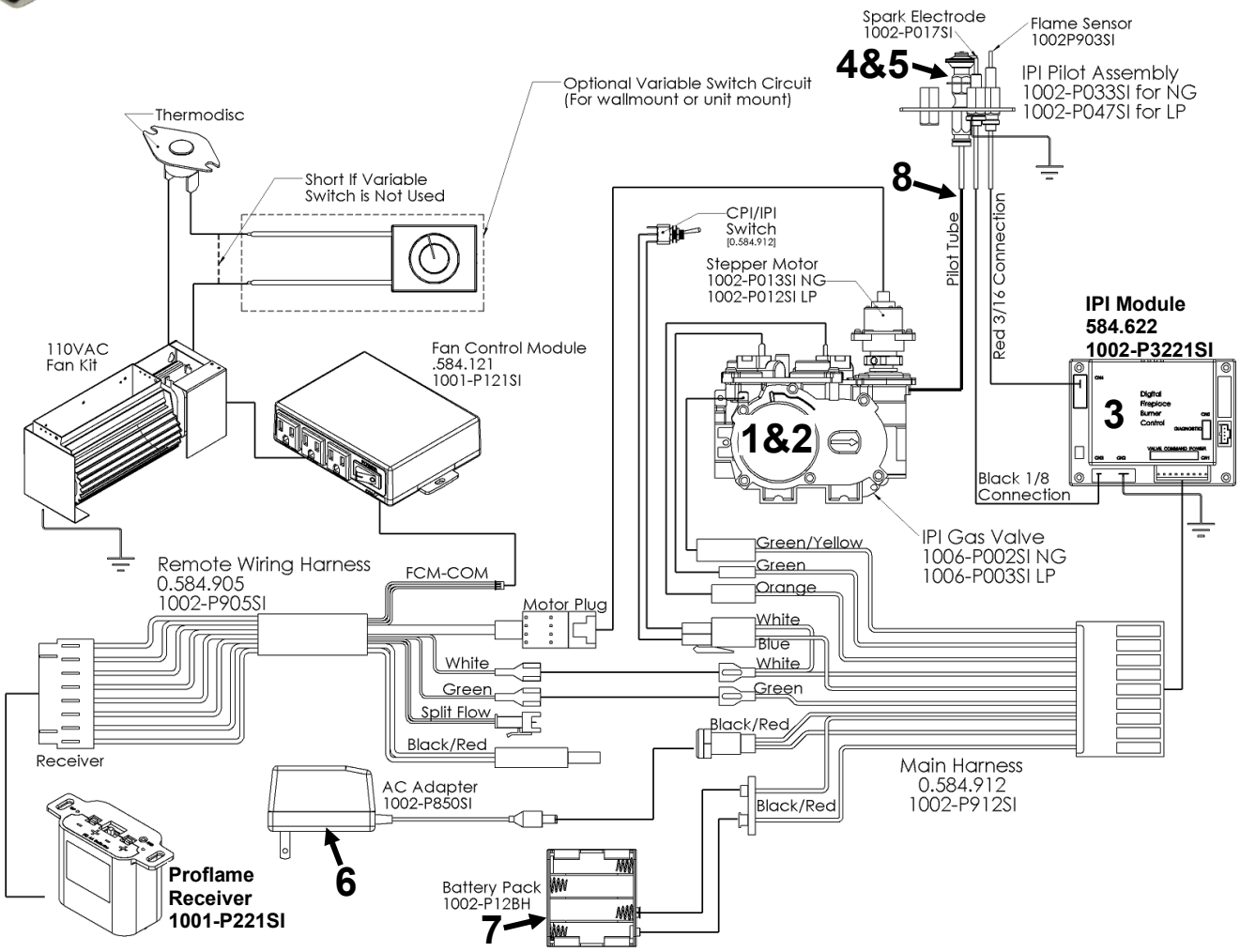

# SIT Proflame 1 Configuration #1: Basic Manual HI/LO and ON/OFF capabilities

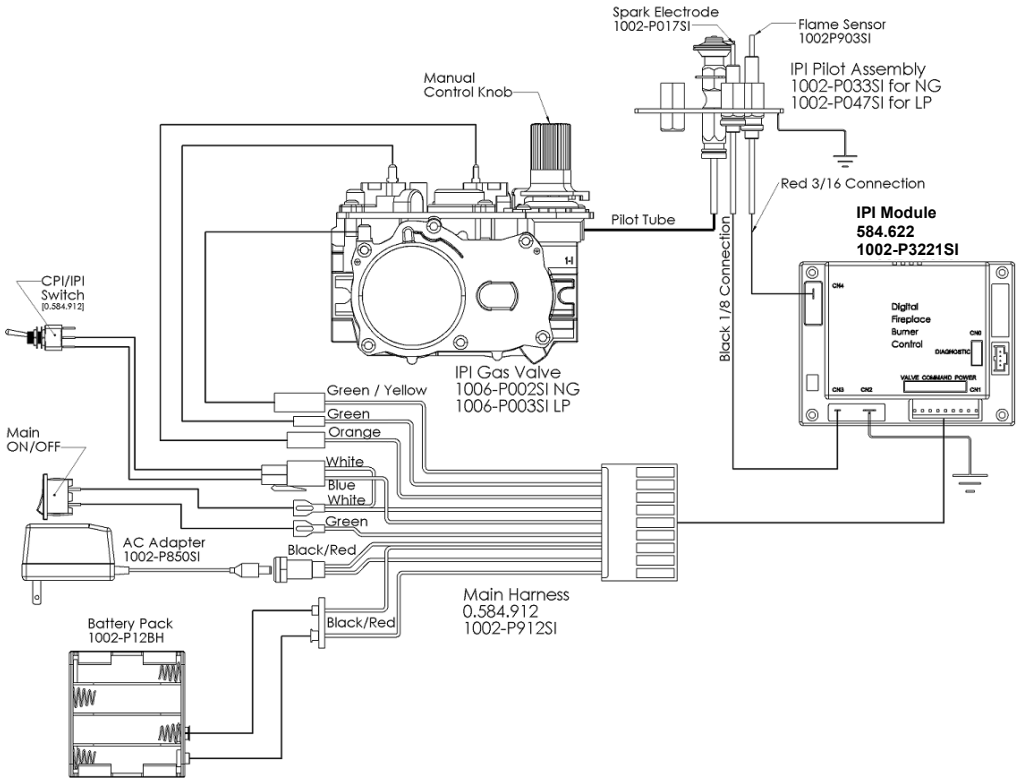


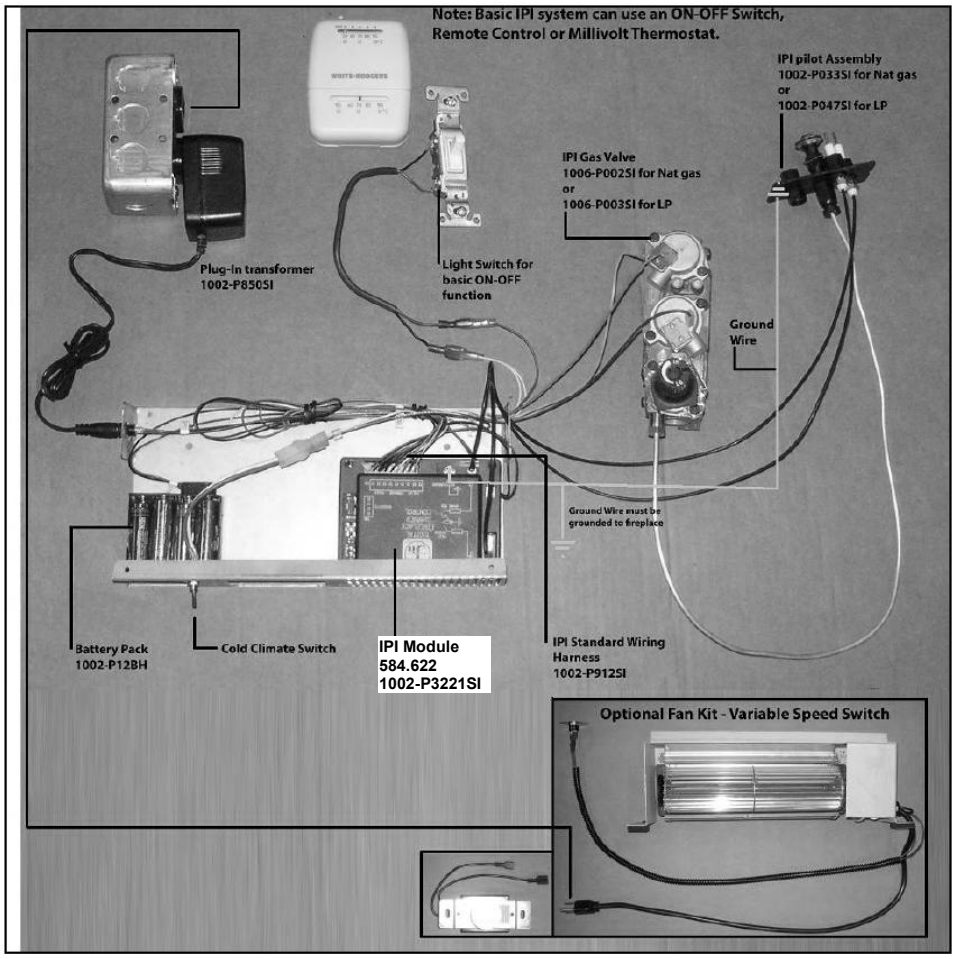

# SIT Proflame 1- Configuration #2: Remote ON/OFF and Manual HI/LO Capabilities

**OPTIONAL: For units with remote HI/LO capabilities, a modulating servo is required to be installed on the valve. The connectors to this servo must be connected to the Remote Harness as shown.**

**SCHEMATIC**

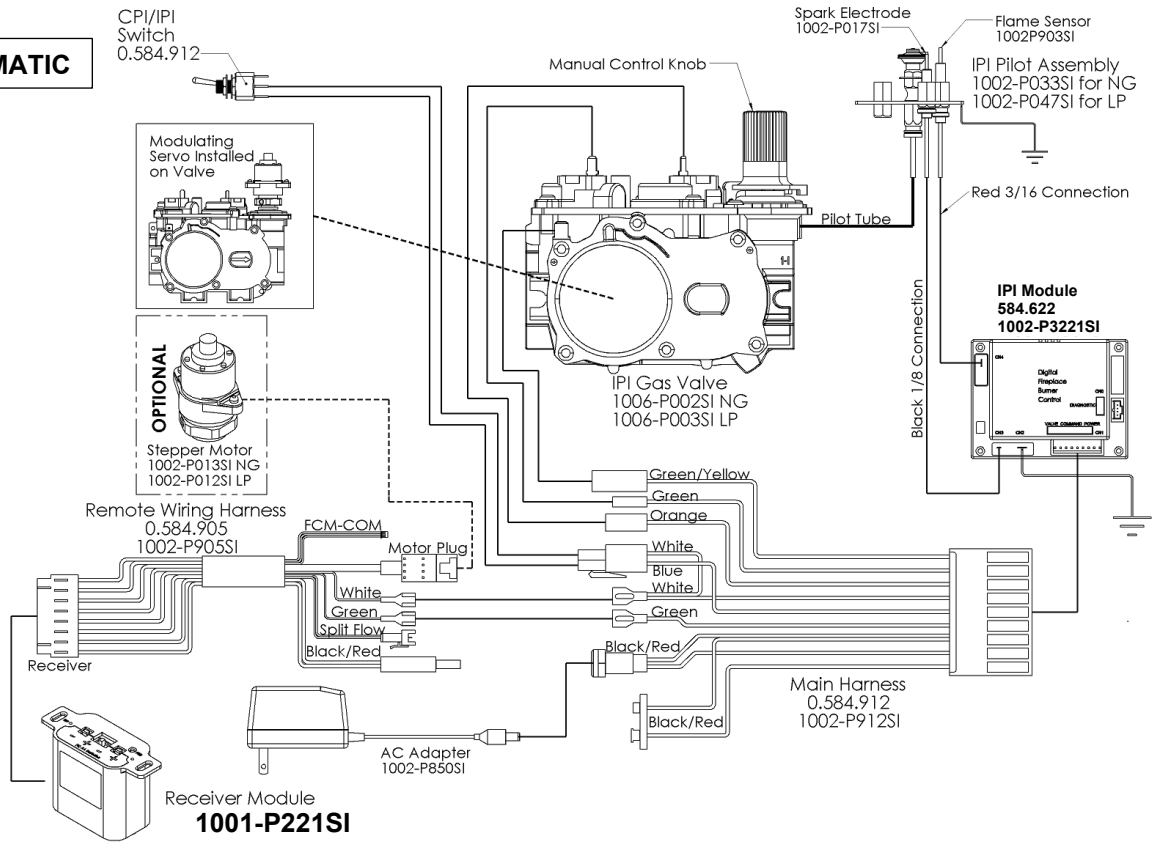


**PICTURE**

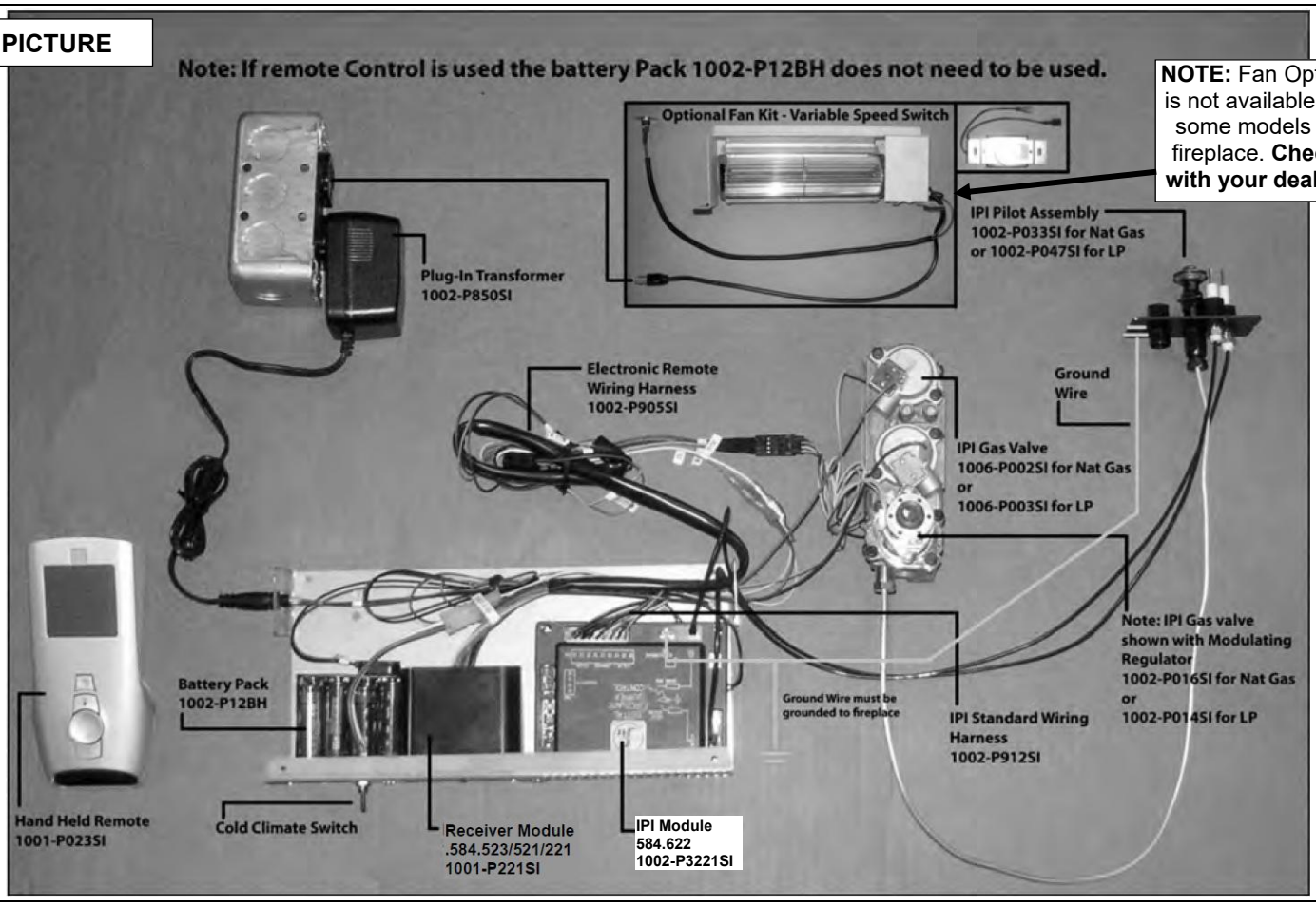


**NOTE:** Fan Option is not available on some models of fireplace. **Check with your dealer.**

## SIT Proflame 1 -Operating Receiver Without Batteries- GT / EGT / GTM / EGTM Remotes

**-Wiring Harness P/N 1002-P906si required for both IPI & Millivolt systems.**
**-Millivolt Systems will also require Power Adapter P/N 1002-P850si.**

The Remote Receiver & IPI or Millivolt system can be powered by the AC Adapter. This is advantageous if you do not want to use batteries. Simply connect the AC Adapter into the Remote Control Wiring Harness as per the diagrams below.

IPI System EGTM

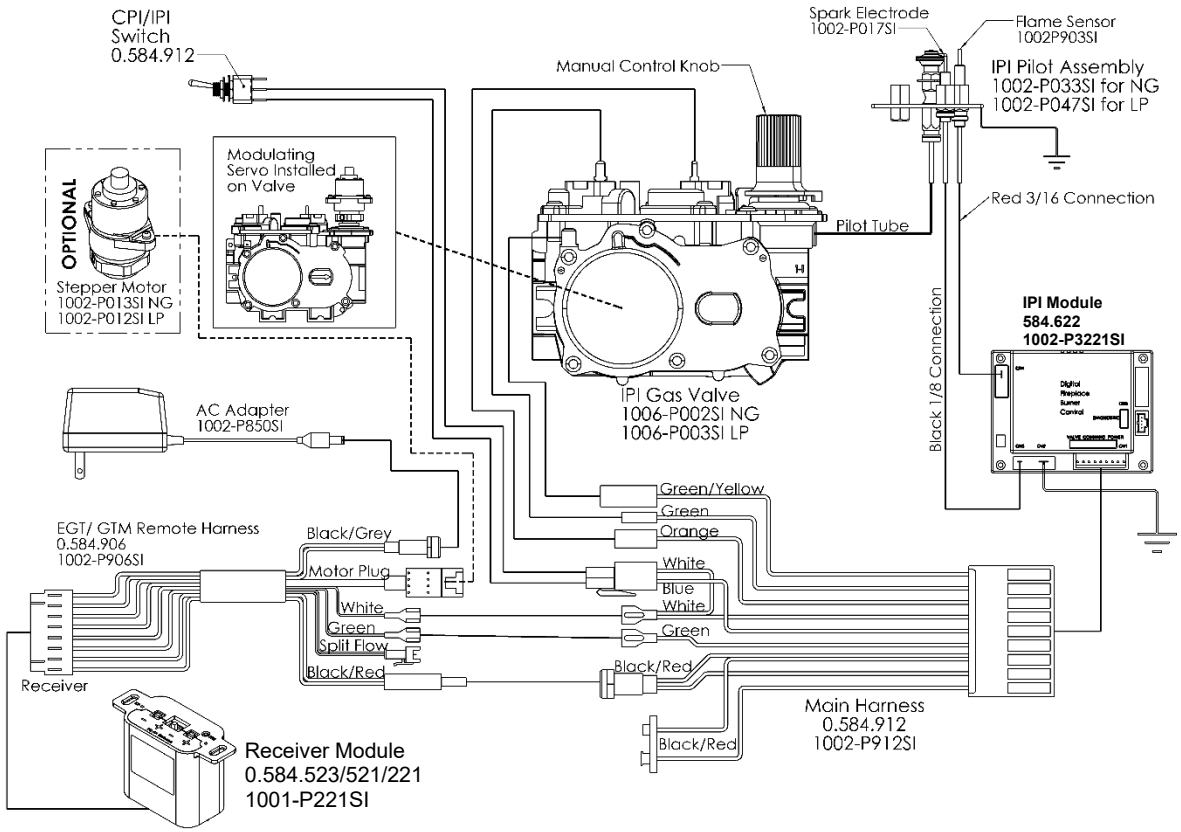


Millivolt System GTM

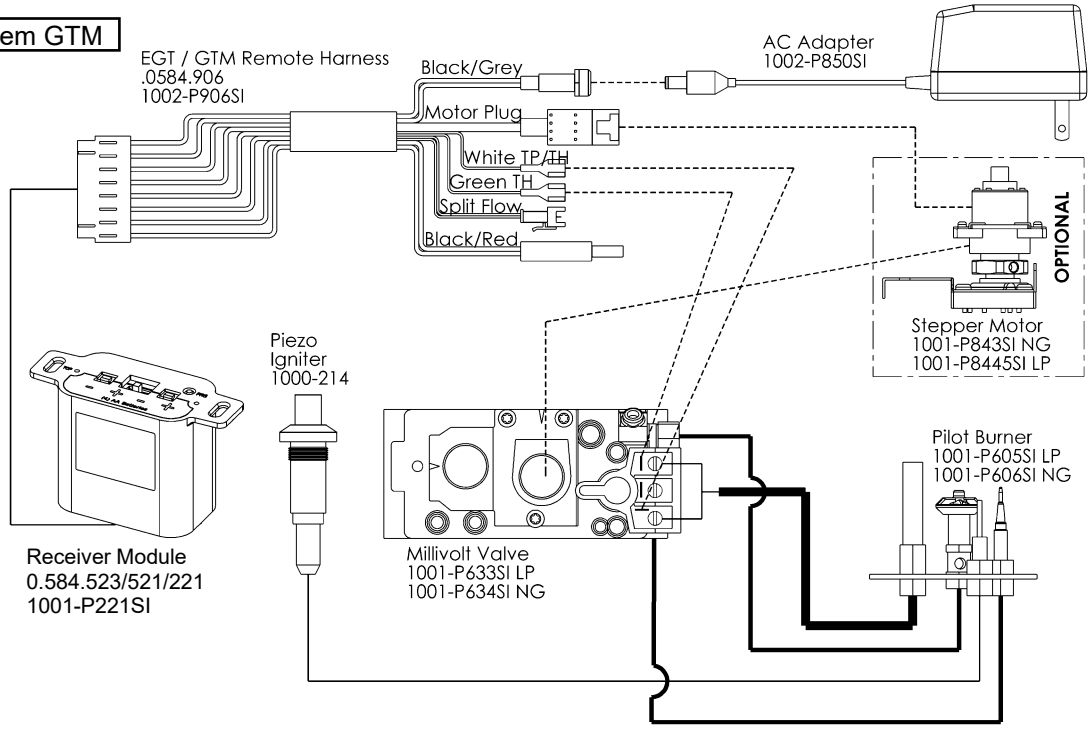

# SIT Proflame 1- Configuration #3: Remote ON/OFF, variable HI/LO, and fan capabilities

Refer to the fan installation/removal section for fan installation.

**SCHEMATIC**

**NOTE:** This Configuration is not available on all models of fireplace. **Check with your dealer.**

Spark Electrode 1002-P017SI
Flame Sensor 1002P903SI
IPI Pilot Assembly 1002-P033SI for NG 1002-P047SI for LP
Optional Variable Switch Circuit (For wallmount or unit mount)
Thermodisc
Short If Variable Switch is Not Used
CPI/IPI Switch [0.584.912]
Stepper Motor 1002-P013SI NG 1002-P012SI LP
Pilot Tube
Red 3/16 Connection
IPI Module 584.622 1002-P3221SI
110VAC Fan Kit
Fan Control Module .584.121 1001-P121SI
Black 1/8 Connection
IPI Gas Valve 1006-P002SI NG 1006-P003SI LP
Green/Yellow
Green
Orange
Remote Wiring Harness 0.584.905 1002-P905SI
FCM-COM
Motor Plug
White
Blue
White
Green
White
Green
Split Flow
Black/Red
Black/Red
Receiver
AC Adapter 1002-P850SI
Main Harness 0.584.912 1002-P912SI
Black/Red
Receiver Module 0.584.523 1001-P271SI
Battery Pack 1002-P12BH

**PICTURE**

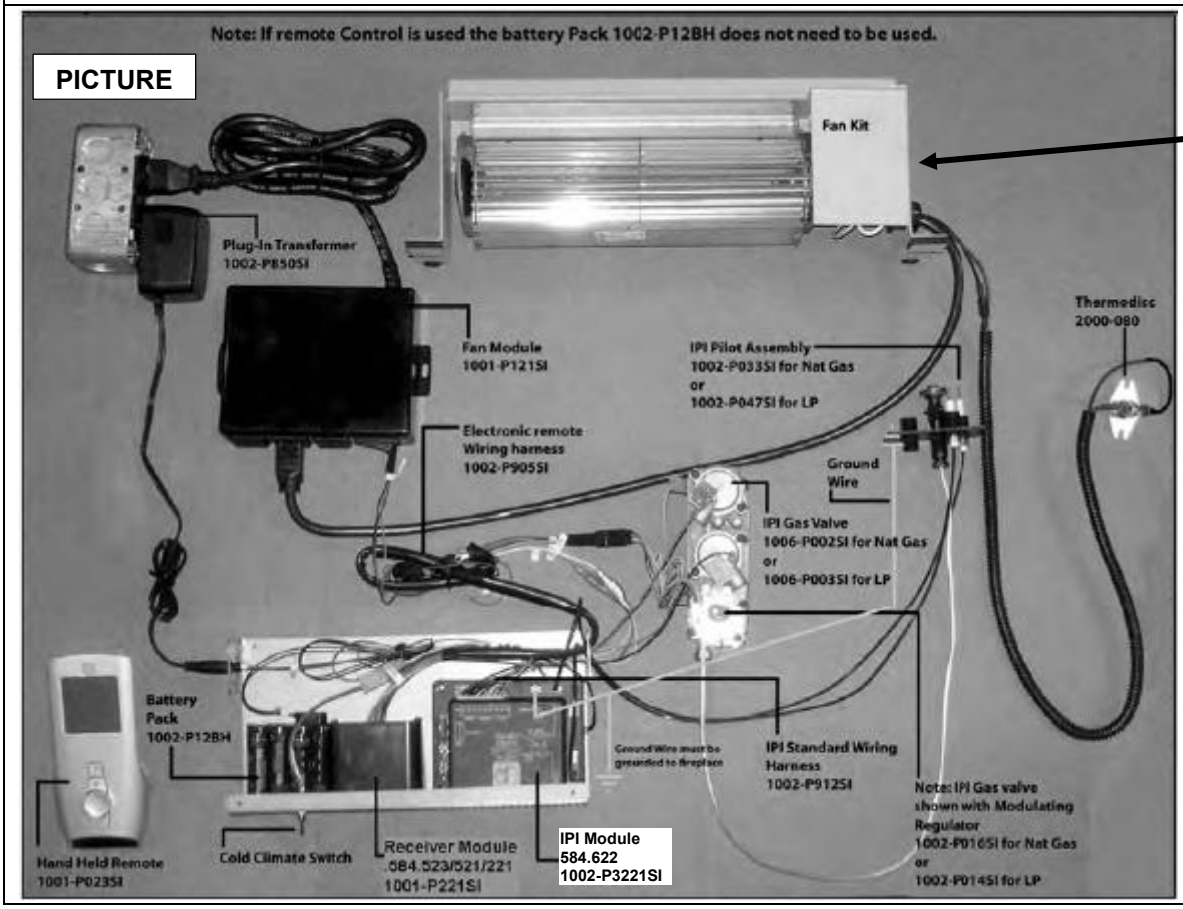


**NOTE:** Fan Option is not available on some models of fireplace. **Check with your dealer.**

## - IPI LIGHTING INSTRUCTIONS -

## FOR YOUR SAFETY READ BEFORE LIGHTING

**WARNING: If you do not follow these instructions exactly, a fire or explosion may result causing property damage, personal injury or loss of life.**

A. This appliance is equipped with an ignition device which automatically lights the pilot. Do not try to light the pilot by hand.

B. **BEFORE OPERATING** smell around the appliance area for gas. Be sure to smell next to the floor because some gas is heavier than air and will settle on the floor.

WHAT TO DO IF YOU SMELL GAS

- Do not try to light any appliance.
- Do not touch any electric switch; do not use any phone in your building.
- Immediately call your gas supplier from a neighbor's phone. Follow the gas supplier's instructions.
- If you cannot reach your gas supplier, call the fire department.

C. Do not use this appliance if any part has been under water. Immediately call a qualified service technician to inspect the appliance and replace any part of the control system and any gas control which has been under water.

D. If the gas valve requires repair, call a qualified service technician. Force or attempted repair may result in a fire or explosion.

## OPERATING INSTRUCTIONS

1. Stop! Read the safety information above on this label.
2. Read the owner's manual including the section on "Remote Control" operation if applicable.
3. Turn off all electric power to the appliance.
4. This appliance is equipped with an ignition device which automatically lights the pilot. Do not try to light the pilot by hand.

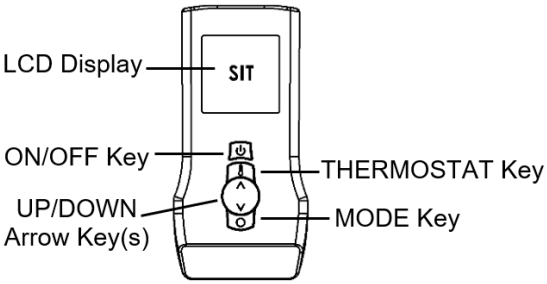


5. Wait five (5) minutes to clear out any gas. Then smell for gas, including near the floor. If you smell gas, STOP! Follow "B" in the safety information above this label. If you do not smell gas, go to next step.
6. Turn on all electric power to the fireplace.
7. Turn "On" Switch that operates the Main Burner. For **Remote Control** units, press the ON/OFF key on the remote control. "ON" will be displayed on the LCD display and a "beep" will be heard at the unit to indicate the command has been received.
8. If the appliance will not operate, follow the instructions "To Turn Off Gas To Appliance" and call your service technician or gas supplier.

## TO TURN OFF GAS TO APPLIANCE

1. Set thermostat to lowest setting. For **Remote Control** units, press the ON/OFF key on the remote control. "OFF" will be displayed on the LCD display and a "beep" will be heard at the unit to indicate the command has been received.
2. Turn off all electric power to the fireplace if service is to be performed.

# Proflame 2 –NE2 / LPE2 -IPI System Parts List-

| IPI PROFLAME 2 - COMPONENT PARTS | | |
|---|---|---|
| | PART NO. | DESCRIPTION |
| 1. | 1005-P001SI | Valve IPI Proflame PF2 885.001 NG - Stepper |
| 2. | 1005-P002SI | Valve IPI Proflame PF2 885.002 LP - Stepper |
| 3. | 1005-P325SI | Module IPI - Proflame 2 - 584.665 |
| 4. | 1005-P627SI | Module IPI – Proflame 2 - Basic - 584.627 (N/A) |
| 5. | 1005-P924SI | Harness PF2 - 584.924 |
| 6. | GTMFL | Transmitter- PF2 - 584.090 - WiFi Version |
| 6b. | 1005-P042SI | Transmitter- PF2 - 584.042 - Non-WiFi Version |
| 6c. | 1005-P080SI | Transmitter- PF2 - 584.080 - WiFi Version |
| For Replacement Transmitters, Replace with Same Part Number | | |
| 7. | 584-PWR-C | Wire Harness PF2 – Power Cord |
| 8. | 584-X4P | Terminal Block |
| 9. | 584-X10 | Wire Harness PF2 |
| 10. | 584-ACC01-C | Wire Harness PF2 - Fan/Light |
| 11. | 584-X8-B | Wire Harness PF2 - Optional Reset Harness |
| 12. | 584-X12 | Optional Power Vent Harness |

| IPI - PF1 and PF2 Common Components | | | |
|---|---|---|---|
| | PART NO. | DESCRIPTION | |
| 13. | 1002-P033SI | TC - Pilot Burner IPI (Assembled) NG 199.033 | |
| 14. | 1002-P047SI | TC - Pilot Burner IPI (Assembled) LP 199.047 | |
| 15. | 1001-P166SI | TC - Orifice Pilot NG 977.166 #62 (IPI) | |
| 16. | 1001-P168SI | TC - Orifice Pilot LP 977.168 #35 (IPI) | |
| 17. | 1001-P280SI | TC - Tubing W/Fittings 1/8 2.182.280 | |
| 18. | 1002-P012SI | IPI Stepper Kit - LP 907.012 | P2 CONVERSION |
| 19. | 1002-P013SI | IPI Stepper Kit - NG 907.013 | |
| 20. | 1002-P014SI | IPI Reg Kit - LP Hi-Lo 907.014 | P1 CONVERSION |
| 21. | 1002-P016SI | IPI Reg Kit - NG Hi-Lo 907.016 | |
| 22. | 1002-P017SI | TC - Electrode Cable & Sparker IPI 915.017 24" | |
| 23. | 1002-P119SI | TC - Electrode Cable & Sparker IPI 35" (Infinite, ZCVRB47, VRB46) | |
| 24. | 1002-P12BH | IPI Battery Housing 12bh347-Gr | |
| 25. | 1002-P903SI | TC - Electrode Flame Sense IPI 007.253/915.903 24" | |
| 26. | 1002-P910SI | TC - Electrode Flame Sense 35" (Infinite, ZCVRB47, VRB46) | |

**NOTE:** Fan and / or Light Options are not available on some fireplaces. **Check with your dealer.**

**NOTE:** When in Thermostat Mode, the fan has a 5-minute startup delay, and a 12-minute shutdown delay.

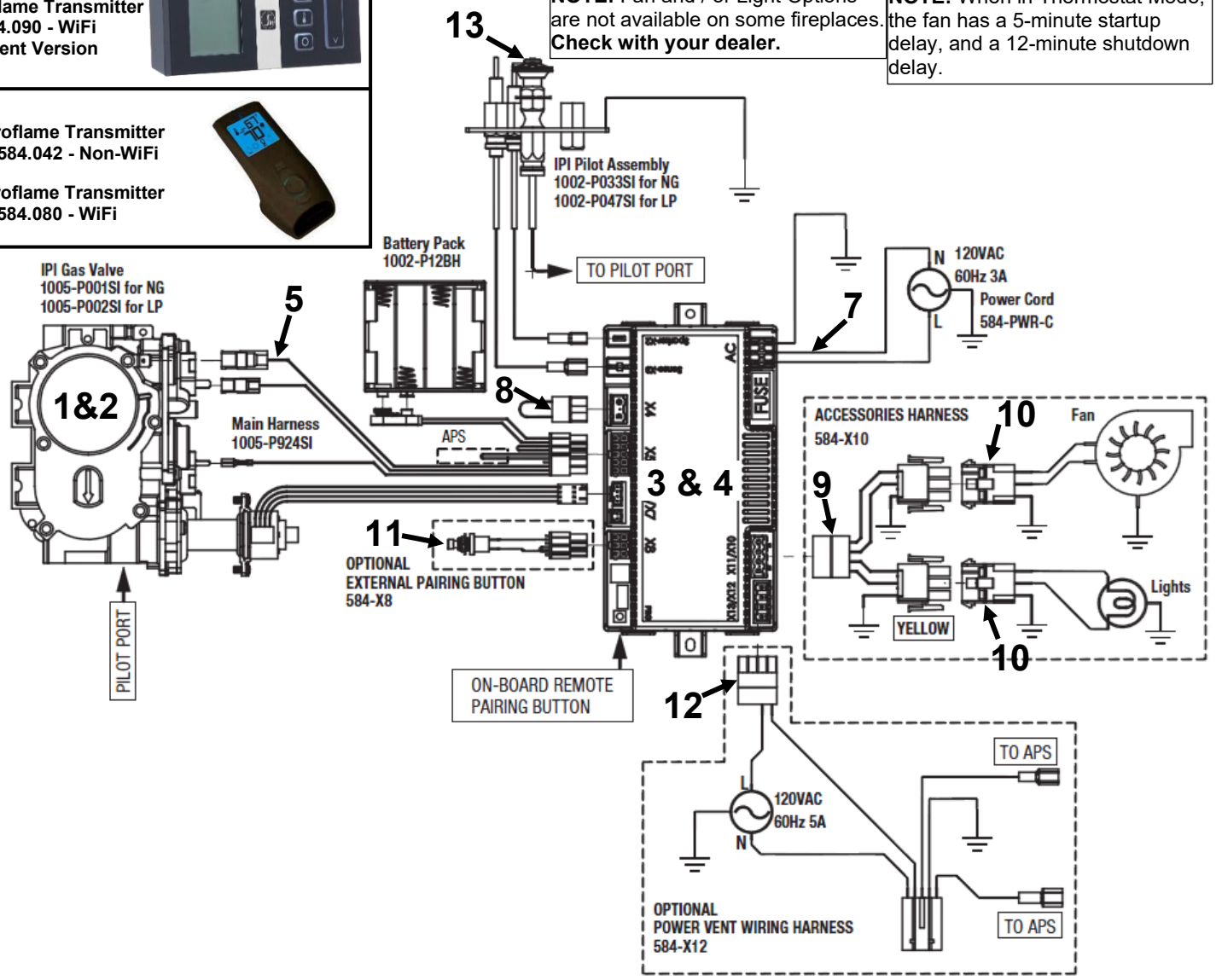

# Proflame 2 IPI - IFC Module and Remote Control

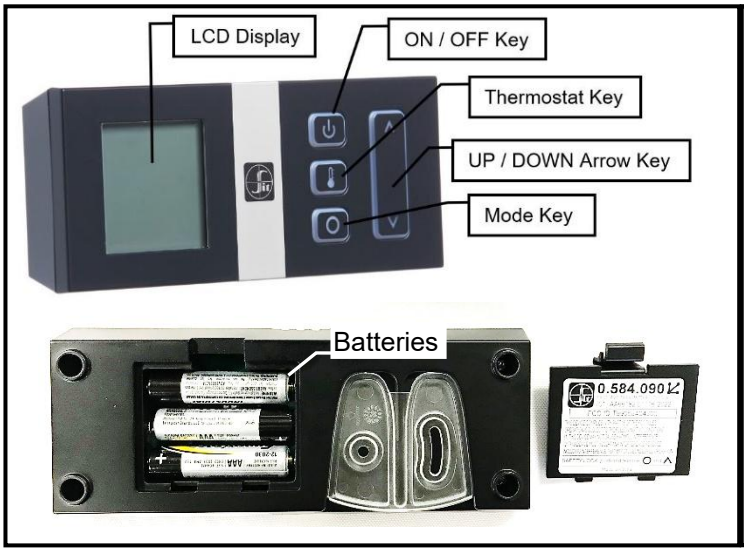


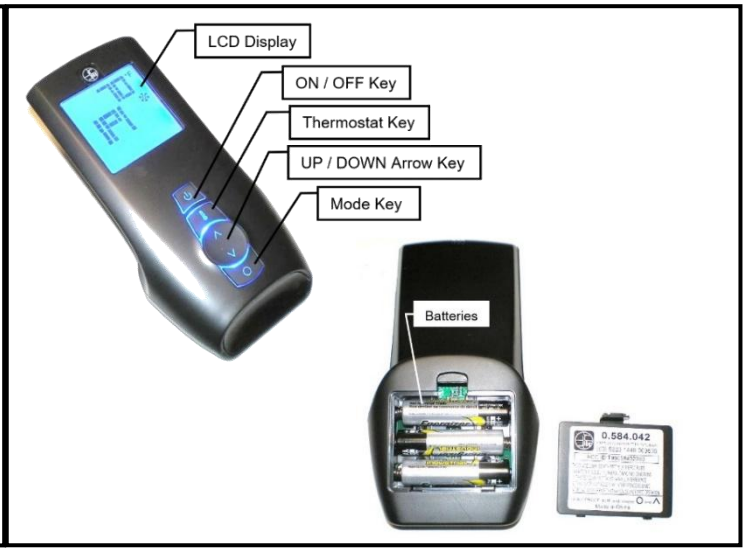


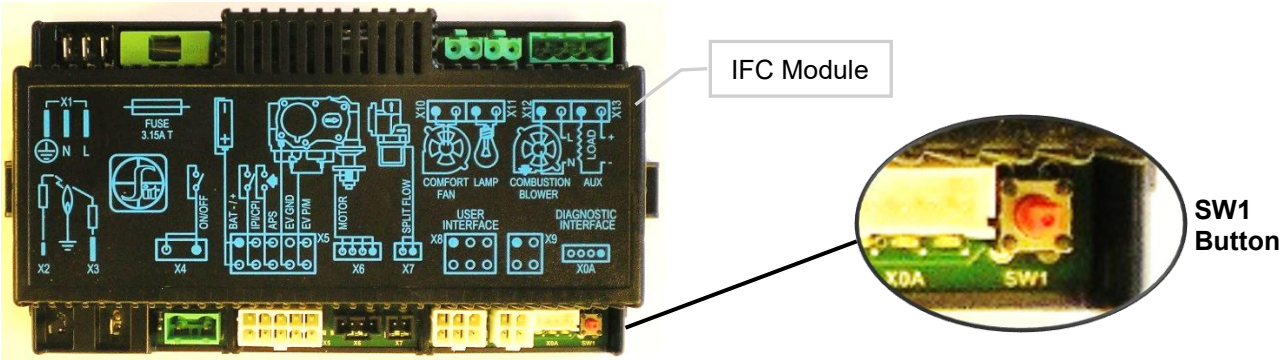


**Pairing Remote Control:**

- Install the 3 AAA type batteries in the battery bay, located on the base of the Remote Control. Note polarity of the batteries and insert them as indicated.
- Connect the AC power supply to the IFC Module.
- Press the SW1 button on the IFC Module so the IFC will “beep” and a red LED is illuminated to indicate that the IFC Module is ready to synchronize with a Remote Control within 10 seconds. With the batteries already installed in the Remote Control, push the ON button. The receiver will “beep” four times to indicate the Remote Control’s command is accepted.

The system is now initialized.

**Resetting Proflame 2 IFC Module for Manual Use**

If the transmitter gets misplaced, is broken, or is no longer wanted the PF2 Module can be reset to a manual system. A manual on/off switch or thermostat may be installed at the X4 connector (this connection is Jumped at the factory) no power is required.

**Note: the fireplace accessories (fan, lights) will retain the last settings they had before being reset to manual mode.**

The following sequence must be followed to reset the PF2 Module:

- Press the Red **SW1** button until you hear three beeps.
- Within 10 seconds press the **SW1** button again until you hear it beep.
- The PF2 Module may now be turned on/off manually (x4 connector) by a switch (not supplied), the pilot will remain on CPI (continuous pilot ignition) mode, all other functions of main burner, fan and lights will be on the high setting.

**Fan Startup and Shutdown Timings:**

Fan setting is started with a delay of 5 minutes from the fireplace ignition and stopped with a delay of 12 minutes from the fireplace switching off.

**Low Battery Power Detection**

When the Remote Control’s batteries are low, a Battery Icon will appear on the LCD display before all power is lost. When the batteries are replaced, this icon will disappear.

**Battery Backup**

The PF2 module is powered by line voltage (AC) with provision of battery backup in case of main power loss. Fans and lighting features will not function with the PF2 Module is powered by battery backup. It is recommended that the 4 x AA batteries are changed before each heating season.

**24 Hour Safety Shut Off**

If a transmission (user action) has not been detected by the receiver within 24 hours, the system will shut off as a safety feature.

## Cold Climates – CPI Setting - Proflame 2 Remote Control

**Use the CPI setting during cold weather,** otherwise the fireplace may have a hard time starting up and establishing a flame. The **CPI** (Continuous Pilot Ignition) setting will keep the firebox and fireplace exhaust vent warm during cold weather. When the firebox and exhaust vent are warm, exhaust gasses will readily flow out of the firebox.

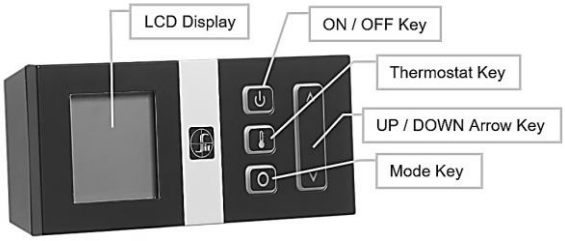

If the firebox and venting are too cold, there is resistance due to the heavy cushion of cold air, and combustion gasses may not rise into the exhaust vent, thus causing the fireplace to cycle or **Lockout** (if this happens see ***Lockout Reset Procedures*** below).

**NOTE:** The pilot system for this appliance may be equipped with a **Seven Day Timer**, in which case the pilot flame will be extinguished if the main burner has not been turned ON for seven days. This Seven Day Cycle is reset every time the main burner is cycled ON / OFF and the pilot remains lit. If more than seven days has passed since the main burner has been cycled ON / OFF and the pilot is also out, follow the procedures described in this manual to light the pilot.

## To switch from IPI to CPI Mode:

**1.** Turn the fireplace OFF using the **ON / OFF Key**.

**2.** Press the **Mode Key**. Display will appear as below.

**3.** Press UP on the **UP / DOWN Arrow Key**.
Display will show **CPI.**

The module in the fireplace will beep once to confirm command.

### TO RETURN TO IPI (INTERMITTENT PILOT) MODE:

Repeat steps one and two, and then press DOWN on the **UP / DOWN Arrow Key**.

The module in the fireplace will beep once to confirm command.

## Lockout Reset Procedures – Proflame 2

If the fireplace has cycled too many times in a short period of time, it will shut down and become unresponsive to any new command.

The LED light on the Proflame 2 module in the fireplace will be flashing red.

This condition is a **Lockout** state.

**Lockout Reset Procedure:**

1. Disconnect power from the Proflame 2 module in the fireplace for 10 seconds. This includes removing the backup batteries.
2. Once the 10 second interval has passed, reconnect power and reinstall backup batteries. The pilot should now try to light.
3. If the fireplace does not come on, call your fireplace technician.

### Remote-Flame Control

The proflame has six (6) flame levels. With the system on, and the flame level at the maximum in the appliance, pressing the Down Arrow Key once will reduce the flame height by one step until the flame is turned off.
The Up Arrow Key will increase the flame height each time it is pressed. If the Up Arrow Key is pressed while the system is on but the flame is off, the flame will come on in the high position. ( Fig. 7 & 8 ) A single "beep" will confirm reception of the command.

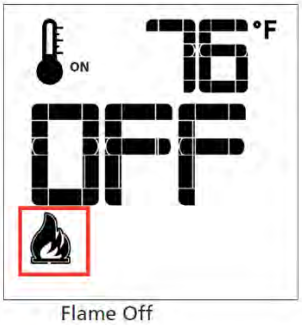


Fig. 7: Flame Off

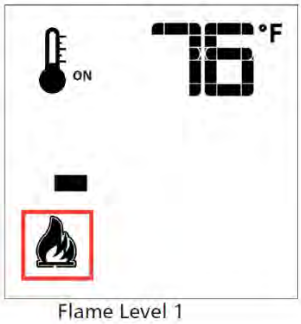


Flame Level 1

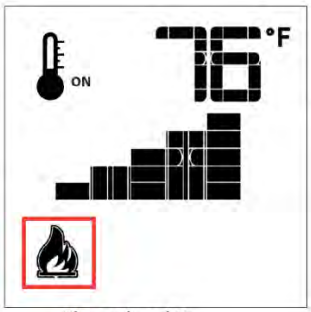


Fig. 8: Flame level 5

Flame Level Maximum

### Room Thermostat ( Transmitter Operation)

The Remote Control can operate as a room thermostat. The thermostat can be set to a desired temperature to control the comfort level in a room.
To activate this function, press the Thermostat Key (Fig. 1). The LCD display on the Transmitter will change to show that the room thermostat is "ON" and the set temperature is now displayed (Fig. 9). To adjust the set temperature, press the Up or Down Arrow Keys until the desired set temperature is displayed on the LCD screen of the Transmitter.

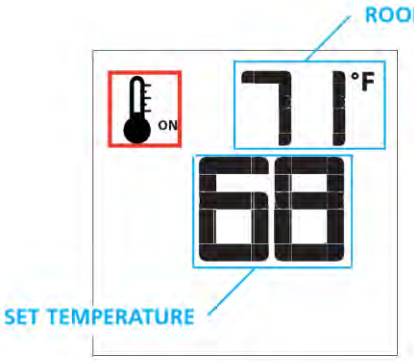


Fig. 9

Fig. 10

## Smart Thermostat (Transmitter Operation)

The Smart Thermostat function adjusts the flame height in accordance to the difference between the set point temperature and the actual room temperatures. As the room temperature gets closer to the set point the Smart Function will modulate the flame down.
To activate this function, press the Thermostat Key (Fig. 1) until the word "SMART" appears to the right of the temperature bulb graphic (Fig. 11).
To adjust the set temperature, press the Up or Down Arrow Keys until the desidered set temperature is displayed on the LCD screen of the Transmitter (Fig. 12).

Fig. 11: Smart flame function

Fig. 12

**Note:**
When Smart Thermostat is activated, manual flame height adjustment is disabled.

## Fan Speed Control

If the appliance is equipped with a hot air circulating fan, the speed of the fan can be controlled by the Proflame system. The fan speed can be adjusted through six (6) speeds. To activate this function use the Mode Key (fig.1) to index to the fan control icon (Fig. 13). Use the Up/Down Arrow Keys (Fig.1) to turn on, off or adjust the fan speed (fig. 14). A single "beep" will confirm reception of the command.

Fig. 13

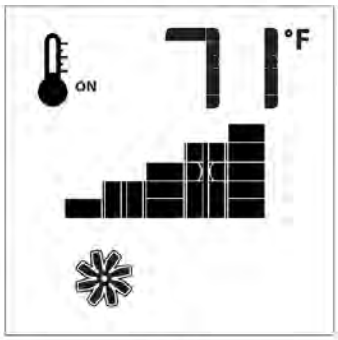


Fig. 14

## Remote dimmer control (Halogen lights only)

The auxiliary function controls the AUX power outlet by the dimmable light control. To activate this function use the Mode Key (fig. 1) to index to the AUX icon (fig. 15 & 16).
The intensity of the output can be adjusted through six (6) levels. Use the Up/Down Arrow Keys (Fig.1) adjust the output level (fig. 16). A single "beep" will confirm reception of the command.

**Note:**
This function is only available in Room Thermostat or Smart Thermostat Control Mode.

Fig. 15

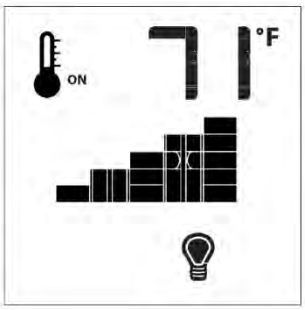


Fig. 16

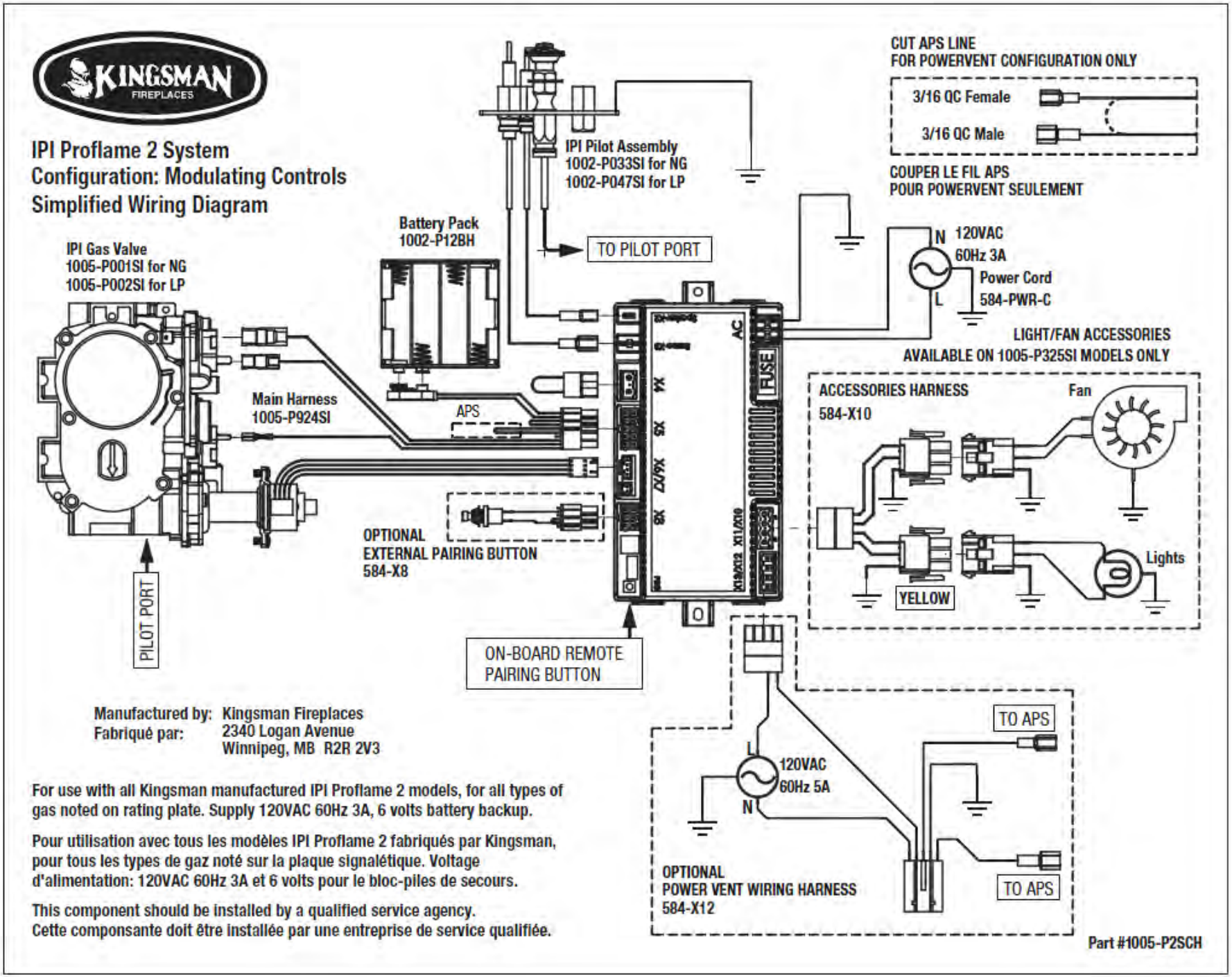
KINGSMAN
FIREPLACES
IPI Proflame 2 System
Configuration: Modulating Controls
Simplified Wiring Diagram
IPI Gas Valve
1005-P001SI for NG
1005-P002SI for LP
Battery Pack
1002-P12BH
IPI Pilot Assembly
1002-P033SI for NG
1002-P047SI for LP
TO PILOT PORT
CUT APS LINE
FOR POWERVENT CONFIGURATION ONLY
3/16 QC Female
3/16 QC Male
COUPER LE FIL APS
POUR POWERVENT SEULEMENT
N
120VAC
60Hz 3A
Power Cord
584-PWR-C
L
LIGHT/FAN ACCESSORIES
AVAILABLE ON 1005-P325SI MODELS ONLY
ACCESSORIES HARNESS
584-X10
Fan
Lights
YELLOW
Main Harness
1005-P924SI
APS
AC
FUSE
X4
X5
X6/X7
X8
X11/X10
X13/X12
OPTIONAL
EXTERNAL PAIRING BUTTON
584-X8
PILOT PORT
ON-BOARD REMOTE
PAIRING BUTTON
TO APS
L
120VAC
60Hz 5A
N
OPTIONAL
POWER VENT WIRING HARNESS
584-X12
TO APS
Manufactured by: Kingsman Fireplaces
Fabriqué par: 2340 Logan Avenue
Winnipeg, MB R2R 2V3
For use with all Kingsman manufactured IPI Proflame 2 models, for all types of gas noted on rating plate. Supply 120VAC 60Hz 3A, 6 volts battery backup.
Pour utilisation avec tous les modèles IPI Proflame 2 fabriqués par Kingsman, pour tous les types de gaz noté sur la plaque signalétique. Voltage d'alimentation: 120VAC 60Hz 3A et 6 volts pour le bloc-piles de secours.
This component should be installed by a qualified service agency.
Cette componsante doit être installée par une entreprise de service qualifiée.
Part #1005-P2SCH

## WMBH – Wall Mount Battery Holder – Proflame 1 and 2 IPI Models - Option

The WMBH provides the option for a more convenient and accessible location for the backup batteries.
**NOTE:** The WMBH is **NOT** a remote control receiver. It functions as a Battery Holder and mode selector switch **ONLY**.

**⚠ CAUTION- DO NOT PLUG THE ORIGINAL BATTERY HOLDER SUPPLIED WITH THE APPLIANCE INTO THE WMBH WIRING HARNESS. - NOT FOR USE WITH POWER VENTS -**

**Parts List:**
[1] Battery Holder
[1] DCHS Mount Bracket
[1] Wall Mount Cover Plate
[1] 16 ft. Wiring Harness

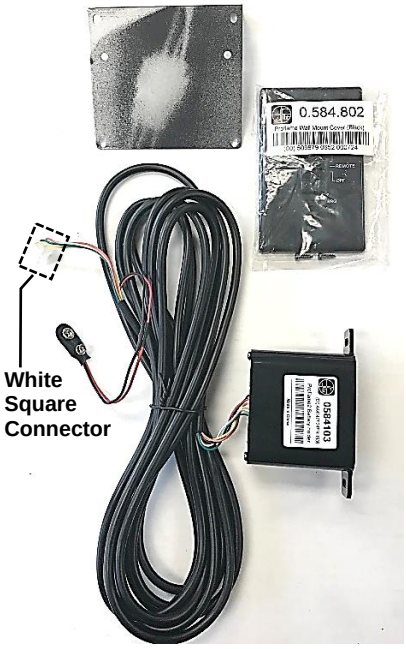


**Installation:**

- The Battery Holder can be mounted on a vertical wall stud using the DCHS as a mounting bracket.
- Ensure that the face is protruding 1/2” so that the face plate will be flush on the face of the wall.
- Drywall cutout size is 2” wide by 4-1/8” tall.
- Must be installed within 16ft of valve assembly (12ft recommended).

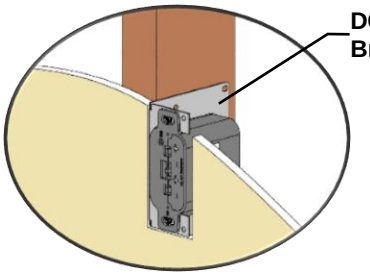

**Operating Instructions:**

- **Proflame 1:** Set the switch on the Battery Holder to either the **ON** or **REMOTE** position. The WMBH functions as a battery backup should a power outage occur.
- **Proflame 2:** Set the switch on the Battery Holder to the **REMOTE** position. **NOTE:** If the switch on the Battery Holder is set to **ON**, the remote control will be disabled. The WMBH functions as a battery backup should a power outage occur. Refer to the manual that accompanies the Battery Holder for further instructions.

**Proflame 1:**
-Plug **Battery Connector** into **Battery Holder** connection on wiring harness.

-The **Square Plug Connector** on the 16ft wiring harness is not used.

**Proflame 2:**
-Plug the **Square Plug Connector** into the **User Interface Socket** in the P2 Module.
-Plug the **Battery Connector** into **Battery Holder** connection on the Proflame 2 wiring harness.

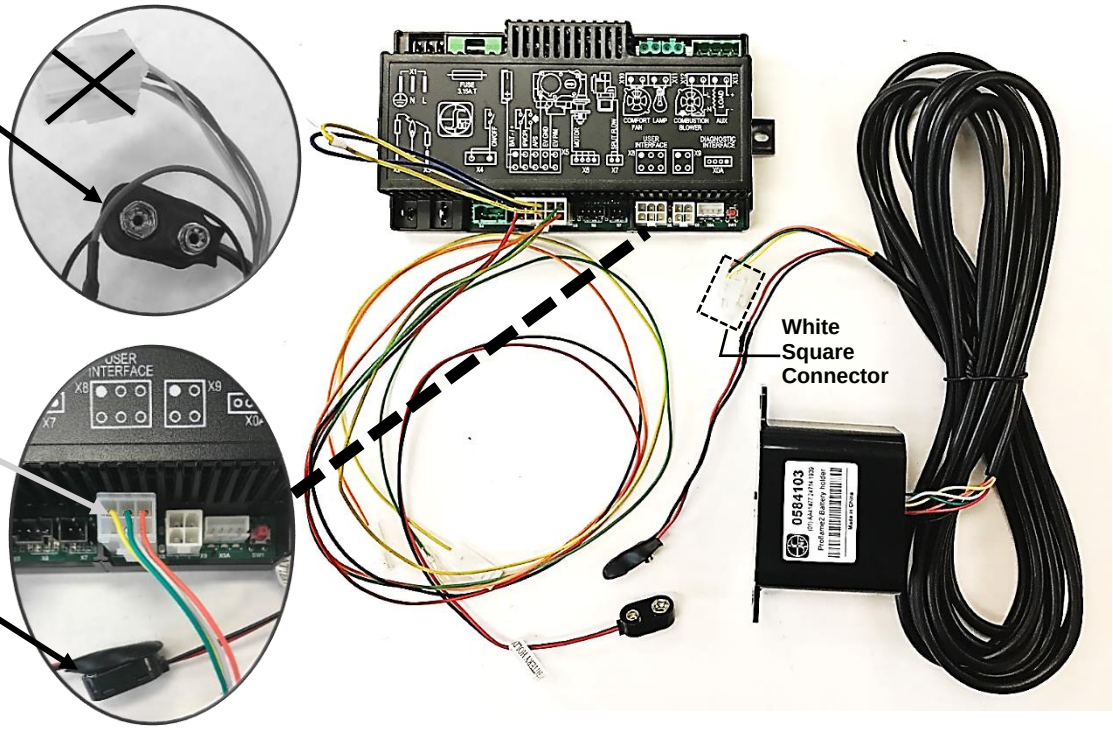

# Vent Terminal Clearances

**NOTE:** A HORIZONTAL VENT CERTIFIED GUARD (SAFETY CAGE) IS AVAILABLE WHEN REQUIRED BY LOCAL CODES.

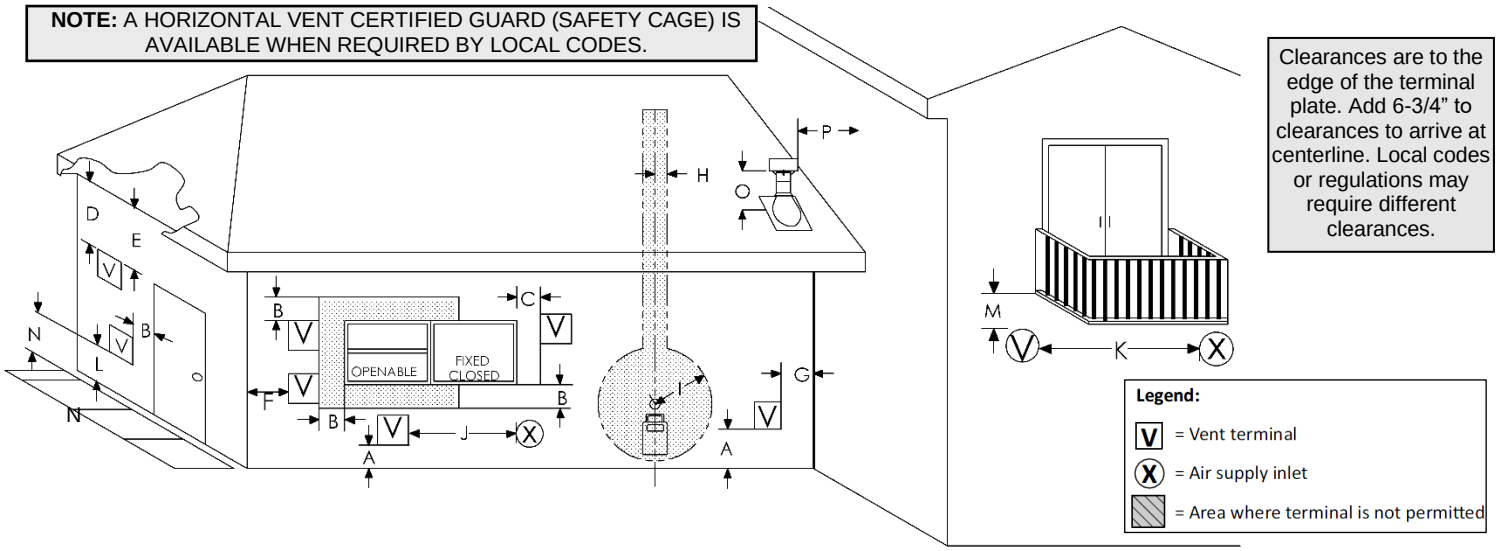


Clearances are to the edge of the terminal plate. Add 6-3/4" to clearances to arrive at centerline. Local codes or regulations may require different clearances.

| | | Canadian installations[1] | US installations[2] |
|---|---|---|---|
| **A** | Clearance above grade, veranda, porch, deck, or balcony | 12 in (30 cm) | 12 in (30 cm) |
| **B** | Clearance to window or door that may be opened | 6 in (15 cm) for appliances ≤ 10,000 Btu/h (3 kW), 12 in (30 cm) for appliances > 10,000 Btu/h (3 kW) and ≤ 100,000 Btu/h (30 kW), 36 in (91 cm) for appliances > 100,000 Btu/h (30 kW) | 6 in (15 cm) for appliances ≤ 10,000 Btu/h (3 kW), 9 in (23 cm) for appliances > 10,000 Btu/h (3 kW) and ≤ 50,000 Btu/h (15 kW), 12 in (30 cm) for appliances > 50,000 Btu/h (15 kW) |
| **C** | Clearance to permanently closed window | 12 inches (30cm) recommended to prevent condensation on window | 12 inches (30cm). 9 inches (23cm) for appliances 50,000 Btu's and lower |
| **D** | Vertical clearance to ventilated soffit located above the terminal within a horizontal distance of 2 feet (61 cm) from the center line of the terminal | 18 inches (46cm) | 18 inches (46cm) |
| **E** | Clearance to unventilated soffit | 12 inches (30cm) | 12 inches (30cm) |
| **F** | Clearance to outside corner | 3" * | 3" * |
| **G** | Clearance to inside corner | 3" * | 3" * |
| **H** | Clearance to each side of center line extended above meter/regulator assembly | 3 ft (91 cm) within a height 15 ft (4.5 m) above the meter/regulator assembly | 3 ft (91 cm) within a height 15 ft (4.5 m) above the meter/regulator assembly |
| **I** | Clearance to service regulator vent outlet | 3 ft (91 cm) | 3 ft (91 cm)* |
| **J** | Clearance to non-mechanical air supply inlet to building or the combustion air inlet to any other appliance | 6 in (15 cm) for appliances ≤ 10,000 Btu/h (3 kW), 12 in (30 cm) for appliances > 10,000 Btu/h (3 kW) and ≤ 100,000 Btu/h (30 kW), 36 in (91 cm) for appliances > 100,000 Btu/h (30 kW) | 6 in (15 cm) for appliances ≤ 10,000 Btu/h (3 kW), 9 in (23 cm) for appliances > 10,000 Btu/h (3 kW) and ≤ 50,000 Btu/h (15 kW), 12 in (30 cm) for appliances > 50,000 Btu/h (15 kW) |
| **K** | Clearance to a mechanical air supply inlet | 6 ft (1.83 m) | 3 ft (91 cm) above if within 10 ft (3 m) horizontally |
| **L** | Clearance above paved sidewalk or paved driveway located on public property | 7 ft (2.13 m) | *(Notes: 2) |
| **M** | Clearance under veranda, porch deck, or balcony | 12 in (30 cm)‡ | 12 in (30 cm) * |
| **N** | Where a vent termination may cause hazardous frost or ice accumulations on adjacent property surfaces | **(Notes: 1) | *(Notes: 2) |
| **O** | Clearance above highest point of exit on roof | 18 in (45cm) | 18 in (45cm) |
| **P** | Clearance to perpendicular or adjacent wall | 24 in (60cm) | 24 in (60cm) |

**Notes:**

1) In accordance with the current CSA B149.1, Natural Gas and Propane Installation Code.

2) In accordance with the current ANSI Z223.1/NFPA 54, National Fuel Gas Code.

***** Clearance in accordance with local installation codes and the requirements of the gas supplier.

****** A vent shall not terminate directly above a paved sidewalk or paved driveway that is located between two single family dwellings and serves both dwellings. Note: This does not apply to non-condensing appliances (Province of Ontario ONLY).

‡ Permitted only if veranda, porch, deck, or balcony is fully open on a minimum of two sides beneath the floor.

It is imperative that the vent termination be located observing the minimum clearances as shown. There must not be any obstruction such as bushes, garden sheds, fences, decks or utility buildings within 24" from the front of the termination plate.

Do not locate termination where excessive snow or ice build-up may occur. Be sure to check vent termination area after snow falls and clear to prevent accidental blockage of venting system. When using snow blowers, make sure snow is not directed towards vent termination area.

Venting terminal shall not be recessed into a wall or siding. If finishing the outside wall with vinyl or wood siding it is **required** that a Siding Shield be installed, Part Number ZDVSSLR.

# General Vent Installation Information

⚠ **WARNING:** DO NOT mix parts from different systems unless stated in the manual.

This gas appliance is approved to be vented either through the side wall or vertically through the roof. Only Kingsman Flex (Z-Flex) Venting Kits and components specifically approved and LABELED for this appliance may be used. This appliance is also approved for use with 5 x 8 MG-Duravent Direct Vent system (DirectVent Pro and DirectVent Pro Concentric Flex), BDM Pro Form Direct Vent, Ameri-Vent Direct Vent Pipe System, ICC Excel Direct, Metal Fab Sure-Seal DV and Selkirk Direct Temp.

## Rigid or Hard Pipe

When using 5 x 8 MG-Duravent, Ameri-Vent pipe, BDM Pro Form Direct Vent, ICC Excel Direct, Metal Fab Sure-Seal DV and or Selkirk Direct Temp, 5 x 8 MG Duravent hard pipe, Adapter # Z58DFA must be used on units with a sloped flue. Follow installation instructions provided by MG-Duravent/Ameri-Vent/Selkirk Direct Temp, ICC Excel Direct, and Metal Fab Sure-Seal DV for installation of pipe and adhere to the clearance to combustibles provided in this manual. A starter piece of MG Duravent 5/8” will be required when using ICC Pipe on Enclave or Serene models.

**Apply a bead of Mill Pac high temp sealant at the flue of the appliance when using a Duravent adapter.**

**NOTE:** It is critical to the proper and safe operation of this fireplace that on all connections the inner liner and the outer casing are both caulked with liberal amounts of sealant. Do not use any kind of tape or silicone other than that recommended in this manual. Use Mill Pac Sealant.

**NOTE:** These actions are essential for proper resealing or reinstallation of the vent-air intake system.

**REMEMBER THAT A 1/4" VERTICAL RISE IS REQUIRED FOR EVERY 12" OF HORIZONTAL RUN**.

## Flex Pipe Venting

Kingsman Flex pipe is shipped in unexpanded length. When installing pipe expand the lengths. Pipe can be expanded to twice their lengths e.g., 4ft to 8ft. Fully expand pipe and cut off excess.

Do not use more than 2 couplers **(Order ZDV5FC & ZDV8FC – DO NOT fabricate couplers)** to extend short pipes. Single sections are preferred in an installation attaching at the fireplace and termination.

Place the spring spaces provided approximately every two feet to stabilize 5” flex in the center of 8” flex. When forming bends place spring in bend or before and after. (See Fig. 1). Horizontal runs require support metal straps every 2 feet. In offset installation support straps should be used to stabilize pipe.

Expand 5” and 8” flex pipe to the point that the 8” protrudes approximately 2 to 3 inches past outer wall and the 5” flex protrudes approximately 2 to 3 inches past the 8” flex. (See Fig. 1). Attach the 5” pipe to the termination first and secure with sealant and screws then attach the 8” flex to the termination with caulking and screws. Termination may then be moved back to the outer wall and attached to home screwing into the framing. Silicone around termination to waterproof. If siding shield is going to be used attach this using same attaching hole as the top of termination after termination has been caulked for water proofing.

### Use Hi Temp Sealant

Apply a bead of Mill Pac high temp sealant to all joints and use four screws to secure each pipe at fireplace, termination and any joint if joining any sections of pipe.

### Preventing Moisture Problems

Insulate wall thimbles and attic insulation shields for vertical attic terminations with non-combustible mineral wool Insulation (Roxul, Rockwool, Thermafiber UltraBatt, etc.). Attach and seal the outer perimeter of the wall thimble or attic insulation shield to the existing vapor barrier.

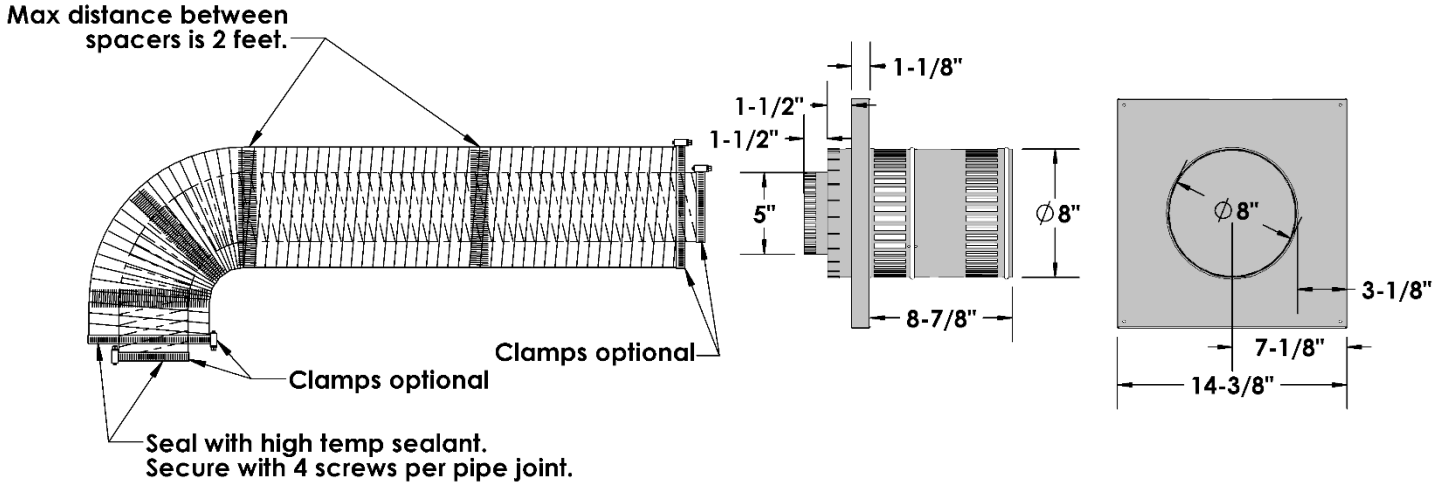

# Installation of Side Wall Venting

1. To determine the minimum distance from the bottom of fireplace to center of vent see the Framing Your Gas Fireplace section. Cut a hole through the wall allowing for a 12” x 12” (inside diameter) in combustible walls for wall thimble or a 9” diameter hole in a non-combustible wall (See Figure 2).
2. For the clearance to combustible above a 90-degree bend see Clearance to Combustibles section.
3. Select the approximate vent length, precise measurements are not needed as your flex pipe can be expanded to twice its shipped length for ease of installation.
4. To install wall thimble center over 12” x 12” (inch) framing from both sides of wall and secure. Route flex vent pipe through wall thimble (See Figure 1).
5. Before joining pipes, apply a bead of high temperature sealant (Mill Pac) to end of pipe. First attach the five-inch (5”) flue pipe to the vent termination with sealant, and secure with the four screws provided. At this time make sure the spacer springs are attached to the (5”) flex pipe as required. Then attach the eight-inch (8”) pipe by the same method.
6. Mount vent termination and seal to wall using caulking around the wall thimble to weather proof. After installing the vent termination, double check to make sure the pipe extends properly through wall thimble and into vent termination.
7. Before joining pipes to fireplace flue, apply a bead of high temperature sealant (Mill Pac) to end of pipe. First attach the five-inch (5”) flue pipe to fireplace with sealant, and secure with the four screws provided. At this time verify that the spacer springs are attached properly to the (5”) flex pipe as required. Then attach the eight-inch (8”) pipe by the same method.
8. Support horizontal pipes every two (2) feet (61 cm) with metal strap bands. Re-check fireplace to make sure it is levelled and properly positioned and secured.
9. Support vertical pipes to maintain a minimum of 1” or greater clearance to combustibles with metal strapping bands.
10. If finishing the outside wall with vinyl or wood siding it is **required** that a Siding Shield be installed, Part Number ZDVSSLR.

**Note: Vent Termination must not be recessed into wall or siding.**

**WARNING:** A HORIZONTAL VENT CERTIFIED GUARD (SAFETY CAGE) IS AVAILABLE WHEN REQUIRED BY LOCAL CODES.

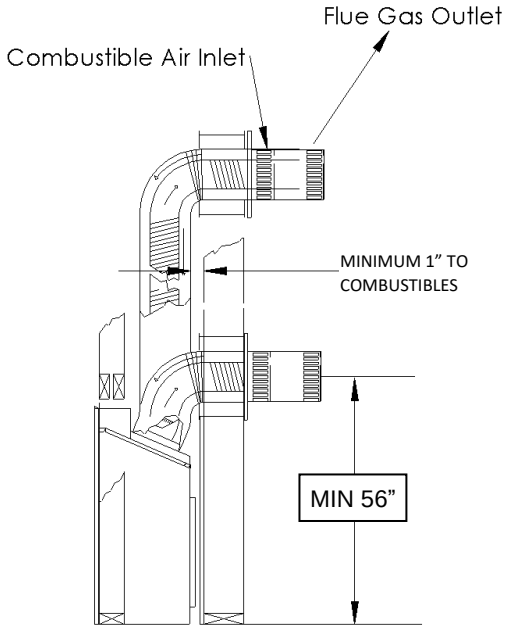


**Figure 1**

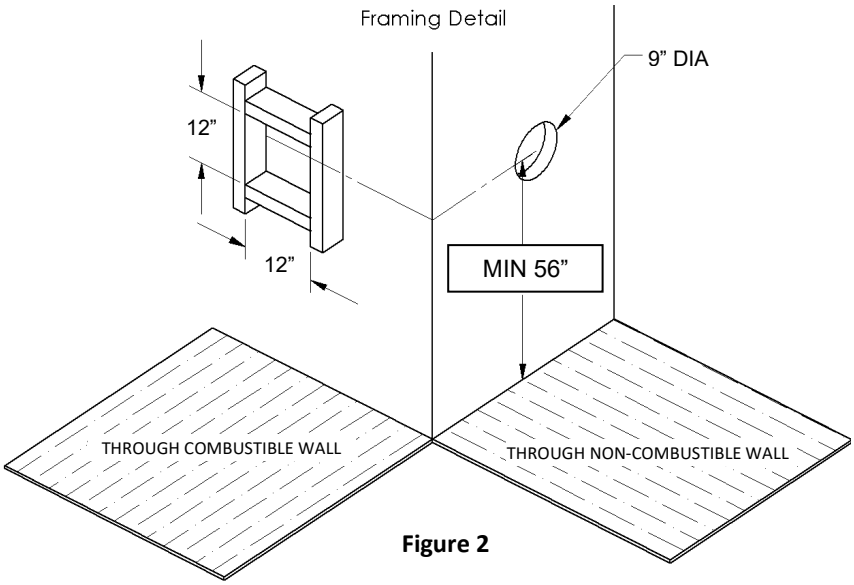


**Figure 2**

## Venting Routes and Components

Since it is very important that the vent system maintain its balance between the combustion air intake and the flue gas exhaust, certain limitations as to vent configurations apply and must be strictly adhered to.

The table showing the relationship between vertical and horizontal side wall venting will help to determine the various vent lengths.

The maximum horizontal run is 20ft (6.1m) when the vertical rise is 8 ft (2.4m). See **Example A** below.

**Note: 1/4" vertical rise is required for every 12" of horizontal run.**

The maximum number of 45° bends per side wall installation is four (4) in the horizontal run. You must reduce the length of the horizontal by 18" (45cm) for each 45° bend.

The maximum vertical run is 43ft (13.1m).

**Special Note:** For each 45° bend installed in the horizontal run, the length of the horizontal run must be reduced by 18" (45cm). This does not apply if the 45° bends are installed on the vertical part of the vent system. **Example:** If according to the table, the length of the horizontal run is 10ft (3m), and two 45° bends are required, the horizontal run length must be reduced to 8ft (2.4m).

Two (2) additional 90° bends (or the equivalent) are allowed. The horizontal run must be reduced by 36" (90cm) for each 90° bend, or 18" (45cm) per each 45° bend.

**IMPORTANT:**
Always locate the fireplace in such a way that a minimum of offsets and/or horizontal runs are required. For every 12" (30cm) horizontal run, 1/4" (6mm) vertical rise is required.

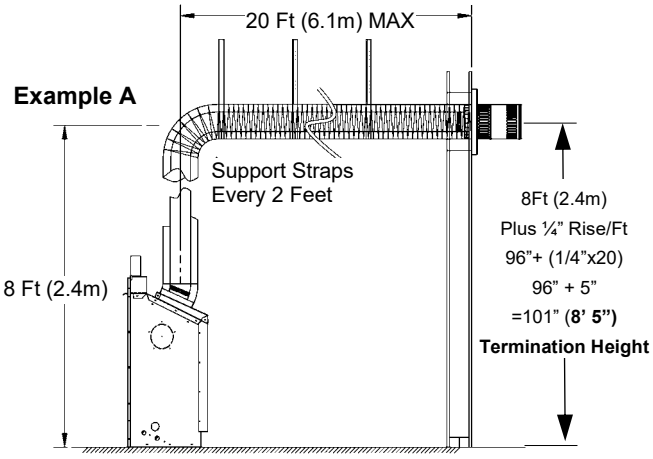


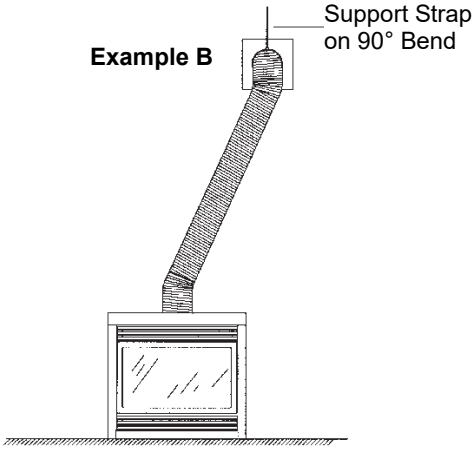


### How to Use the Horizontal Vent Table

1. Determine the height of the system and the number of bends required.
2. Having determined the vertical distance determine the maximum horizontal section allowed.
3. Vent table has been established for 90˚ horizontal/vertical runs. Flex pipe runs not having 90˚ bends will not fall into vent table standards. See **Example B** below.

**Horizontal Venting Table from Bottom of Fireplace**

For venting to a maximum of 43ft (13.1 meters)

| Total Vertical | | Max Total Horizontal | |
|---|---|---|---|
| **Feet** | **Meters** | **Feet** | **Meters** |
| (56" Min) | 1.42 | 4 | 1.2 |
| 6 | 1.8 | 6 | 1.8 |
| 7 | 2.1 | 20 | 6.1 |
| 8 | 2.4 | 20 | 6.1 |
| 9 | 2.75 | 20 | 6.1 |
| 10 | 3.0 | 20 | 6.1 |
| 11 | 3.4 | 20 | 6.1 |
| 12 | 3.7 | 20 | 6.1 |
| 13 | 4.0 | 20 | 6.1 |
| 14 | 4.3 | 20 | 6.1 |
| 15 | 4.6 | 20 | 6.1 |
| 20 | 6.1 | 20 | 6.1 |
| 25 | 7.6 | 15 | 4.6 |
| 30 | 9.1 | 10 | 3.0 |
| 43 (Max) | 13.1 | 0 | 0 |
| 43 (Max) | 13.1 | 4 | 1.22 |

**NOTE:** A length of horizontal vent run ***less*** than the maximum is acceptable (such as up and out) provided that clearances to combustibles are maintained and proper procedures are followed.

**NOTE:** The final location of the fireplace must be such that the horizontal vent dimensions fall within those stated in the Horizontal Venting Table. The Maximum Vertical vent run is 43ft (13.1m).

**IMPORTANT:**
Minimum clearance between vertical vent pipes and combustible materials is1" (25mm).

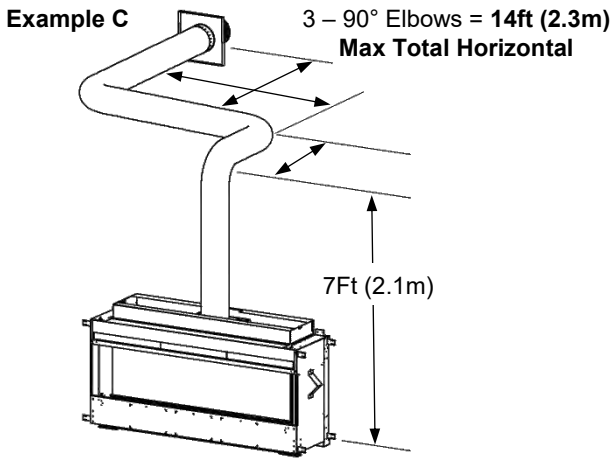

# Venting Straight Up Through Roof

An Attic Insulation Shield must be installed where the vent passes from a lower living space into an attic space where the chimney is not enclosed. It is designed to keep insulation materials away from the chimney.
When installing the Attic Insulation Shield where the chimney passes from a living space to an attic space, install the shield from below and nail in place using 1" spiral nails.
A fire stop must be installed on the bottom side of the joists when passing through a ceiling or floor. If an attic insulation shield is to be used, a fire stop is not required.

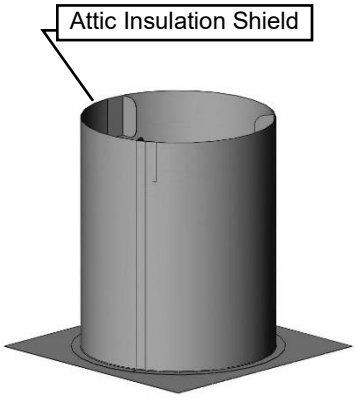


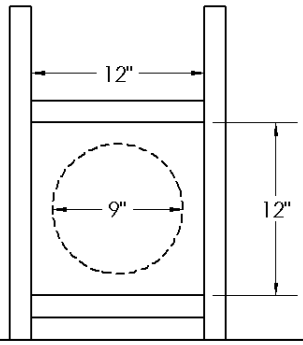


**Vertical Vent Framing**
**9" Round Hole** through Masonry.
**12" x 12" Framing** for Combustible.

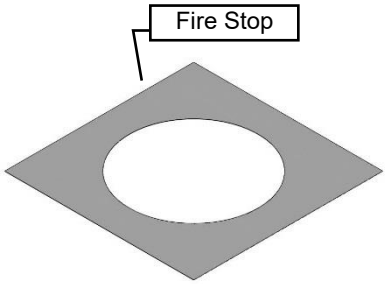


## Using Flex Bends

Avoid cutting joists by offsetting the flex pipe.
When using 45° bends a bend support is required directly above the highest bend.
When installing a bend in a joist area a minimum of 4" clearance to combustible to the top of bend must be maintained, sides and bottom of pipe, a 1" clearance to combustibles must be maintained. If running horizontal through an area a 1-1/2" minimum clearance to the top of the horizontal pipe must be maintained.
Maximum vertical height of system should not exceed 43 feet.
Use roof support and rigid pipe at roof level. Flex pipe is not permitted within roof support.
When penetrating the roof a rigid galvanized pipe must be used. Attach flex pipe to the rigid pipe with high temperature sealant, secure with four screws assuring the flex pipe and rigid pipe are secured. Attach rigid pipe to termination with sealant and screw with 4 sheet metal screws. The Inner flex pipe must be secured with 4 screws which must penetrate both the flex pipe and inner section of termination. Attach 8" rigid pipe to 8" termination with sealant and screw with 4 sheet metal screws.
Vertical termination clearance is 18" [45.7cm] above the roof, measured from highest point of exit on the roof line.
Support vertical pipes to maintain minimum of one inch or greater clearances to combustibles.

## Roof Flashing

Ensure that you have the proper roof flashing by checking your roof pitch using a level and two rulers, or by using a roof pitch card. Slide a Roof Flashing suitable to your roof slope over the vent. Place the edge of the flashing plate that will be on the higher part of the roof slope under the shingles. Both the sides and the lower edge lay on top of the shingles.

**NOTE: At the top edge of the flashing plate, lift the shingles and nail the plate to the roof deck, then cement the shingles to the plate with a suitable waterproof mastic.**

Ensure that the chimney is plumb. Square up the flashing plate and nail in place to the roof deck. Use 12 nails with neoprene washers or cover the heads with a suitable waterproof mastic. Wrap the storm collar around the vent above the flashing. Secure the ends together loosely with nut and bolt supplied. Slide the collar down the vent until it comes in contact with the flashing. Tighten the bolt and seal the Storm Collar to the vent with a suitable waterproof non-combustible mastic.
The flashing and storm collar should be painted to match the roof shingles. This will extend its life and improve the appearance. Clean, prime and paint with suitable painting products.

## Vertical Venting in Cold Climates

In cold climate conditions where temperatures go below -10 degrees Celsius or 14 degrees Fahrenheit, we recommend that the chase be insulated and where the vent pipe enters into the attic space that the pipe be wrapped with an insulated Mylar sleeve. This will increase the temperature of the vent and help the appliance to vent properly in cold weather conditions.
It is also important in vertical vented direct vent appliances that the appliance be operated daily during the winter months as this will help stop the termination from freezing up.

We recommend using a thermostat set at room temperature to allow the unit to cycle.
For IPI models it may be necessary to set the appliance to Standing Pilot mode to maintain heat in the cavity. The purpose of this procedure is to prevent cold air from penetrating the chimney and then onto the living space. Therefore, when the internal temperature is slightly elevated the fireplace is able to freely exhaust its combustion and hence making it easier to start up.

**-ALSO SEE DIAGRAMS ON FOLLOWING PAGE-**

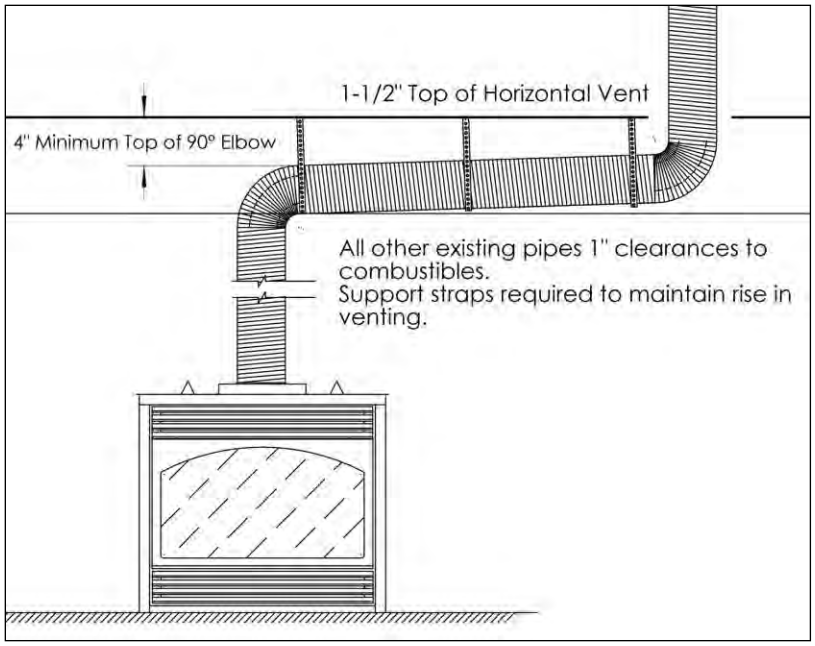


Clearances in horizontal venting.

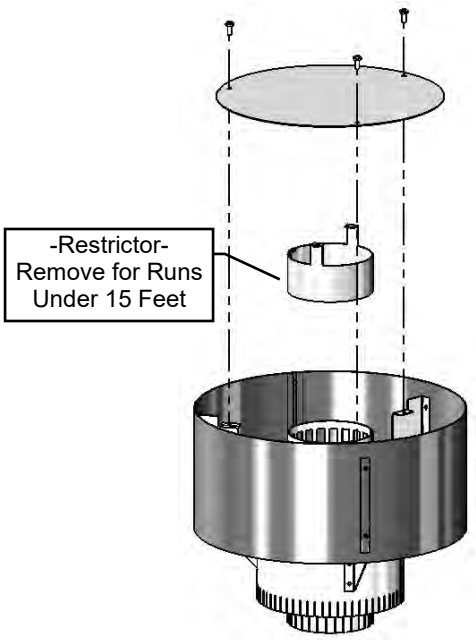


**Z58VT**

Clearance to perpendicular wall 24 inches (60 cm). (Recommended to prevent re-circulation of exhaust products. For additional requirements check local codes.)

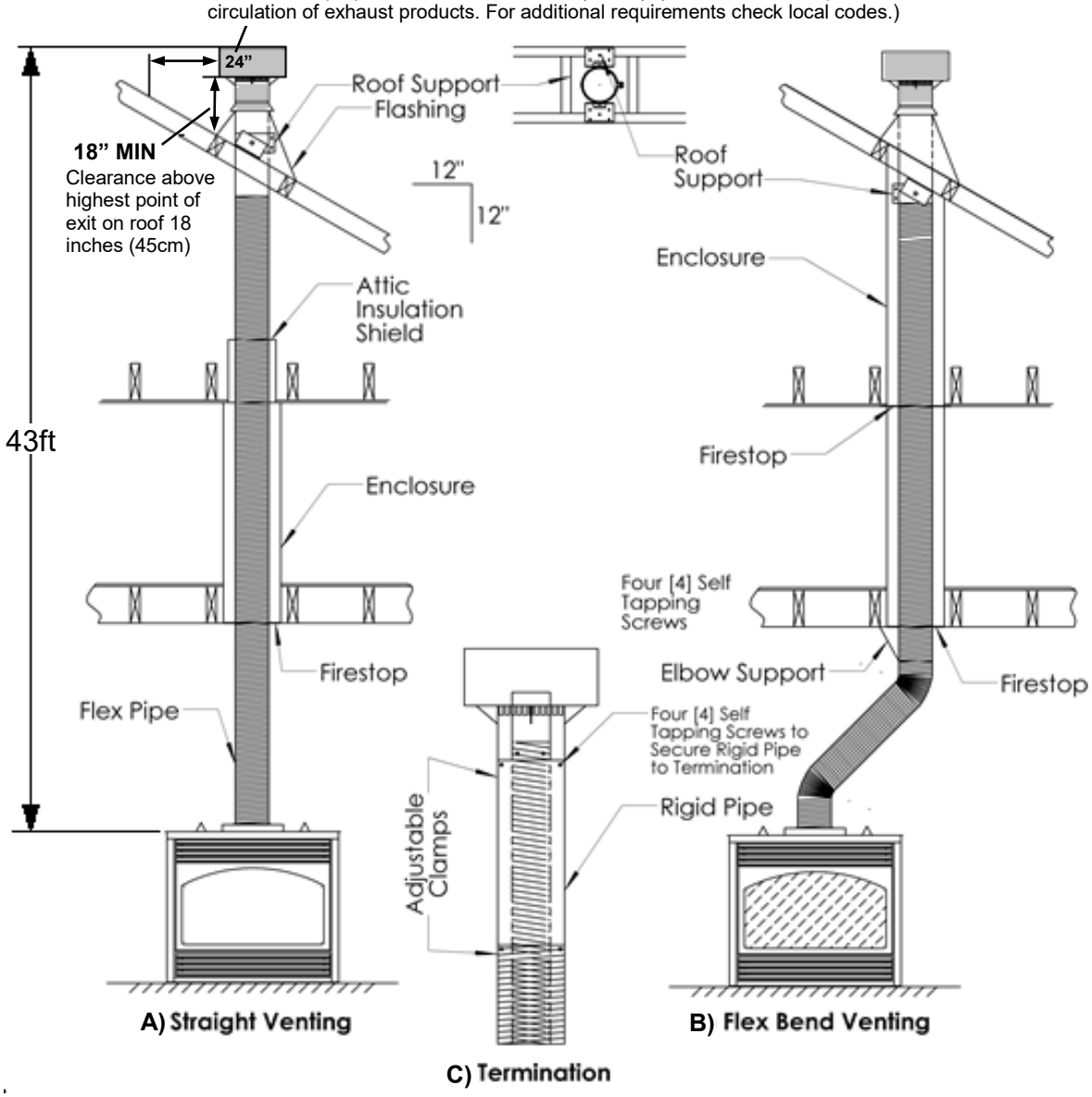


**A)** Straight-through roof support configuration; **B)** Flex bend configuration; **C)** Termination mounting

## ZCVRB60 Air Intake Adjustment Plate - Vertical Venting and Power Venting

**Must be Adjusted Before any Medium Base is added.**

The Air Intake Adjustment Plate must be set at the correct position for the fireplace to function properly.

**Location-** The Air Intake Adjustment Plate is located at the back of the Firebox underneath the False Bottom.

**Access-** To access the Air Intake Adjustment Plate, Remove the DT Screws from the False Bottom and remove it. Refer to *Burner System Removal / Installation* in the manual.

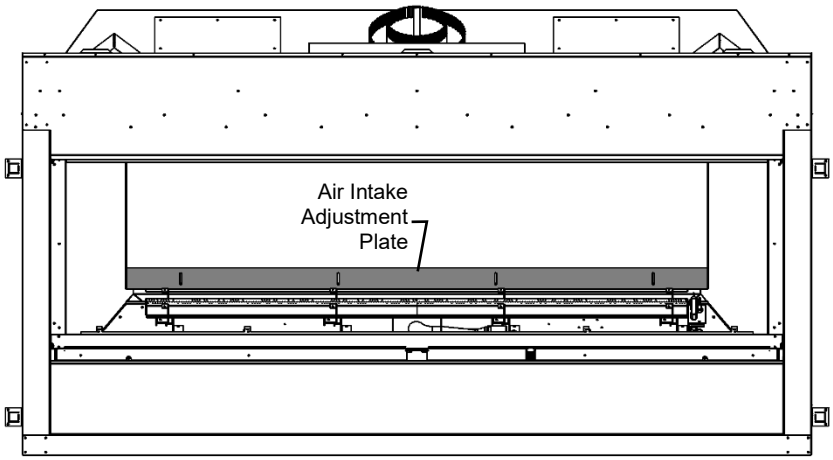


The Air Intake Adjustment Plate is set in the **Top Position** position at the factory.

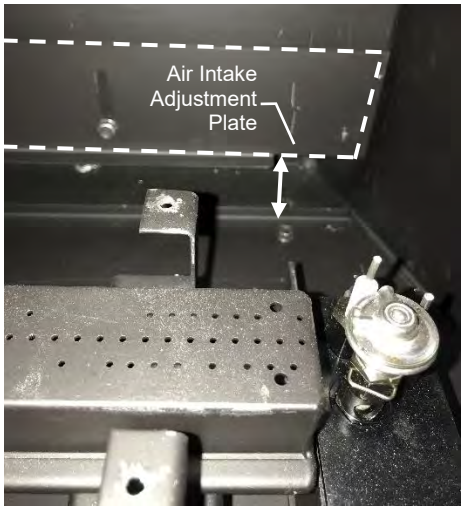


**Picture #1**
**Top Position (Factory Setting)**

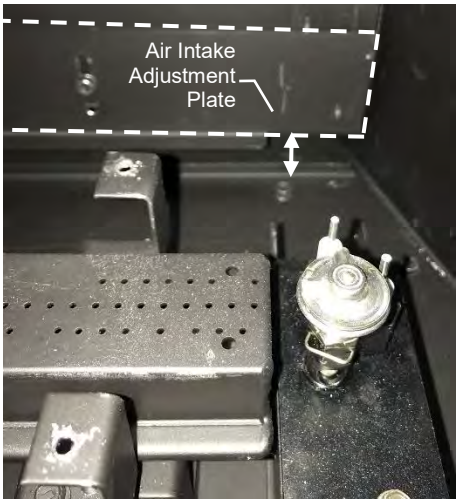


**Picture #2**
**Middle Position**

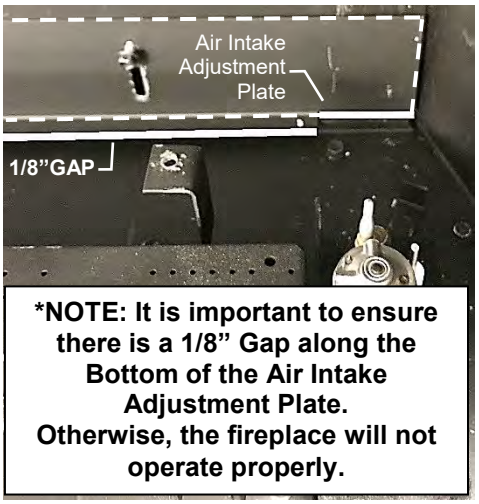


***NOTE: It is important to ensure there is a 1/8" Gap along the Bottom of the Air Intake Adjustment Plate. Otherwise, the fireplace will not operate properly.**

**Picture #3**
**Bottom Position (1/8" Gap)***

For Vertical Runs **Less than 10 Feet – See Picture #1 -** Top Position (Factory Setting)

For Vertical Vent **Runs 10 Feet Long** – **See Picture #2** - Middle Position

For Vertical Vent **Runs 15 Feet Long or more – See Picture #3** - Bottom Position (1/8" Gap)*

For Power Vent Runs **Less than 25 Feet – See Picture #2** - Middle Position

Any further adjustments are to be made with Power Vent Controls

For Power Vent Runs **More than 25 Feet – See Picture #1 –** Top Position (Factory Setting)

Any further adjustments are to be made with Power Vent Controls

## -Glass Safety- All Units

**IT IS THE RESPONSIBILITY OF THE HOME OWNER TO ENSURE THAT NO ONE TOUCHES A HOT APPLIANCE.**

If the barrier becomes damaged, the barrier shall be replaced with the manufacturer's barrier for this appliance.

Any safety screen, guard, or barrier removed for servicing the appliance, must be replaced prior to operating the appliance.

**DANGER**

**HOT GLASS** WILL CAUSE BURNS.

**DO NOT TOUCH** GLASS UNTIL COOLED.

**NEVER** ALLOW CHILDREN TO TOUCH GLASS.

A barrier designed to reduce the risk of burns from the hot viewing glass is provided with this appliance and must be installed for the protection of children and other at-risk individuals.

If the barrier becomes damaged, the barrier must be replaced with the manufacturer's barrier for this appliance.

- Children and adults should be alerted to the hazards of the high surface temperatures of this appliance and should stay away to avoid burns or ignition of clothing.
- Do not clean when the glass is hot.
- Young children should be carefully supervised when they are in the same room as the appliance. Toddlers, young children and others may be susceptible to accidental contact burns.
- A physical barrier is recommended if there are at risk individuals in the house. To restrict access to a fireplace or stove, install an adjustable safety gate to keep toddlers, young children and other at risk individuals out of the room and away from hot surfaces.
- Do not leave the fireplace remote control where it is accessible to children.

## -Termination Cap Safety- All Units

**WARNING:**

**A HORIZONTAL VENT CERTIFIED GUARD (SAFETY CAGE) IS AVAILABLE WHEN REQUIRED BY LOCAL CODES.**

**SAFETY CAGES ARE AVAILABLE FOR ALL HORIZONTAL VENT TERMINATIONS. CHECK WITH YOUR DEALER.**

- **TERMINATION CAP IS HOT!** Do not place flammable materials on or within 24 inches of termination caps.
- It is imperative that the vent termination be located observing the minimum clearances as shown in manual.
- There must not be any obstruction such as bushes, garden sheds, fences, decks or utility buildings within 24" from the front of the termination plate.
- Do not locate termination where excessive snow or ice build-up may occur. Be sure to check vent termination area after snow falls and clear to prevent accidental blockage of venting system. When using snow blowers, make sure snow is not directed towards vent termination area.
- Venting terminal shall not be recessed into a wall or siding.

## Approved for Power Vent PVH58 / PVH58FM

**- This appliance is approved for use with Kingsman Horizontal Power Vents -**

A Horizontal Power Vent Termination is intended for use where standard venting configurations are not possible.

- **NOTE:** MODELS EQUIPPPED WITH MILLIVOLT/ STANDING PILOT IGNITION: Downward vertical vent runs are **NOT** permitted.
- **NOTE:** MODELS EQUIPPPED WITH INTERMITTENT PILOT IGNITION (Proflame 1 or Proflame 2): Downward vertical vent runs are permitted, however, Cold Climate Switch (Standing Pilot Mode) must **NOT** be used.

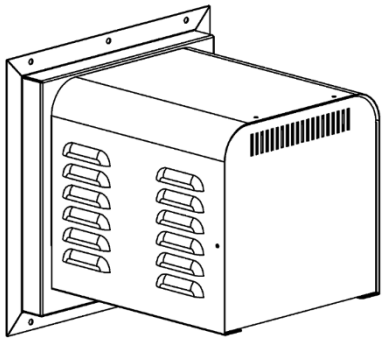

**PVH58**

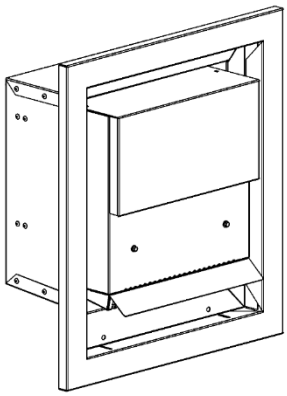

**PVH58FM**

| **ENCLAVE & SERENE Units - Maximum & Minimum Vent Lengths using Power Vents:** | **<u>ENCLAVE & SERENE Units</u> – Can be Reduced to 3 x 5" Venting (including MG Duravent CVS 3/5" Vent System), or 4 x 6-5/8" Venting. Note:** A 12 Inch Length of 5/8 M&G Duravent Pipe Must be Connected to Fireplace Flue First. | |
|---|---|---|
| • **Minimum Vent Length** is 4 FT vertical x 6 FT horizontal with up to 5 elbows.<br>• Maximum Vent Length is 4FT vertical x 125FT horizontal with up to 7 elbows.<br>• Refer to Power Vent Manual for proper installation and use. | **3 x 5" Venting:**<br>-**PVA5835**- Pipe Reducer for Fireplace<br>-**PVA3558**- Pipe Increaser for Termination | **4 x 6-5/8" Venting:**<br>-**ZDVDRA**- Pipe Reducer for Fireplace<br>-**ZDVDIA**- Pipe Increaser for Termination |

**<u>At Fireplace Flue:</u>**

**PVA5835 for 3 x 5" Venting**

**ZDVDRA for 4 x 6-5/8" Venting**

**<u>For Power Vent Termination:</u>**

**PVA3558 for 3 x 5" Venting**

**ZDVDIA for 4 x 6-5/8" Venting**

## Power Vent Parts List – 5/8 Venting

| NUMBER | DESCRIPTION |
|---|---|
| PVH58 | Horizontal Power Vent Starter Kit - Exterior Mount |
| PVH58FM | Horizontal Power Vent Kit - Flush Mount |

**Note:** Must use a one foot section of 5/8 DV hard pipe to connect to the Power Vent Termination (not supplied)

| CHOOSE CONTROL MODULE OR HARNESS DEPENDENT ON VALVE SYSTEM | |
|---|---|
| PVC58MV | Power Vent Control Module - for Millivolt Models |
| PVC58IPI | Power Vent Control Module - for Proflame 1 - IPI Models |
| 584-X12 | Harness for Proflame 2 IPI - Deluxe Models |
| PVH20H | Main Wiring Harness Assembly – Extension Harness (20ft) |

**CHOOSE VENTING TO BE USED: SECTION 1:** 5/8 HARD PIPE **- SECTION 2:** 3/5" HARD PIPE - **SECTION 3**: 4x6-5/8" HARD PIPE **- SECTION 4:** FLEX VENT

| SECTION 1 | DIRECT VENT HARD PIPE 5/8"– Used for entire installation – Order Z58DFA |
|---|---|
| Z58DFA | Duravent Hard Pipe Adapter – 5/8" (Sloped Flue) **Note:** Only sloped flues require Z58DFA adapter. |

| SECTION 2 | DIRECT VENT HARD PIPE 3/5" (including MG Duravent CVS 3/5" Vent System) - Used for entire installation- Order PVA5835, PVA3558 |
|---|---|
| PVA5835 | Duravent REDUCER- 5/8" to 3/5" ADAPTER (used at flue of fireplace) (Requires a one-foot section of MG Hard Pipe at flue before using PVA5835) |
| PVA3558 | **Termination End**<br>Duravent Pipe Increaser- at Power Vent |

| SECTION 3 | DIRECT VENT HARD PIPE 4 x 6-5/8"- Used for entire installation- Order ZDVDRA, ZDVDIA |
|---|---|
| ZDVRA | Duravent REDUCER- 5/8" to 4x6-5/8" ADAPTER (used at flue of fireplace) (*Requires a one-foot section of MG Hard Pipe at flue before using ZDVDRA)* |
| ZDVDIA | **Termination End**<br>Duravent Pipe Increaser- at Power Vent |

| SECTION 4 | FLEX VENT – Used for entire installation – order Z58PVA |
|---|---|

**Note:** Must use a one-foot section of 5/8 DV hard pipe (not supplied) to connect to the Power Vent Termination.

| | |
|---|---|
| Z58PVA | Flex Pipe Adapter Kit - (to adapt flex pipe to power vent to hard pipe) |

| FLEX VENTING KITS | |
|---|---|
| Z58FK5 | Flex Kit (5" & 8" Dia.) x 2.5' (Unexpanded) 5' Expanded |
| Z58FK8 | Flex Kit (5" & 8" Dia.) x 4' (Unexpanded) 8' Expanded |
| Z58FK20 | Flex Kit (5" & 8" Dia.) x 10' (Unexpanded) 20' Expanded<br>*Kits are complete with spring stand-offs & silicone. |

| POWER VENT ACCESSORIES | |
|---|---|
| ZDV5FC | Flex Connector 5" Diameter |
| ZDV8FC | Flex Connector 8" Diameter |
| ZDV5FCL | Flex Clamp 5" |
| ZDV8FCL | Flex Clamp 8" |
| ZDV4SS | Spring 4" Standoff Spacer |
| PVH58WT | Wall Thimble for Power Vent |

# ZCVRB60 Parts List

Listed for USA/Canada as a Vented Gas Fireplace, Includes: Linear Burner, Bronze Glass Media, SIT Valve with Hi/Lo Adjustment, 5/8" Top Flue, Tempered Glass, Safety Screen

| Part Numbers | Description |
|---|---|
| ZCVRB60N | Fireplace Linear, Millivolt Valve (as above) Natural Gas |
| ZCVRB60NE | Fireplace Linear, IPI Valve (as above) Natural Gas |
| MQZCVRB60NE2 | Fireplace Linear, Proflame 2 IPI Remote-Thermostat-Mod-Fan-LED - NG |
| ZCVRB60LP | Fireplace Linear, Millivolt Valve (as above) Propane |
| ZCVRB60LPE | Fireplace Linear, IPI Valve (as above) Propane |
| MQZCVRB60LPE2 | Fireplace Linear, Proflame 2 IPI Remote-Thermostat-Mod-Fan-LED - LP |

| **Enclosure Grill - Optional - When ventilating enclosure -** | |
|---|---|
| VL60EG | Enclosure Grill 3-1/2"H x 60-1/2"W, – c/w 4 louver grill (ready to paint), Outer Trim Grill Mount (ready to paint), Hidden Frame Grill Mount (Black) |
| VL60EGS | Grill - Side (Pair) for Enclosure - Unfinished (16 3/16" x 7 1/4") |

| **Optional Wall Surrounds** | |
|---|---|
| ZCVRB60S1BL | Surround Trim Kit -1 1/2" Wide - Black (Covers 64"W x 23"H) |
| ZCVRB60S1SS | Surround Trim Kit - 1 1/2" Wide - Stainless Steel (Covers 64"W x 23"H) |

| **Optional Media** (Max Glass 15 LBS NG, 10 LBS Propane) | |
|---|---|
| RBCB1 | Cannonballs- Assorted size and colors |
| MQRBD1 | Driftwood/Rocks, 4 ea. |
| MQRBD3 | 5 Piece Driftwood Log Set |
| MQRBD4 | 3 Piece Driftwood Log Set |
| MQRBRW | 5 Piece Birch Wood Log Set |
| MQLOAK1 | 5 Piece Oak Log Set |
| MQLOAK2 | 4 Piece Oak Log Set (to be used with MQLOAK1) |
| MQ46D | Driftwood Log Set- 3pcs. |
| MQSTONE | Decorative Stones |
| MQSTONE10 | Decorative Stones - 10 PCE Set |
| MQROCK2 | Rock Set Natural |
| MQROCK3 | Rock Set Multi-Color |
| MQEMBER | Glowing Embers |
| MQG5ZG | Decorative Ember Glass ZIRCON Glacier Ice - 5 lbs. |
| MQG5A | Decorative Ember Glass Cobalt Blue |
| MQG5B | Decorative Ember Glass - Black |
| MQG5C | Decorative Ember Glass - Bronze |
| MQG5W | Decorative Glass 1/2" White |

| **Optional Fireplace Accessories** | |
|---|---|
| ULK64 | Universal Light Kit - Four Lamps (For Millivolt/PF1) |
| MQRB60RLS | Refractory Liner - Stacked Brick (4 PCE) |
| ZCVRB60PL | Porcelain Reflective Panel Liner (3 PCE) |
| V60PTLK | Tile Lip Kit |
| Z46FK | Fan Kit w/Variable Speed Wall Mount Control (Temperature Sensing) |
| Z46FK2 | Fan Kit - Proflame 2 (Replacement Part) |
| 26IDV-P260 | Blower Motor (Replacement) |
| ZCVRB60CSS | Safety Screen Barrier (Replacement) |
| 60VL-312 | Tempered Glass (Replacement) |
| 47ZRB-123A | Door Latch Assembly (Replacement) |

| **Replacement Burner Assembly / Burner** | |
|---|---|
| 60ZRB-200A | Burner Tube |
| 60ZRB-BLPSI | Burner Assembly- Propane c/w Valve System (ZCVRB60LP) |
| 60ZRB-BNGSI | Burner Assembly- Natural Gas c/w Valve System (ZCVRB60N) |
| 60ZRB-BLPSIE | Burner Assembly- Propane c/w Valve System (ZCVRB60LPE) |
| 60ZRB-BNGSIE | Burner Assembly- Natural Gas c/w Valve System (ZCVRB60NE) |

| **Conversion Kits** | |
|---|---|
| 60ZCVRB-CKLP | LP Conversion Kit for ZCVRB60 Millivolt |
| 60ZCVRB-CKNG | NG Conversion Kit for ZCVRB60 Millivolt |
| 60ZCVRB-CKLPI | LP Conversion Kit for ZCVRB60 IPI |
| 60ZCVRB-CKNGI | NG Conversion Kit for ZCVRB60 IPI |
| 60ZCVRB-CKLP2 | Conversion Kit - IPI Proflame 2 - To Propane |
| 60ZCVRB-CKNG2 | Conversion Kit - IPI Proflame 2 - To Natural Gas |

| **Optional Thermostats and Remote Controls** | |
|---|---|
| Z2MT | Thermostat Digital - Vertical Wall Mount - MV/PF1 |
| Z80PT | Thermostat Programmable Digital - Wall Mount - MV/PF1 |
| GFRC | Remote Control Millivolt / IPI – On/Off |
| GTRC | Remote Control Millivolt - Thermostat |
| GTMRCN | Remote Control Millivolt – Thermostat/Modulating - NG |
| GTMRCP | Remote Control Millivolt – Thermostat/Modulating - LP |

| | |
|---|---|
| GTFRCN | Remote Control Millivolt – Thermostat/Modulating/Fan - NG |
| GTFRCP | Remote Control Millivolt – Thermostat/Modulating/Fan - LP |
| EGTRC | Remote Control IPI PF1- Thermostat |
| EGTMRCN | Remote Control IPI PF1- Thermostat/Modulating - NG |
| EGTMRCP | Remote Control IPI PF1- Thermostat/Modulating - LP |
| EGTFRCN | Remote Control IPI PF1- Thermostat/Modulating/Fan - NG |
| EGTFRCP | Remote Control IPI PF1 - Thermostat/Modulating/Fan - LP |

**Valve System Parts / Millivolt**

| | |
|---|---|
| 1000-P136WR | Generator / Thermopile |
| 1001-P069SI | Electrode Sparker 915.069 TC SIT |
| 1001-P216SI | Thermocouple 290.216 TC SIT |
| 1001-P165SI | Orifice Pilot NG 977.165 TC SIT |
| 1001-P167SI | Orifice Pilot LP 977.167 TC SIT |
| 1001-P280SI | Tubing 24” |
| 1001-P633SI | Valve Nova LP Hi/Lo 0820651 |
| 1001-P634SI | Valve Nova NG Hi/Lo 0820652 |
| 1001-P713SI | Pilot Burner LP 199.713 TC SIT |
| 1001-P714SI | Pilot Burner NG 199.714 TC SIT |

**Electronic Ignition Replacement Parts IPI**

| | |
|---|---|
| 1006-P002si | Valve IPI (NG; Hi/Lo) |
| 1006-P003si | Valve IPI (LP; Hi/Lo) |
| 1002-P047si* | Pilot Assembly (LP) *Longer (35 “) Must be used when purchasing complete Pilot |
| 1002-P033si* | Pilot Assembly (NG) *Longer (35 “) Must be used when purchasing complete Pilot |
| 1002-P119si | Spark Electrode (35”) |
| 1002-P910si | Electrode Flame Sensor (35”) |
| 1002-P302si | IPI Ignition Board |
| 1002-P850si | AC Wall Adapter |
| 1002-P12BH | Battery Pack |
| 1002-P912si | Wiring Harness |
| 1001-P166si | Orifice Pilot (NG) |
| 1001-P168si | Orifice Pilot (LP) |
| 1002-P013si | Stepper Motor (NG) |
| 1002-P012si | Stepper Motor (LP) |
| 1002-P016si | Hi/Lo Regulator (NG) |
| 1002-P014si | Hi/Lo Regulator (LP) |

**Miscellaneous Parts**

| | |
|---|---|
| 1000-150GE | Silicone GE Red IS806 #736 |
| 1000-150MP | Hi-Temp Millpac Sealant 840099 |
| 1000-214 | Piezo-Igniter 1244-17 MARK 21 |
| 1000-215 | Pal Nut (18MMXI.5MM)BLK (1364.03) |
| 1000-218 | Switch Ivory (1451/001) |
| 1000-227 | Cover Ivory (86001/001) |
| 1000-255 | Orifice Brass - (State Size) |
| 3600-B139 | Explosion felt Gasket |
| 2000-080 | Thermodisc 2450 (For Blower) |
| 1000-306 | Thermalcord - Adhesive Back for Door Frame |
| 1000-085 | Control Variable Speed KBWC-13BV |
| FP15GC | Stainless Steel Gas Connector |

**Kingsman Fireplace Venting**

| | |
|---|---|
| Z58VT | Vertical Vent Termination |
| Z58HT | Horizontal Vent Termination |
| FDVHSCU | Safety Cage for Horizontal Termination |
| Z58AIS | Attic Insulation Shield |
| Z58AIS24 | Attic Insulation Shield |
| ZDVVOS | Offset Support |
| Z58FS | Firestop Spacer |
| Z58RS | Roof Support |
| Z58GP36 | Galvanized Pipe 5” and 8” Dia. x 36” (Vertical Installations) |
| Z58SS | Siding Shield |
| Z58WT | Wall Thimble (Horizontal Venting) |
| Z58WTS | Horizontal Wall Thimble Shield (For Low Enclosures) |
| ZDVSS | Siding Shield for FDVHT |
| Z58SSLR | Siding Shield - Large Return |
| Z58GP | Galvanized Pipe 8” Dia. x 48” (Vertical Installations) |
| Z58MIS60 | Mylar Insulation Sleeve 8” x 5ft |
| Z58AAF | Flashing 8” c/w Storm Collar (1/12 to 7/12) |
| Z58AF2 | Flashing 8” c/w Storm Collar (8/12 to 12/12) |
| Z58AF3 | Flashing 8” c/w Storm Collar Flat |
| ZDV8SC | Storm Collar 8” |
| Z58FK5 | Flex Kit (5” & 8” Dia.) x 2.5’ (Unexpanded) 5’ Expanded |
| Z58FK8 | Flex Kit (5” & 8” Dia.) x 4’ (Unexpanded) 8’ Expanded |
| Z58FK20 | Flex Kit (5” & 8” Dia.) x 10’ (Unexpanded) 20’ Expanded *Kits are complete with spring stand-offs & silicone. |
| Z58HSK5 | Horizontal Round Termination Vent Starter Kit - 5/8" X 5 FT Length, Wall Thimble Shield, Horizontal Vent Termination, Wall Thimble, 60" Flex Pipe, Screws, Mill Pac. |
| ZDV5FC | Flex Connector 5” Diameter |
| ZDV8FC | Flex Connector 8” Diameter |
| ZDV5FCL | Flex Clamp 5” |
| ZDV8FCL | Flex Clamp 8” |
| ZDV4SS | Spring 4” Standoff Spacer |

## Troubleshooting the Gas Control System

### ⚠ WARNING

BEFORE DOING ANY GAS CONTROL SERVICE WORK, REMOVE THE GLASS FRONT.
NOTE: Before troubleshooting the gas control system, be sure external gas shut off is in the "On" position.

| Problem | Possible Causes | Corrective Action |
|---|---|---|
| Spark igniter will not light. | Defective or misaligned electrode at pilot. | Check for spark at electrode and pilot: if no spark and electrode wire is properly connected, replace igniter. |
| | Defective igniter (push-button). | Using a match, light pilot. If pilot lights, turn off pilot and push the red button again. If pilot will not light - check gap at electrode and pilot should be 1/8" to 1/4" to have a strong spark. |
| Pilot will not stay lit after carefully following lighting instructions. | Defective thermocouple (flame switch where applicable). | Check pilot flame. Must impinge on generator and thermocouple. Clean and/or adjust pilot for maximum flame impingement on generator and thermocouple. Replace thermocouple if pilot will not hold. (Hand tight 1/8 turn on replacement) |
| | Defective valve magnet. | Replace valve, if pilot won't hold after the thermocouple is replaced. |
| Pilot burning, no gas to burner, valve knob “ON”, and wall switch “ON”. | Wall switch or wires defective. | Check wall switch and wires for proper connections. Jumper wire across terminals at wall switch. If burner comes on, replace defective wall switch. If okay, jumper wires, across wall switch wires at valve. If burner comes on, wires are faulty or connections are bad. |
| | Generator may not be generating sufficient voltage. | Check generator with millivolt meter. Take reading at generator terminals of gas valve. Should read 325 millivolts minimum while holding valve knob depressed in pilot position and wall switch "off" Replace faulty generator if reading is below specified minimum. |
| | Plugged burner orifice. | Check burner orifice for stoppage and remove. |
| | Defective automatic valve operator. | Remove wall switch wires from gas valve. Install jumper wires from top bottom terminals of gas valve. Turn valve on "ON". If main burner does not light, replace valve. |
| Frequent pilot outage problem. | Pilot flame may be too low or blowing (high) causing the pilot safety to drop out. | Clean and/or adjust pilot flame for maximum flame impingement on generator and thermocouple.<br>*See NOTE below – Seven Day Timer |
| Flame lifts off burner and goes out in less than 30 seconds. | Inner 4” liner has come off flue or termination, flame is starving for oxygen. | Attach 4" liner to flue or termination using screws, silicone and clamps as stated in manual. |
| Flame lifts off burner on one side while the rest of the flame remains lit. | Improper installation of firebrick. Firebrick is likely leaning. | Be sure to position firebrick against firebox walls and be sure to use brick clips attached to the inner side of firebox. |

***NOTE:** The pilot system for this appliance may be equipped with a **Seven Day Timer**, in which case the pilot flame will be extinguished if the main burner has not been turned ON for seven days.

This Seven Day Cycle is reset every time the main burner is cycled ON / OFF and the pilot remains lit.

If more than seven days has passed since the main burner has been cycled ON / OFF and the pilot is also out, follow the procedures described in this manual to light the pilot.

**NOTE: MILLIVOLT UNITS WITH 7 DAY TIMER –** When lighting pilot, the Pilot Knob must be pressed until a **BEEP** is heard. This procedure may take up to **TWO MINUTES.**

# LIMITED LIFETIME WARRANTY

This Limited Lifetime Warranty applies only while the unit remains at the site of the original installation and only if the unit is installed inside the continental United States, Alaska, Hawaii, and Canada. The warranty applies only if the unit is installed and operated in accordance with the printed instructions and in compliance with applicable installation and building codes and good trade practices.

**BASIC ONE YEAR WARRANTY**

During the first year after installation of the appliance, we will provide a replacement for any component part of your unit found to be defective in materials or workmanship, including labour costs. Repair work requires prior approval by Kingsman, labour costs are based on a predetermined rate schedule and any repair work must be done through an authorized Kingsman dealer.
(Excluded Components: Accent Light Bulbs, Gasketing, Glass Fronts, and Paint)

**LIMITED LIFETIME WARRANTY**

The heat exchanger, combustion chamber and burner of every Kingsman product excluding the Outdoor Firepit are warranted against materials or workmanship during the period the product is owned by the original owner. The part to be replaced must be returned to our distributor in exchange for the replacement part. Any labor, material, freight and/or handling charges associated with any repair or replacement pursuant to this Limited Lifetime Warranty will not be covered by this warranty.

**GENERAL TERMS**

In lieu of providing a replacement part, we may, at our option, provide the distributor's component purchase price from us or a credit equal to the distributor's component purchase price from us toward the purchase of any new unit which we distribute. If a credit is given in lieu of a replacement part, the rating plate from the unit being replaced must be submitted on a warranty claim, and the unit being replaced must be made available to our distributor for disposition.

In establishing the date of installation for any purpose, including determination of the starting date for the term of this Limited Lifetime Warranty, reasonable proof of the original installation date must be presented*, otherwise the effective date will be based upon the date of manufacture plus thirty (30) days.

We will not be responsible for and you, the user, will pay for: (a) damages caused by accident, abuse, negligence, misuse, riot, fire, flood, or Acts of God (b) damages caused by operating the unit where there is a corrosive atmosphere containing chlorine, fluorine, or any other damaging chemicals (other than in a normal residential environment) (c) damages caused by any unauthorized alteration or repair of the unit affecting its stability or performance (d) damages caused by improper matching or application of the unit or the unit's components (e) damages caused by failing to provide proper maintenance and service to the unit (f) any expenses incurred for erecting, disconnecting or dismantling the unit (g) parts or supplies used in connection with service or maintenance (h) damage repairs, inoperation or inefficiency resulting from faulty installation or application (i) electricity or fuel costs or any increase in electricity or fuel cost whatsoever including additional or unusual use of supplemental electric heat.

We shall not be liable for any incidental, consequential, or special damages or expenses in connection with any use or failure of this unit. We have not made and do not make any representation or warranty of fitness for a particular use or purpose, and there is no implied condition of fitness for a particular use or purpose. We make no express warranties except as stated in this Limited Lifetime Warranty. No one is authorized to change this Limited Lifetime Warranty or to create for us any other obligation or liability in connections with this unit. Any implied warranties shall last for one year after the original installation. Some states and provinces do not allow the exclusion or limitation of incidental or consequential damages or do not allow limitations on how long an implied warranty or condition lasts, so the above limitations or exclusions may not apply to you. The provisions of this limited warranty are in additions to and not a modification of or subtraction from any statutory warranties and other rights and remedies provided by law.

Save this certificate. It gives you specific legal rights, and you may also have other rights which may vary from state to state and province to province.

In the event your unit needs servicing, contact your dealer or contractor who installed or serviced your unit. When requesting service, please have the model and serial number from each unit readily available. If your dealer needs assistance, the distributor is available for support and we, in turn support the distributor's efforts.

Fill in the installation date and model and serial numbers of the unit in the space provided below and retain this limited warranty for your files.

**Model No.** _____ **Serial No.** _____ **Date installed** _____

**Dealer or Contractor Name:** _____

*To receive advantage of your warranty, you must retain the original records that can establish the installation date of your unit.

**The Ultimate in Design, Engineering & Quality**