MONESSEN

LOVE AT FIRST LIGHT

Exacta

36" Vent Free Gas Fireplace

Scan QR code for installation manual for final dimensions and requirements.

FRAMING DIMENSIONS	FRONT WIDTH	BACK WIDTH	HEIGHT	DEPTH	VIEWING AREA
	42-1/2"	42-1/2"	34-1/4"	19-3/4"	36" x 27"

FRAMING DIMENSIONS

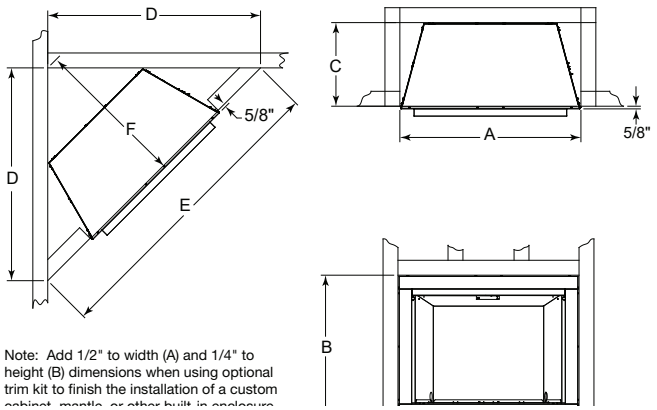

Note: Add 1/2" to width (A) and 1/4" to height (B) dimensions when using optional trim kit to finish the installation of a custom cabinet, mantle, or other built-in enclosure.

A	B	C	D	E	F
42-1/2" (1080mm)	34-1/4" (870mm)	19-3/4" (502mm)	50" (1270mm)	70-3/4" (1798mm)	36" (915mm)

MINIMUM HEARTH DIMENSIONS

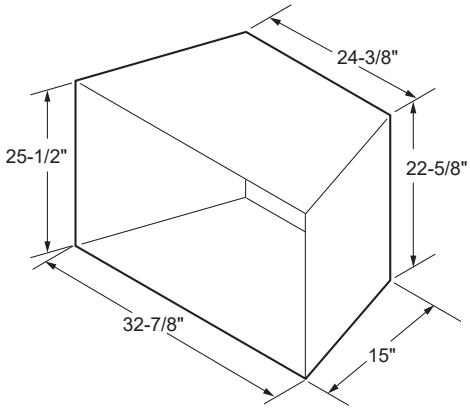

Dimensions shown are with concrete liner installed.

ACTUAL DIMENSIONS	FRONT WIDTH	BACK WIDTH	HEIGHT	DEPTH	VIEWING AREA
	42"	31-1/4"	34"	20"	36" x 27"

TOP VIEW

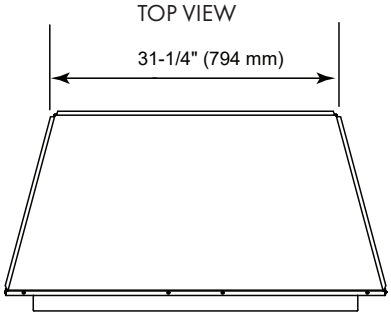

LEFT SIDE

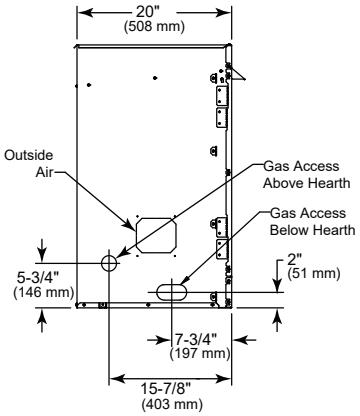

FRONT VIEW

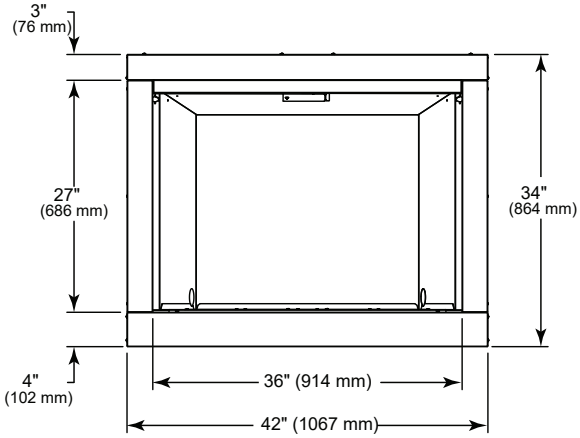

RIGHT SIDE

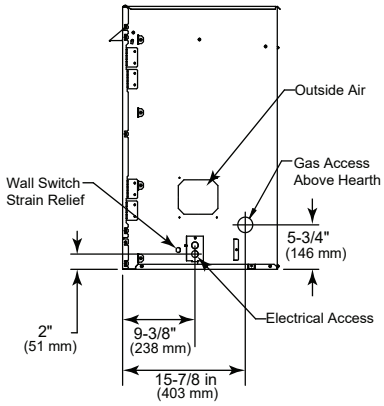

COMBUSTIBLE MANTEL

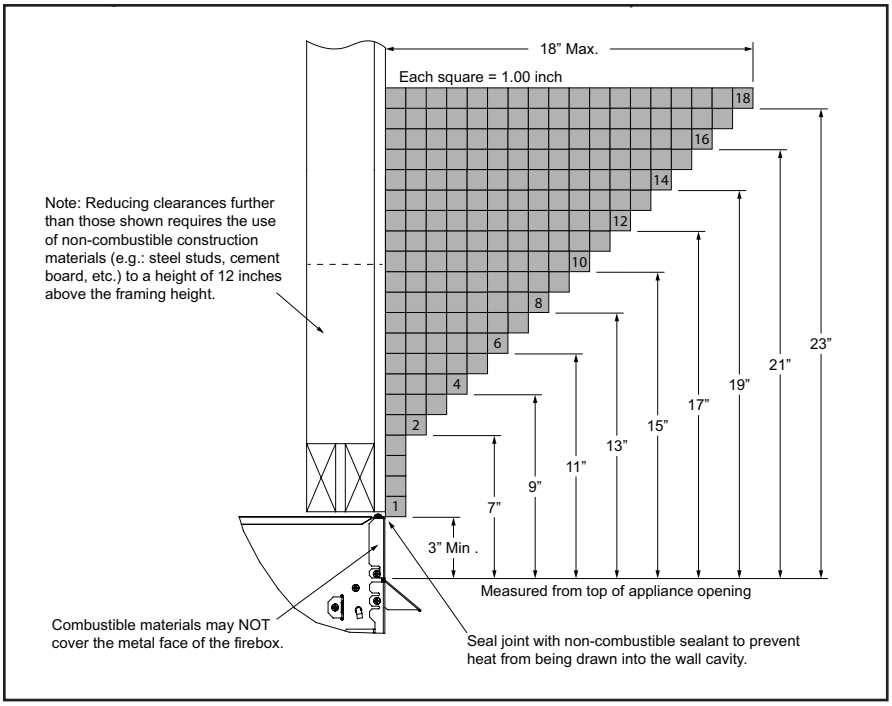

COMBUSTIBLE MANTEL LEG

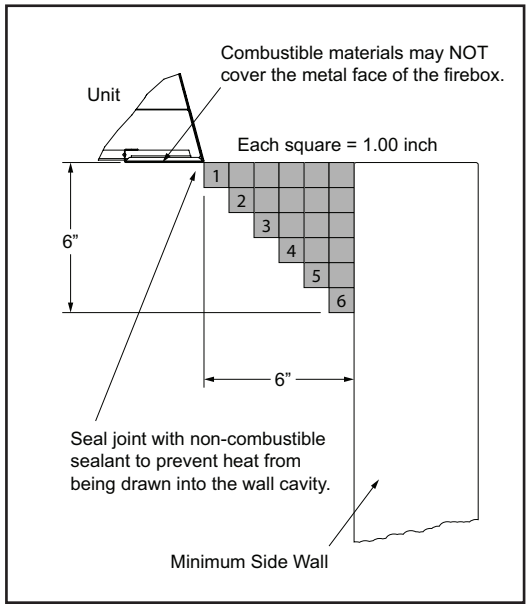

NON-COMBUSTIBLE MANTEL

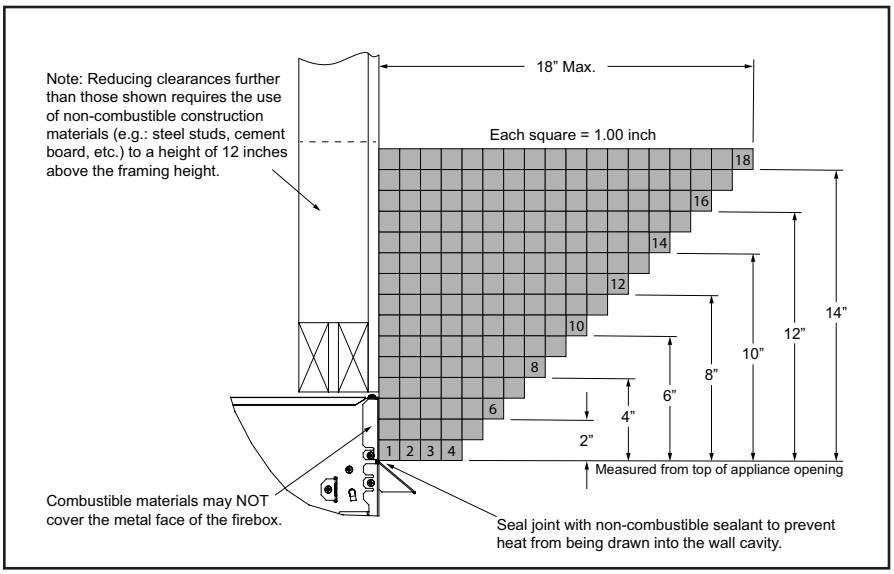

NON-COMBUSTIBLE MANTEL LEG

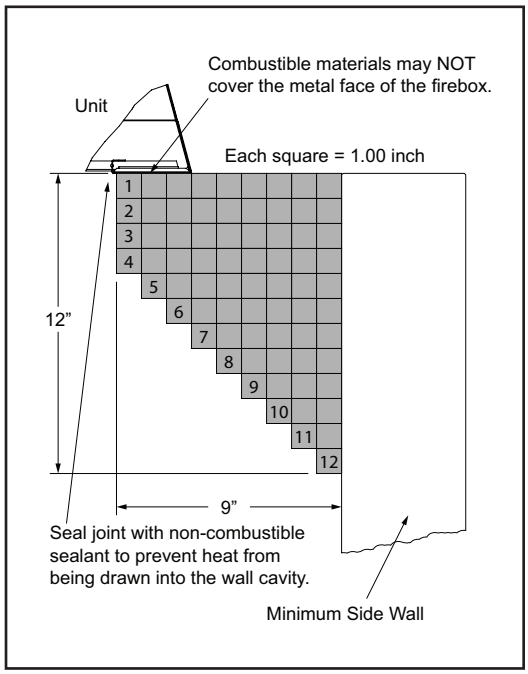

CLEARANCES TO COMBUSTIBLES

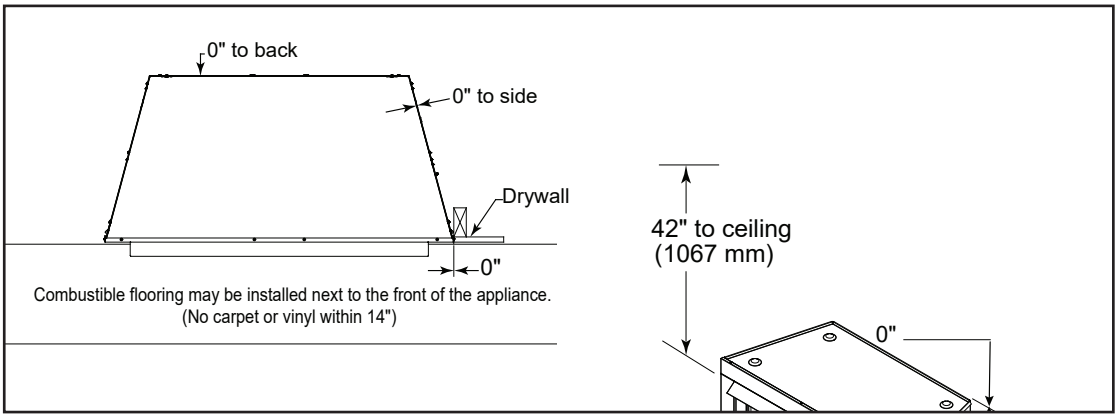

PRODUCT LISTING CODE	
US	ANSI Z223.1 / NFPA54 CSA / ANSI Z21.11
c UL us LISTED	UL Certified

Product information provided is not complete and is subject to change without notice. Product installation must adhere strictly to instructions accompanying product to avoid risk of fire and potential injury.