Ducted Passive Heat System for Heat Management

Ducted Passive Heat - Side Discharge: PHSI-MCE

Passive Heat Appliance Models: MEZZO36-C / MEZZO48-C Series, CRAVE4836-C / CRAVE6048-C Series, ECHELON36-C / ECHELON48-C Series

Installation Instructions

Leave this manual with party responsible for use and operation.

CAUTION! Risk of Cuts, Abrasions or Flying Debris. *Wear protective gloves and safety glasses during installation. Sheet metal edges are sharp.*

CAUTION! Do not install damaged components.
If any parts are missing or damaged, contact your dealer before starting installation. ***DO NOT*** *install a damaged kit.*

DANGER

HOT GLASS WILL CAUSE BURNS.

DO NOT TOUCH GLASS UNTIL COOLED.

NEVER ALLOW CHILDREN TO TOUCH GLASS.

A barrier designed to reduce the risk of burns from the hot viewing glass is provided with this appliance and must be installed for the protection of children and other at-risk individuals.

WARNING! Risk of Fire!

- *Combustible materials MUST NOT overlap or be placed behind a decorative front.*
- *DO NOT apply combustible materials beyond the minimum clearances. Comply with all minimum clearances to combustibles as specified. Overlapping materials could ignite and will interfere with proper operation of decorative fronts.*

Table of Contents

1. Introduction 1
2. Kit Contents 2
3. Preparation 3
4. Framing (2 X 4 Studs) 5
5. Installation Instructions 6
6. Finishing Instructions - Side Discharge 11

1. Introduction

The Side Discharge Ducted Passive Heat (PHSI-MCE) System conveys warm air from the fireplace into the same room through a front discharge slot connected to the appliance heat management knock outs with the provided flex ducting. Installation of the Ducted Passive Heat kit must be done in conjunction with the appliance installation.

Installation of this kit MUST be performed by a qualified service technician.

WARNING! Risk of Fire! *DO NOT install the Ducted Passive Heat (PHSI-MCE) Heat Management System with models that are not approved. Overheating will occur.*

The Side Discharge Passive Heat Kit is not approved for use on 60 or 72 sized appliances.

The Ducted Passive Heat kit is tested and safe when installed in accordance with this installation manual. It is your responsibility to read all instructions before starting installation and to follow these instructions carefully during installation.

The Ducted Passive Heat kit is carefully engineered and must be installed only as specified. If you modify it or any of its components you will void the warranty, and you may possibly cause a fire hazard. Installation must be done according to applicable local, state, provincial, and/or national codes.

2. Kit Contents

Verify and remove contents from packaging before beginning installation. See Figure 2.1.

Note: The flexible duct used with the Ducted Passive Heat is manufactured and marked to the requirements of UL-181, Class I air duct.

Contents of Ducted Side Discharge Passive Heat Kit (PHSI-MCE)

SIDE DISCHARGE / OPEN TOP DISCHARGE KITS (PHSI-MCE)		
DESCRIPTION	**SERVICE PART NO.**	**QTY**
12 in. X 8 in. Register Cover	2560-120	2
Side Discharge Assembly	2560-015	2
Collar	SRV659-125	2
Flex Air Duct (6” Diameter x 25 ft.)	SRV659-200	1
Gear Clamp: Large	SRV662-803	4
Hurricane Screw	2005-861	8
	Replacement part: 2005-861/25	1
Pull Tool	2600-200	1 Set
Inner Flue, Top	Service part not available	2
Self-Tapping #8 Screw	Service part not available	4

2560-120
12 in. x 8 in. Register Cover
(Screws Included)

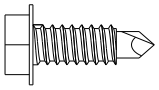

Self-Tapping #8 Screw

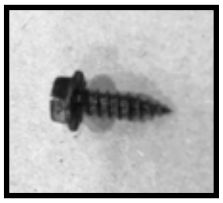

2005-861
Hurricane Screw

SRV659-200
6 Inch Round Duct

SRV659-125 Collar

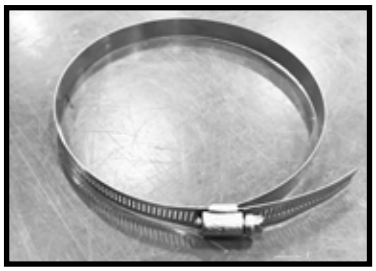

SRV662-803
Gear Clamp: Large

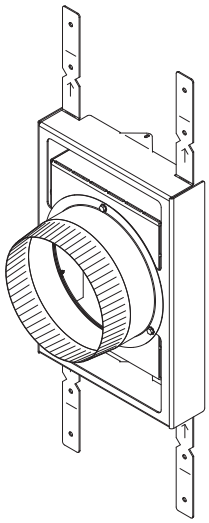

2560-015
Side Discharge Assembly

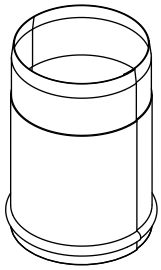

Inner Flue, Top

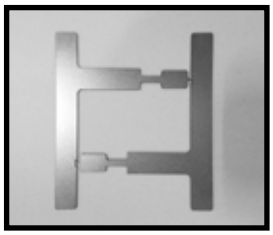

2600-200 Pull Tool
(1 Set)

Figure 2.1 Front Discharge Passive Heat Kit Components

3. Preparation

Plan the location of the appliance and the warm air duct runs. See Table 3.1.

***WARNING! Risk of Fire! DO NOT** fold/kink/pinch/obstruct 6 inch flexible ducts. Appliance could overheat.*

AIR DUCT LENGTH (Measurements in Inches)			
SIZE	**MIN.**	**MAX.***	**DUCT Quantity**
36	**28**	**150**	**2**
48	**28**	**150**	**2**
***This is the maximum vent run length possible with the included flex duct. Additional flex duct required for longer vent runs. Contact dealer to order.**			
PHSI-MCE is not approved for 60 and 72 inch models.			

Table 3.1 Air Duct Length & Clearances

If alternate heat management systems are used with the Ducted Passive Heat Kit (PHFR-MCE-XX), they must use an outside heat management knockout location on the far left or right of the appliance.

Things to consider:

Electrical Wiring:

It is recommended to maintain wire routing inside the stud pockets to reduce temperatures and visibility of wires.

Construction Materials:

It is recommended to plan ahead to reduce the amount of exposed finishing materials visible through the openings.

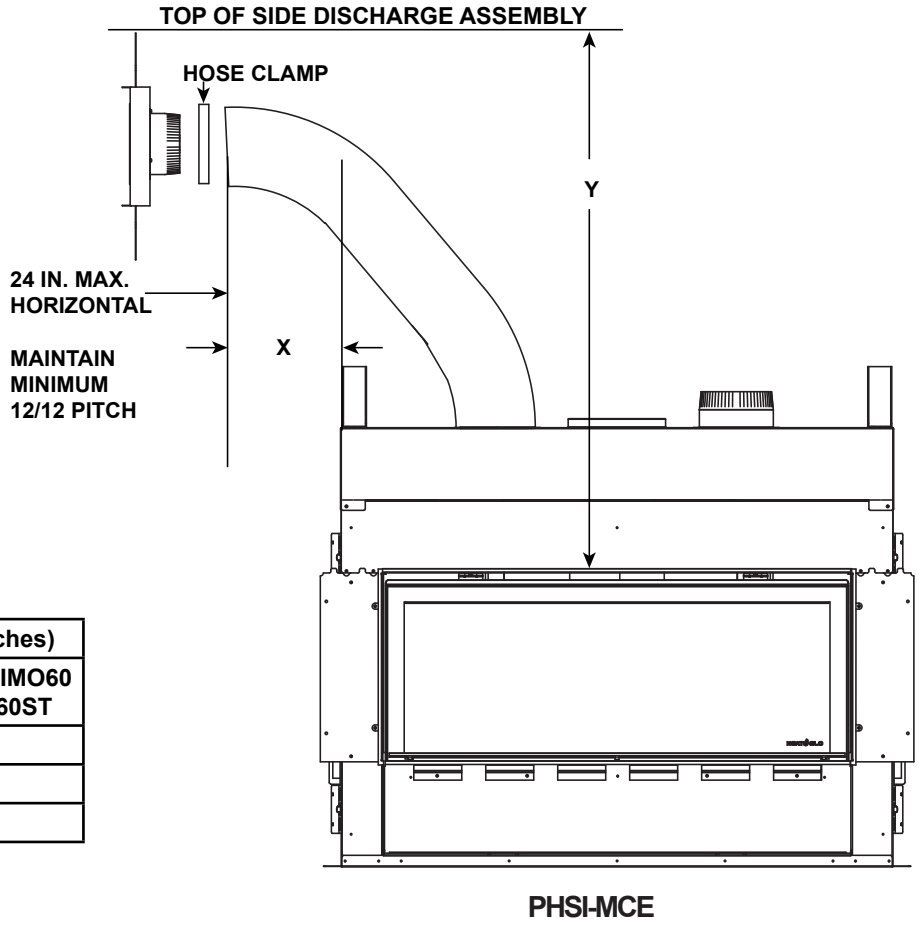

PITCH (In Inches)	
X	**Y Min.PRIMO60 PRIMO60ST**
0	**52**
12	**64**
24	**76**

Figure 3.1 Side Discharge - Maintain Pitch

Clearance - Sprinkler to Passive Heat

Figure 3.2 references the clearances that must be adhered to when installing a sprinkler head near a passive heat discharge opening.

* If the distance from the top of the passive heat front discharge opening to the ceiling is 36 inches or greater, then there is no 36 inch clearance requirement. This is for a ceiling sprinkler head installation only.

Note: When installing a sprinkler head near a heat discharge opening, it is recommended to use a sprinkler head with an Extra High sprinkler activation temperature rating.

• When installing a sprinkler head exterior of the chase, maintain the following clearances to discharge openings (convection slots, passive heat registers, heat zone registers, etc.): 36 inches top, 18 inches sides and 6 inches bottom.

• **DO NOT** install a sprinkler head inside a chase that is set up for passive heat.

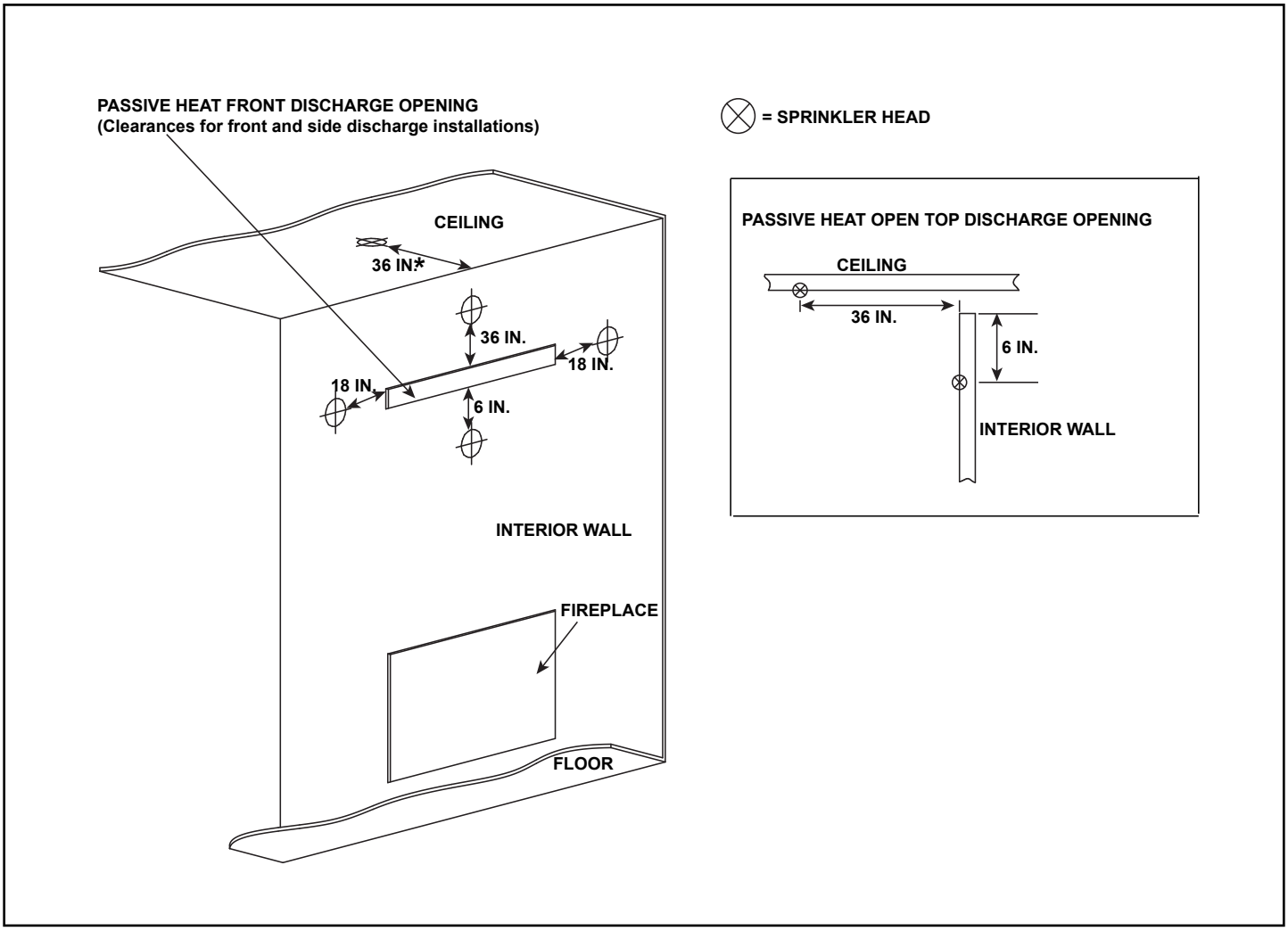

Figure 3.2 Sprinkler Head Clearance

4. Framing (2 X 4 Studs)

Clearances to Combustibles

Ducted Passive Heat Side Discharge (PHSI-MCE)
Single-Sided or See-Through

***WARNING! Risk of Fire! DO NOT** allow any combustible or non-combustible objects or materials to be placed where the disruption of airflow in discharge zone could occur. Appliance and combustible materials will overheat.*

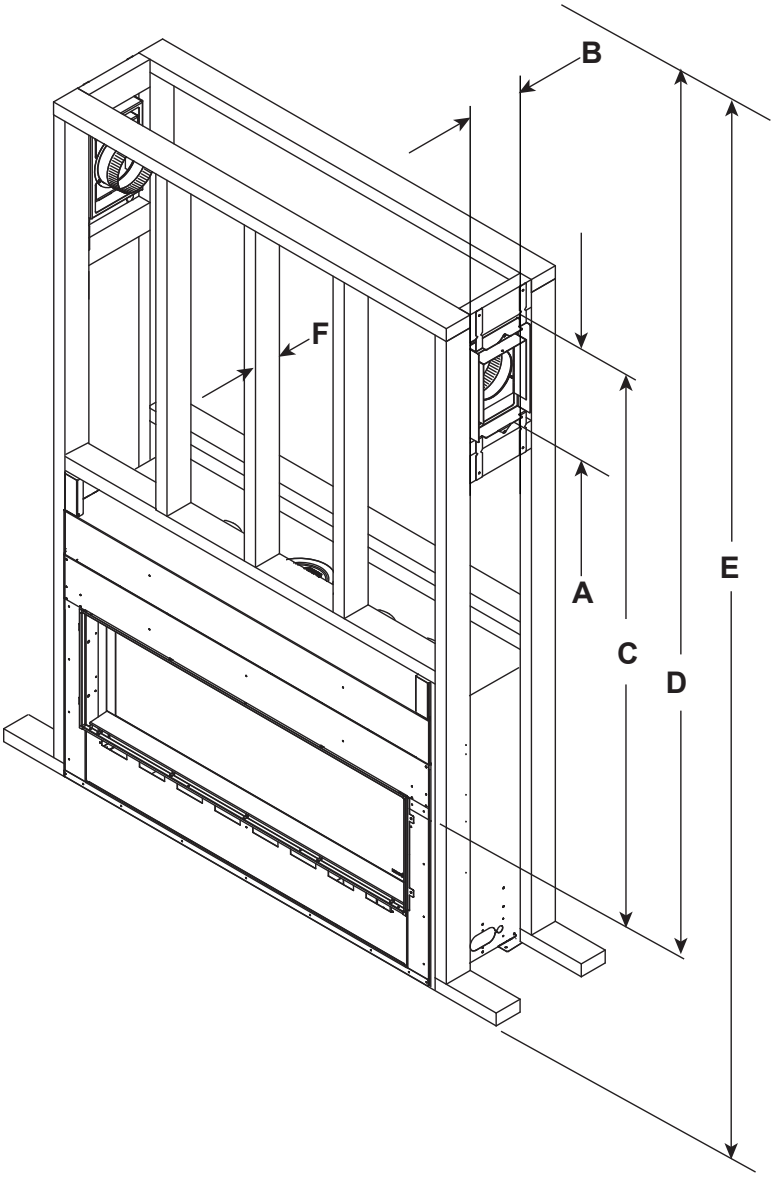

MINIMUM FRAMING DIMENSIONS							
		SIDE DISCHARGE					
		A	B	C	D	E	F
MODEL SIZE		Height of Discharge Opening	Width of Discharge Opening	Clearance Opening to Framing	Clearance Opening to Ceiling	Clearance Bottom of Appliance to Ceiling	2 X 4 Studs
36	Inches	16	10-3/16	50	52	76-1/2	3-1/2
	millimeters	406	259	1270	1321	1943	89
48	Inches	16	10-3/16	50	52	76-1/2	3-1/2
	millimeters	406	259	1270	1321	1943	89

Figure 4.1 Clearances to Combustibles - Passive Heat Side Discharge

5. Installation Instructions

Install Assemblies and Flexible Duct - Side Discharge

WARNING! Risk of Fire! *Remove ONLY the knockouts required for the specific heat management kits being installed. Appliance and combustible materials will overheat.*

WARNING! Risk of Overheating! *Both passive heat side discharge assemblies included with kit* ***MUST*** *be installed and operational. Overheating of appliance and combustible materials will occur.*

CAUTION! Risk of Cuts, Abrasions or Flying Debris. *Wear protective gloves and safety glasses during installation. Sheet metal edges are sharp.*

PHSI-MCE kits must be installed on the two inside passive heat knockouts unless a HEAT-OUT-GAS or HEAT-ZONE-GAS will also be installed. Outer knockouts may be used for additional heat management systems (HEAT-OUT-GAS, HEAT-ZONE-GAS). Do not remove the outer knockouts if they will not be used.

Only one passive heat option may be installed on a single appliance. Passive Heat kits without ducts may not be used in conjunction with the Ducted Passive Heat kit.

1. Remove the two inner heat management knockouts from the top of the appliance by dislodging them with a hammer and then using a screwdriver to remove from the holes. See Figure 5.1 and Figure 5.2. Install collars over the openings using hurricane screws provided in the kit.

2. Remove the insulation plug from each knockout. Discard. See Figure 9.

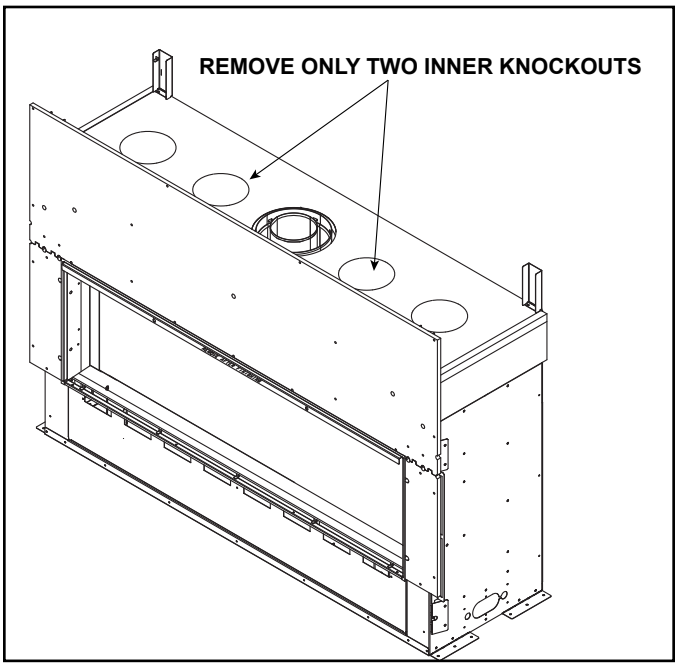

Figure 5.1 Remove Knockouts

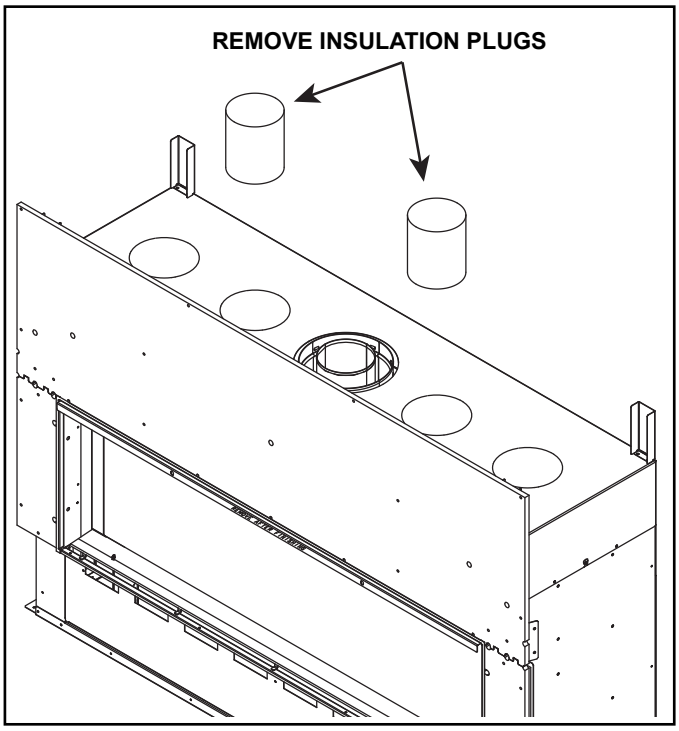

Figure 5.2 Remove Insulation Plugs

3. Set a collar in each of the holes where the knockouts were removed. See Figure 5.3.

4. Remove the screws from the heat shield as shown in Figure 5.7. Quantity and location of screws will vary between models.

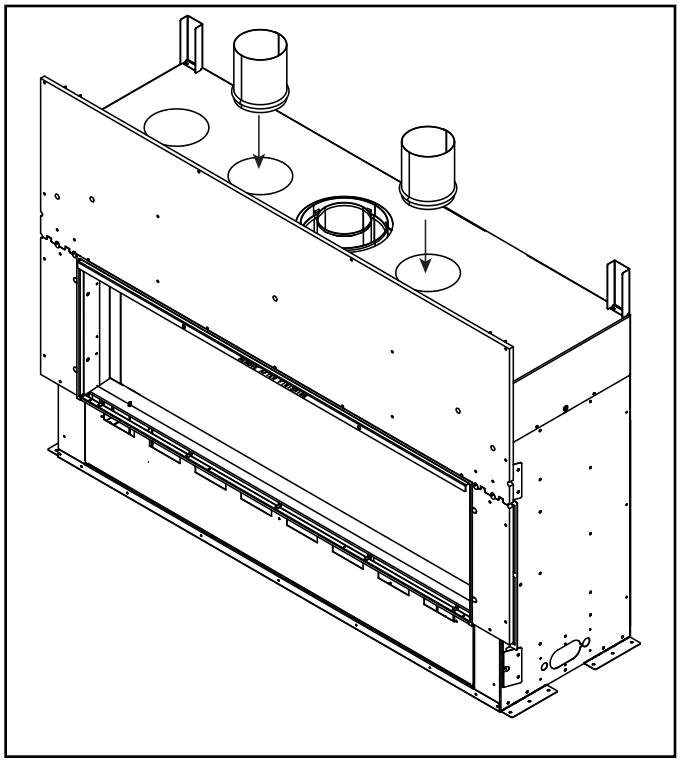

Figure 5.3 Install Inner Flues

5. Bend pull tools and break apart as shown in Figure 5.4 and Figure 5.5.

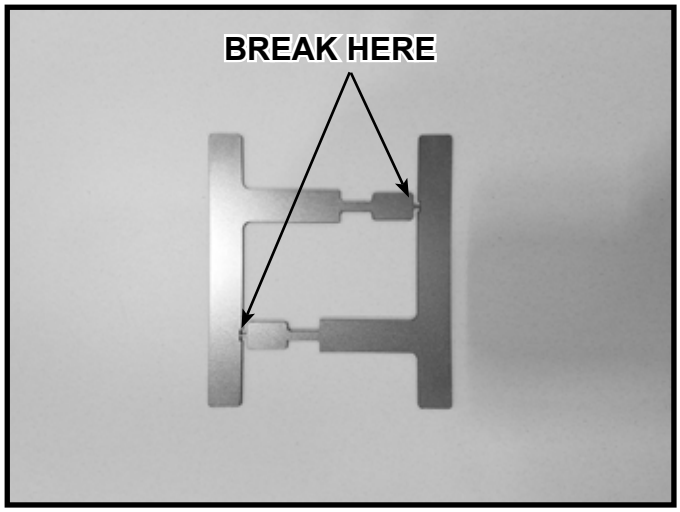

Figure 5.4 Bend and Break Pull Tools Apart

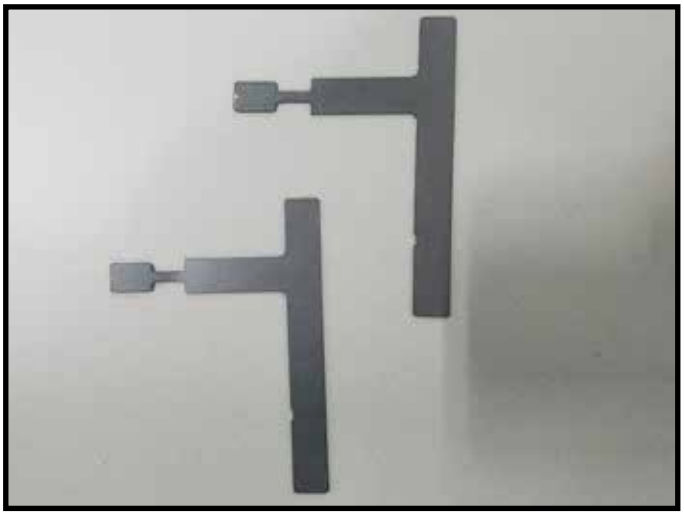

Figure 5.5 Pull Tools Separated

6. Insert pull tool into slots on left and right sides of appliance. See Figure 5.6.
7. Carefully pull the heat shield out of the appliance as shown in Figure 5.7 and Figure 5.8. Discard heat shield. Repeat procedure on other side if application is on a see-through appliance.

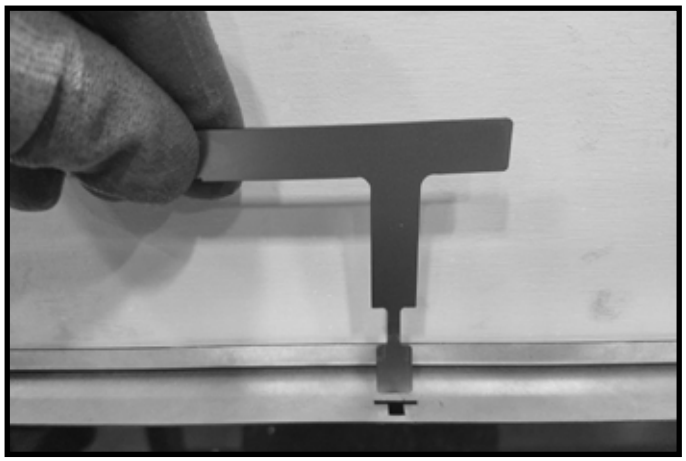

Figure 5.6 Pull Tool Inserted Into Slot

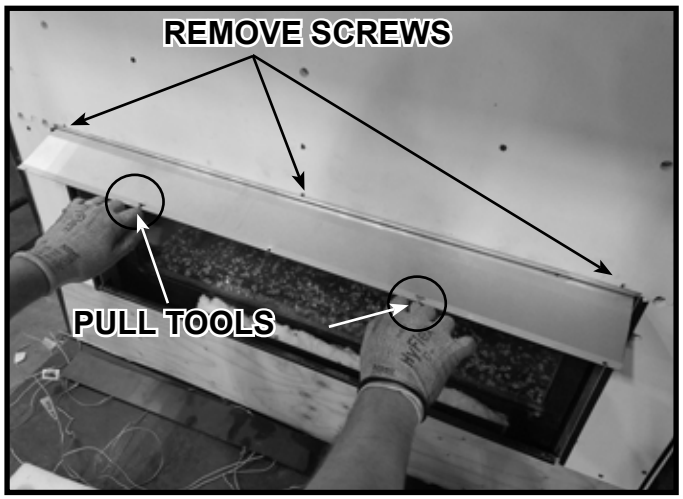

Figure 5.7 Use Pull Tools to Remove Heat Shield

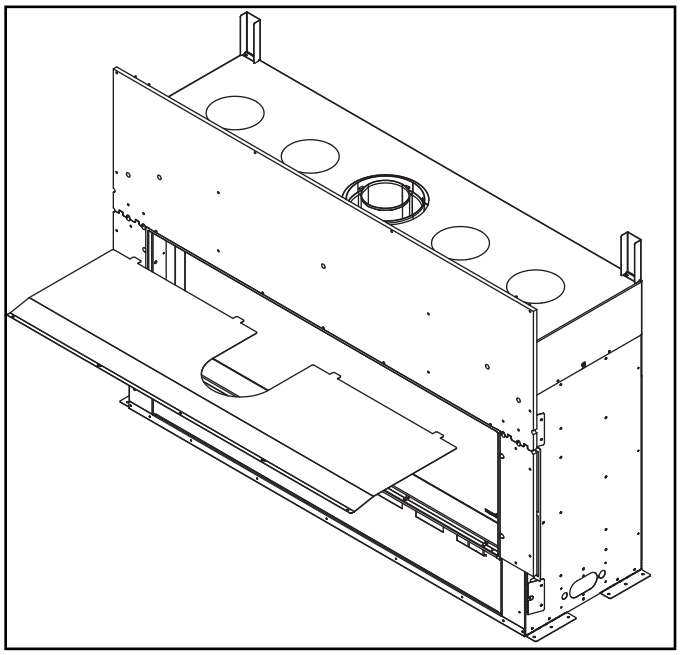

Figure 5.8 Remove Heat Shield

WARNING! Risk of Fire! *Remove all debris and objects from firebox top and appliance top before operating the appliance.*

8. Inspect for and remove all debris that may have accumulated or objects that may have been placed on the firebox top and appliance top during the installation process. All debris and objects must be removed prior to operation of the appliance. Firebox top and appliance top are shown in Figure 5.9.

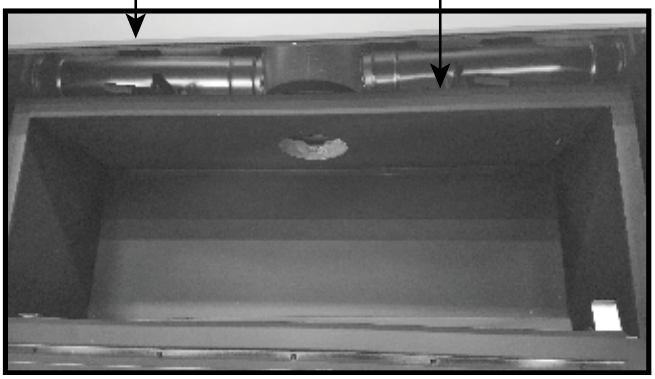

Figure 5.9

9. Install collars over the openings using hurricane screws provided in the kit. PHSI-MCE kits must be installed on the two inside passive heat knockouts. See Figure 5.10 and Figure 5.11.

WARNING! Risk of Fire! *DO NOT remove appliance heat management knock-outs unless an approved heat management system is installed. Appliance and combustible materials will overheat.*

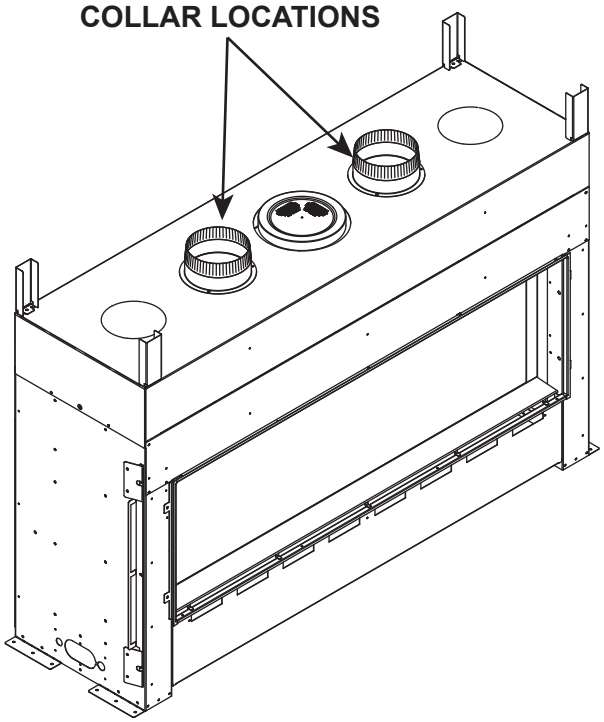

Figure 5.10 Remove Passive Heat Knockouts

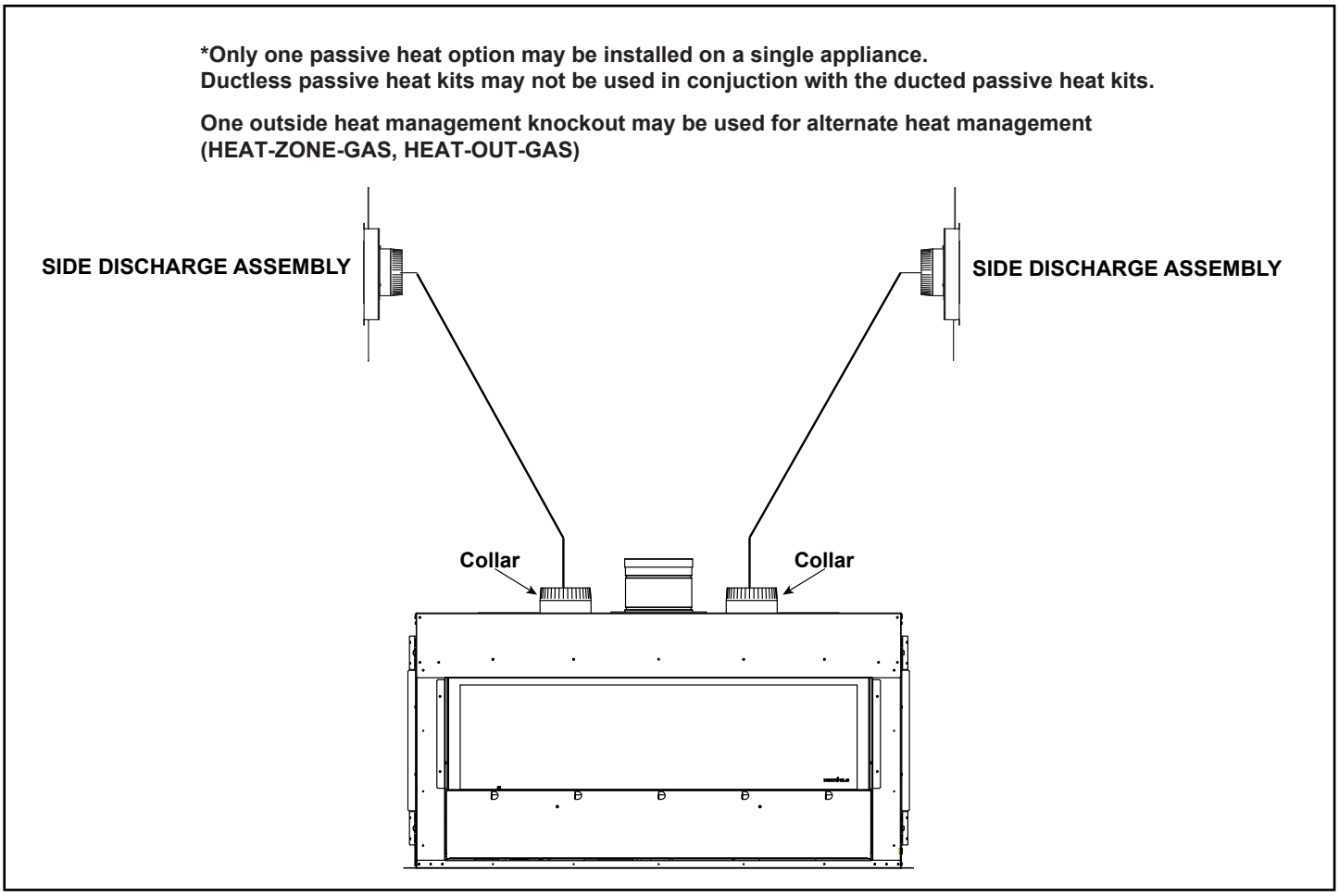

Figure 5.11 Ducted Passive Heat - Side Discharge Configuration / Remove Heat Management Knockouts.

WARNING! Risk of Fire! *DO NOT remove unused outer heat management knock-outs. Overheating of appliance and combustible materials will occur.*

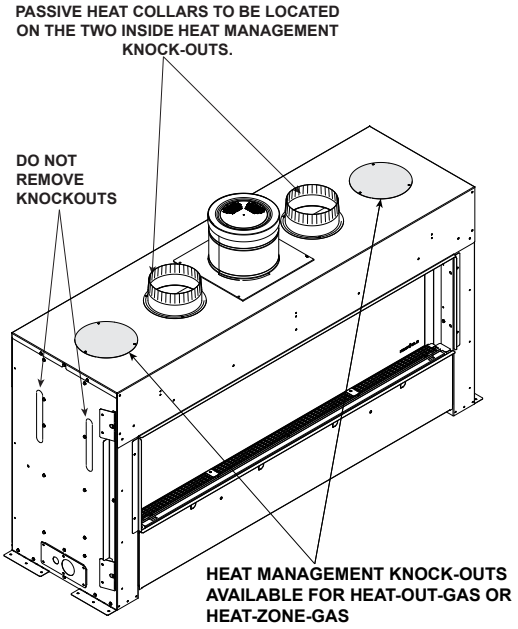

Figure 5.12 Install Collars Over Heat Management Openings

2. Place the side discharge assembly into the wall with the **arrows on the nailing tabs facing upward**. See Figure 5.13. The height of the side discharge assembly is denoted by the notches in the nailing tabs that are to be lined up with the edge of the header closest to the side discharge assembly. Ensure the side discharge assembly is centered in the wall. Mount side discharge assemblies into wall using drywall framing screws or nails.
3. Repeat Step 2 to install the second side discharge assembly on the other side of the appliance.

Figure 5.13 Side Discharge Assembly Nailing Tab Orientation

4. Cut flex venting to appropriate length to run from top of the appliance to the back side of the side discharge assembly ensuring there are not any kinks. Be sure that the flex venting is not so tight as to collapse where attached to the side discharge assembly and restrict airflow. Refer to Section 3 and Figure 3.1 regarding length and pitch requirements.

***WARNING! Risk of Fire! DO NOT** fold/kink/pinch/obstruct 6 inch flexible ducts. Overheating of appliance and combustible materials will occur.*

5. Secure the flex venting to the collars on both the appliance and the bottom of the side discharge assembly using the provided gear clamps. See Figure 5.14-5.17.

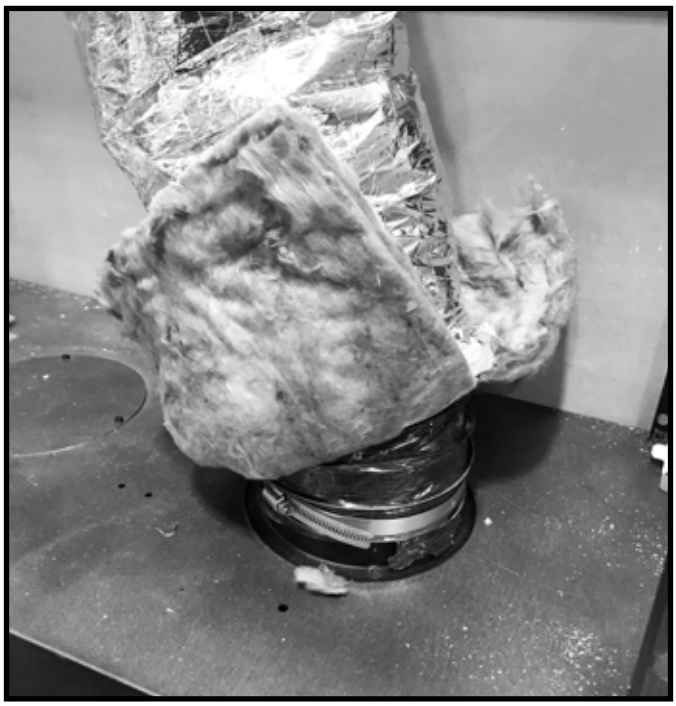

Figure 5.14 Install Flex Venting to Appliance

6. Install self-tapping screw through gear clamp into collar. Repeat for all collars. See Figure 5.15.

Note: It is acceptable to place the flex vent insulation and outer lining over the gear clamp once the gear clamp has been secured.

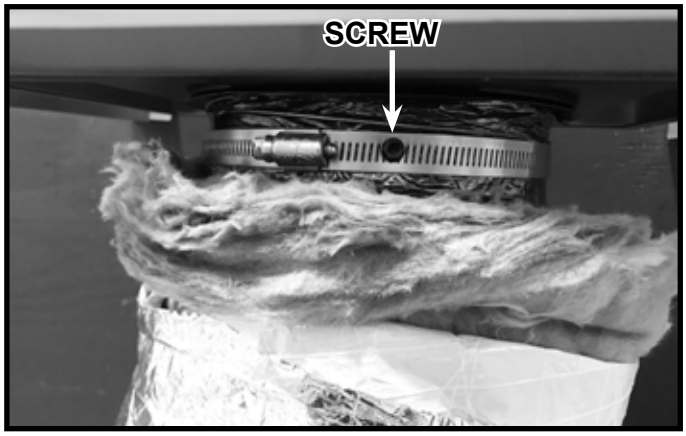

Figure 5.15 Install Screw into Collar

Figure 5.16 Install Flex Venting to Side Discharge Assembly

Figure 5.17 Flex Venting Installed

6. Finishing Instructions - Side Discharge

1. Apply wall sheathing material, such as drywall, up to 1/2 inch thick up to the edge of the installed side discharge assembly. See Figure 6.1 and Figure 6.2.

***WARNING! Risk of Overheating! DO NOT** apply wall sheathing past outside edge of plenum. Overheating of appliance and combustible materials will occur.*

Figure 6.1 Wall Sheathing Installed

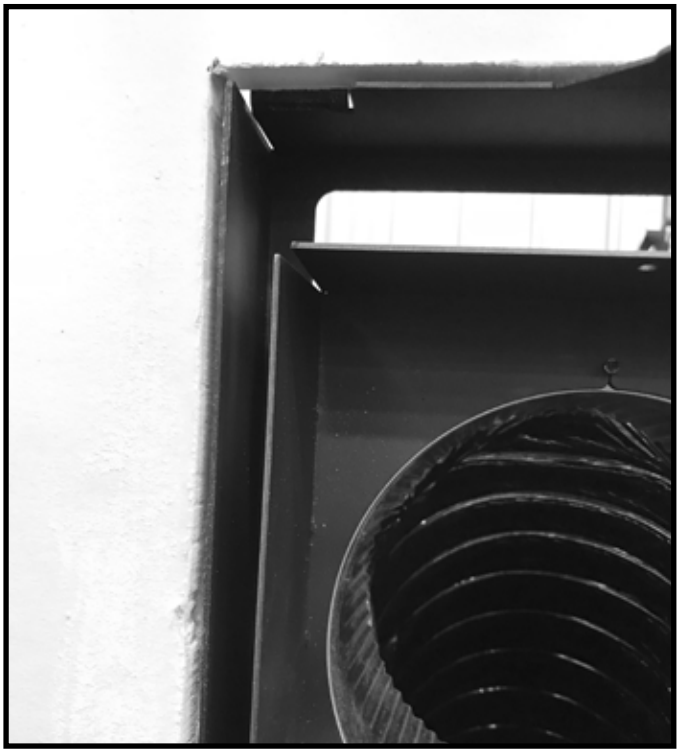

Figure 6.2 Finishing Edge

2. Bend over both register cover tabs. See Figure 6.3.

Note: It is permissible to paint the outer wrapping of the flex vent with black paint, if desired. See Figure 6.4.

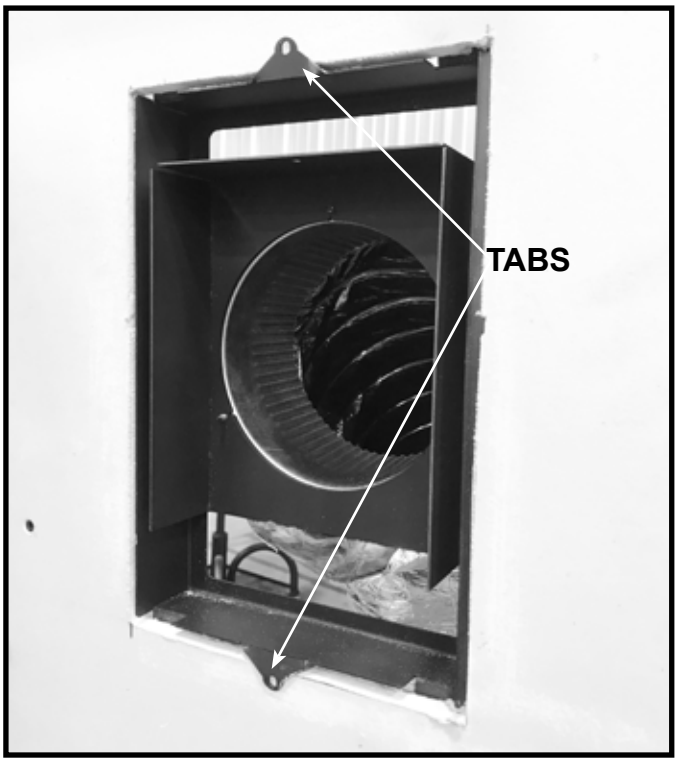

Figure 6.3 Bend Register Cover Tabs

Figure 6.4 Paint Outer Wrapping of Flex Vent (Optional)

3. Install register cover with louvers facing the front of the fireplace (control side) using provided screws. See Figure 6.5.

WARNING! Risk of Fire! *DO NOT block passive heat registers! Overheating of appliance and combustible materials will occur.*

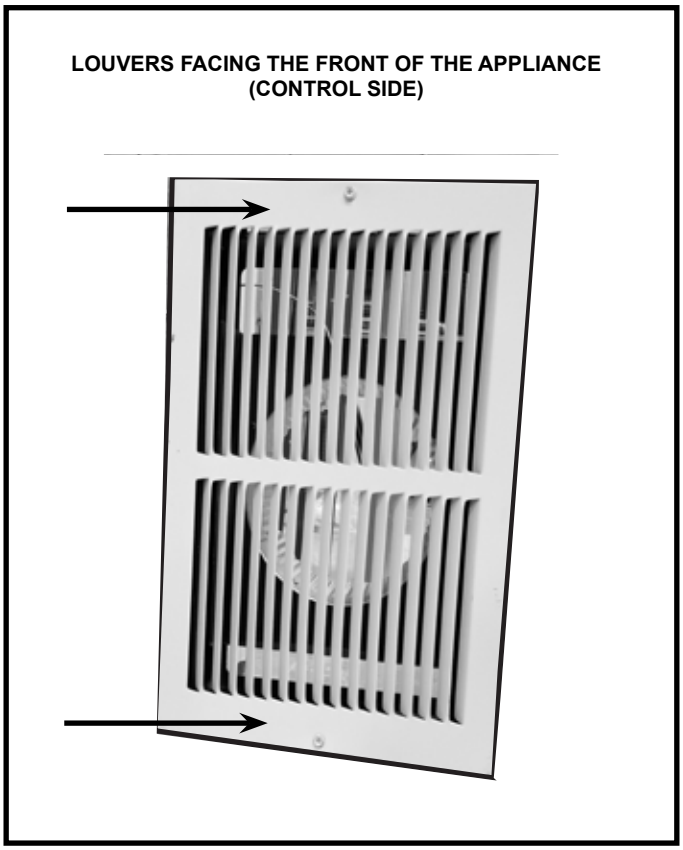

Figure 6.5 Correct Register Orientation

4. **Facing Material with Side Discharge Register Covers**

   The passive heat kit register covers are designed to be mounted directly to the drywall surface. Additional facing materials must not be placed behind the register covers. It is acceptable to place Non-Combustible facing materials up to the edge of the register covers. See Figure 6.6 and Figure 6.7. Consult the appliance Installation Manual to determine maximum facing material thickness.

5. Install the required register covers as instructed to complete the installation.

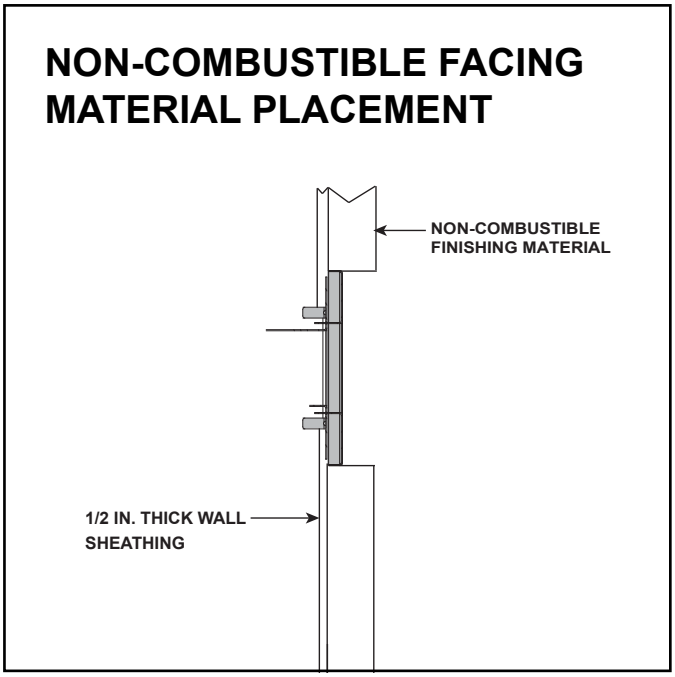

Figure 6.6 Finishing Material Installed

Painting

Side Discharge:

If desired finishing includes a painted register cover, Hearth & Home Technologies recommends using high temperature paint with a minimum of 300 °F (149 °C) continuous exposure rating.

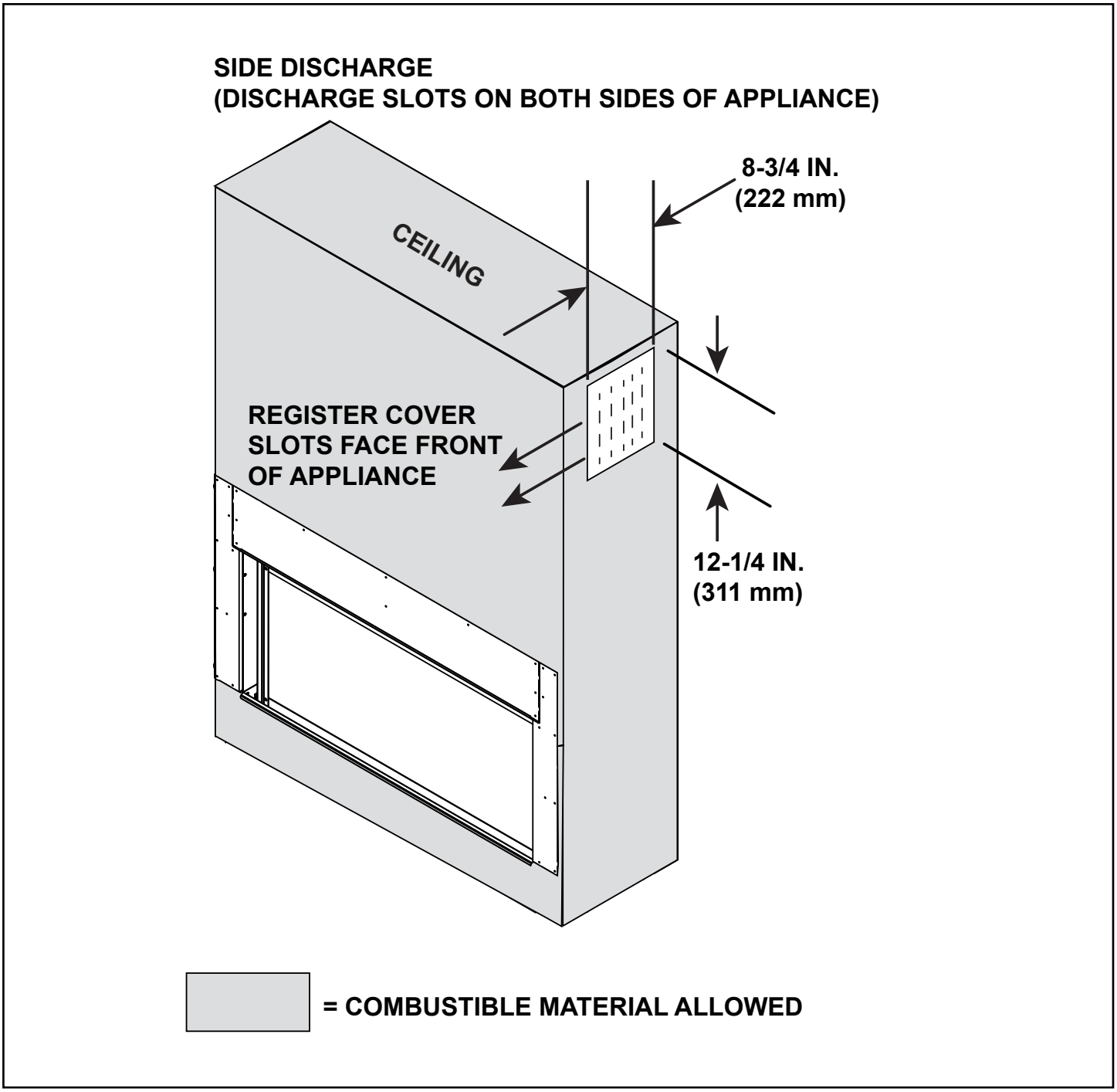

Figure 6.7 Finishing Material Installed

Please contact your Hearth & Home Technologies dealer with any questions or concerns.
For the location of your nearest Hearth & Home Technologies dealer,
please visit www.hearthnhome.com.

Hearth & Home Technologies
7571 215th Street West, Lakeville, MN 55044
www.hearthnhome.com