Service Parts

MARQ42IN-B

Marquis Rev B 42” Gas Fireplace - DV

Beginning Manufacturing Date: Mar 2019
Ending Manufacturing Date: Active

Log Set Assembly

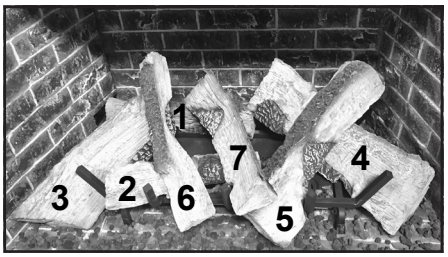

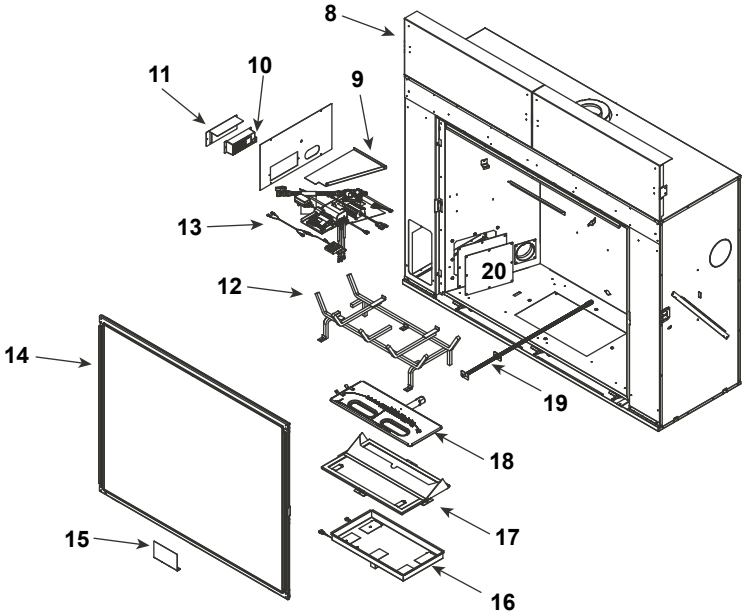

IMPORTANT: THIS IS DATED INFORMATION. Parts must be ordered from a dealer or distributor. **Hearth and Home Technologies does not sell directly to consumers**. Provide model number and serial number when requesting service parts from your dealer or distributor.

ITEM	DESCRIPTION	COMMENTS	PART NUMBER	Stocked at Depot
	Log Assembly		LOGSMQ42	**Y**
1	Log 1		SRV2271-701	
2	Log 2		SRV2271-703	
3	Log 3		SRV2271-702	
4	Log 4		SRV2271-704	
5	Log 5		SRV2271-706	
6	Log 6		SRV2271-705	
7	Log 7		SRV2271-707	
8	Heat Shield, Header	Qty 2 req	2281-105	
9	Heat Shield, Valve		2281-153	
10	Junction Box	Pre LC6668867	SRV4021-013	**Y**
		Post LC6668867	SRV2326-013	**Y**
11	J-Box Bracket		2281-154	
12	Grate Assembly		2271-015	
13	Valve Assembly		**Refer to Valve Page**	
14	Glass Assembly		GLA-2281	
15	Finishing Spacer		2281-113	
16	LED Tub Assembly		2281-017	
17	Inner Glass Frame Assembly		2281-019	
18	Burner Assembly		2271-007	**Y**
19	Orifice Bracket Flex		2012-008	**Y**
20	Access Plate		2281-117	

Additional service parts on following page.

Service Parts

MARQ42IN-B

Beginning Manufacturing Date: Mar 2019
Ending Manufacturing Date: Active

#13 Valve Assembly

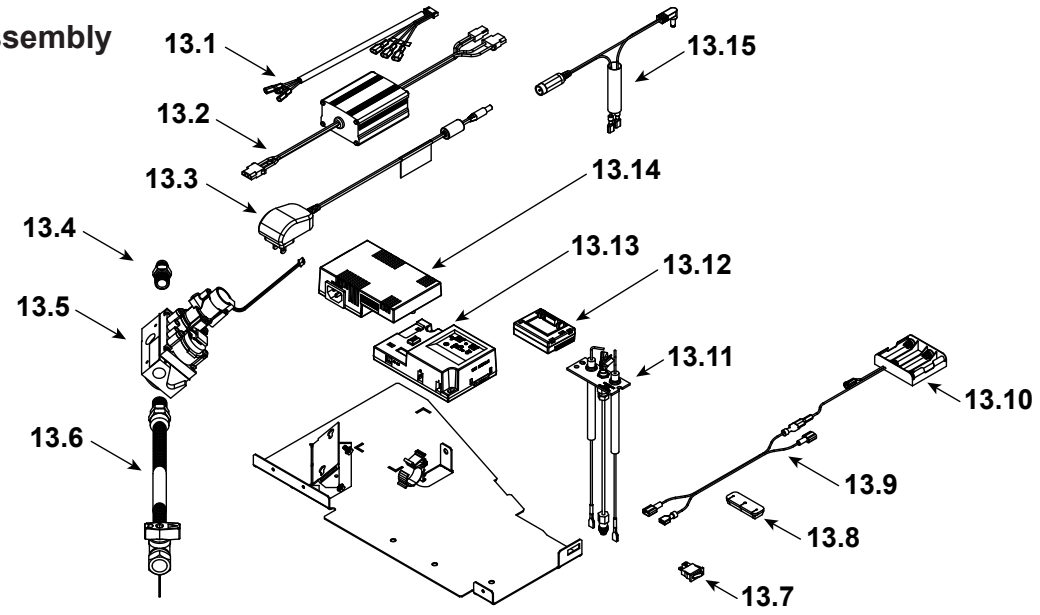

IMPORTANT: THIS IS DATED INFORMATION. Parts must be ordered from a dealer or distributor. **Hearth and Home Technologies does not sell directly to consumers**. Provide model number and serial number when requesting service parts from your dealer or distributor.

ITEM	DESCRIPTION	COMMENTS	PART NUMBER	Stocked at Depot
13.1	Wire Harness		SRV2326-132	Y
13.2	Led Controller		SRV2166-336	Y
13.3	Transformer, 6 Volt Wall		SRV2326-131	Y
13.4	Male connector	Pkg of 5	303-315/5	Y
13.5	Valve NG		SRV2166-302	Y
	Valve Propane		2166-303	Y
13.6	Flex Ball Valve Assembly. 12”		SRV302-320	Y
13.7	Reset Switch	Pre LC5114352	SRV2206-299	Y
		Post LC5114352 / Propane Only	SRV2206-298	Y
13.8	Grommet		SRV2118-420	
13.9	Wire, Battery jumps, 10 in		2281-196	Y
13.10	**Battery Pack		SRV2326-134	Y
13.11	Pilot Assembly, NG		2270-012	Y
13.12	Module, RF FCC		SRV2326-120	Y
13.13	Module, Control IFT		SRV2326-130	Y
13.14	Aux Module, B Type		SRV2326-150	Y
13.15	Reset Switch Wire	Propane Only	SRV2326-135	Y
	Cable, B Type AC Module		SRV2326-152	Y
	Orifice NG (#26C)		582-826	Y
	Orifice Propane (#45C)		SRV582-845	Y

**Fuse for battery pack can be sourced locally, not a warranty item. Specs are 250v, 3A fuse, 3/4” long

Beginning Manufacturing Date: Mar 2019
Ending Manufacturing Date: Active

#21 Tavern Brown Refractory

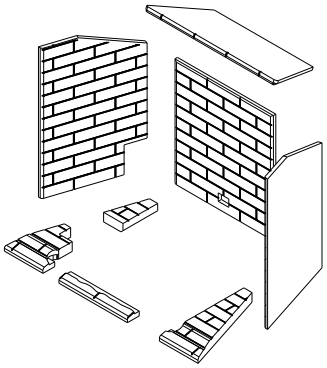

#22 Herringbone Refractory

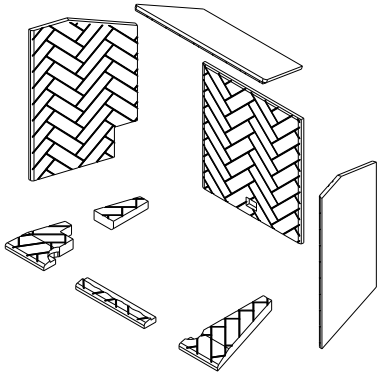

IMPORTANT: THIS IS DATED INFORMATION. Parts must be ordered from a dealer or distributor. **Hearth and Home Technologies does not sell directly to consumers**. Provide model number and serial number when requesting service parts from your dealer or distributor.

ITEM	DESCRIPTION	COMMENTS	PART NUMBER	Stocked at Depot
21	Refractory, Tavern Brown		BRICKMQ42TB-B	
22	Refractory, Herringbone		BRICKMQ42HB-B	

#23 Black Refractory

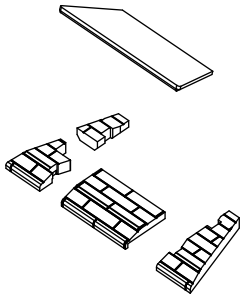

#24 Black Glass Refractory

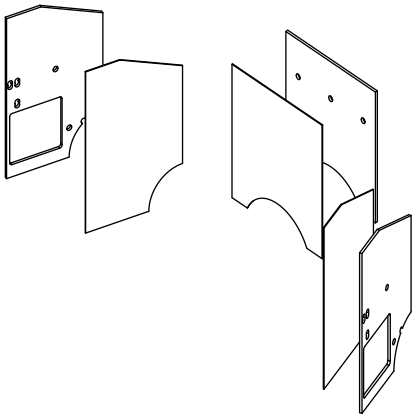

23	Refractory, Black	Base & Top	2615-053	
24	Black Glass Refractory	Sides & Back	GLMQ42	

Additional service parts on following page.

Service Parts

MARQ42IN-B

Beginning Manufacturing Date: Mar 2019
Ending Manufacturing Date: Active

IMPORTANT: THIS IS DATED INFORMATION. Parts must be ordered from a dealer or distributor. **Hearth and Home Technologies does not sell directly to consumers**. Provide model number and serial number when requesting service parts from your dealer or distributor.

ITEM	DESCRIPTION	COMMENTS	PART NUMBER	Stocked at Depot
	Air Shutter Tube Assembly		2052-157	
	Exhaust Restrictor		385-128	
	Gasket Assembly		SRV2281-080	
	Glass Clip Tool		2281-375	
	Glass Latch Assembly	Qty 2 req	2146-413	**Y**
	Glass Latch Assembly	Qty 4 req	2155-045	**Y**
	Kapton Lens, Light Orange	Qty 2 req	2166-171	**Y**
	Kapton Lens, Dark Orange	Qty 6 req	2166-184	**Y**
	Lava Rock		SRV4021-296	
	Mineral Wool		050-721	
	Non-Comb Assembly		2281-040	
	Nut 1/4-20 Hex Insert		SRV7000-236	
	Refractory Tab	Qty 2 req	2281-114	
	Relief Door Assembly		7011-011	
	Remote RC400		SRV2326-110	**Y**
	Screws	Pkg of 20	2300-275-20	**Y**
	Teco-Sil	5 lb. Bag	SRV700-790	
	Top Refractory Support		2281-190	
	Trim Strip, Sides		2281-366	
	Trim Strip, Top		2281-367	
	Finish Strip Template Assembly		SRV2281-330	
Conversion Kits				
	Conversion Kit NG		NGKMARQ42	**Y**
	Conversion Kit Propane		LPKMARQ42	**Y**
	Pilot Orifice NG		SRV593-528	**Y**
	Pilot Orifice Propane		SRV593-527	**Y**
	Regulator NG	w/stepper motor	NGK-DXV-50	**Y**
	Regulator Propane	w/stepper motor	SRVLPK-DXV-50	**Y**