Service Parts

MER36PL, MER36PN

Beginning Manufacturing Date: Jun 2023
Ending Manufacturing Date: Oct 2026

Meridian Platinum 36” Gas Fireplace - DV

Log Set Assembly

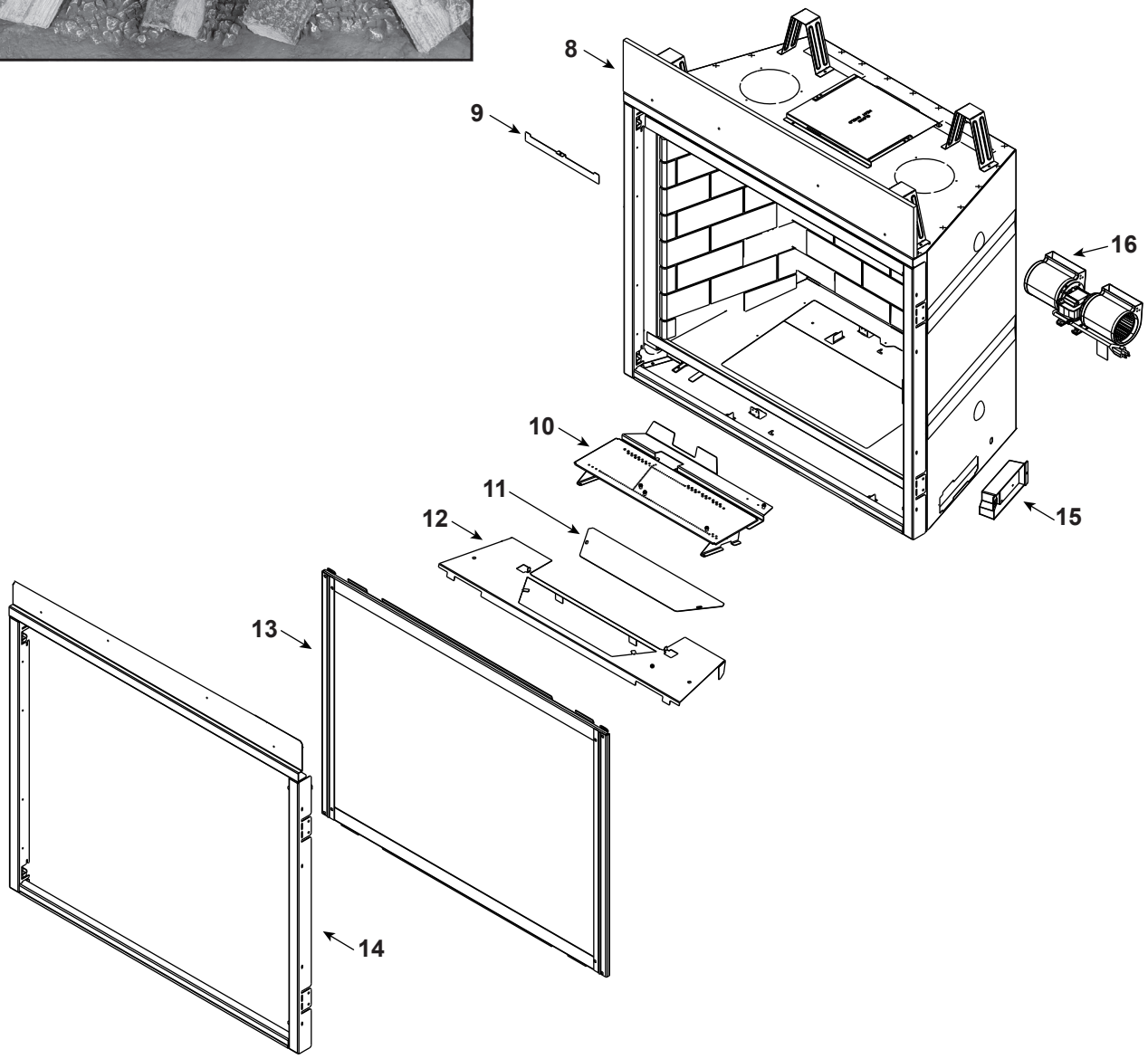

Part number list on following page.

Service Parts

MER36PL, MER36PN

Beginning Manufacturing Date: Jun 2023
Ending Manufacturing Date: Oct 2026

IMPORTANT: THIS IS DATED INFORMATION. Parts must be ordered from a dealer or distributor. **Hearth and Home Technologies does not sell directly to consumers**. Provide model number and serial number when requesting service parts from your dealer or distributor.

ITEM	DESCRIPTION	COMMENTS	PART NUMBER	Stocked at Depot
	Log Assembly		LOGSMER36	**Y**
1	Log #1		SRV2596-700	
2	Log #2		SRV2596-703	
3	Log #3		SRV2596-702	
4	Log #4		SRV2596-706	
5	Log #5		SRV2596-701	
6	Log #6		SRV2596-705	
7	Log #7		SRV2596-704	
8	Non-combustible board		2583-137	
9	Curtain, Flue Light		2583-179	
10	Burner Assembly		2596-007	**Y**
11	Mesh, Ember Bed		2583-157	
12	Basket, Ember Bed		2583-156	
	Glass Liner Kit (Back,Left, Right, Front Bases, Top, & Insulation Boards)		GL-36MX	
	Magic Glass Assembly (Back, Left, & Right)		2592-079	
	Brick Kit (Back, Left, Right, Front Bases & Top)	Castle Stone	BRICK36MPLCS	
		Tavern Brown Herring	BRICK36MPLTBH	
		Tavern Brown	BRICK36MPLTB	
13	Glass Assembly		GLA-6KL	**Y**
	Finishing Strips	Sold as set only	SRVFS-6K	
14	Surround		SRV2583-019	
	Surround Bottom		SRV2583-193-1	
15	Junction box		SRV2583-009	**Y**
16	Blower		GFK-160A	**Y**
	Elbow Heat Shield		385-290	
	Flue Restrictor		385-128	
	Gasket Assembly (Vent, seal cap, cover, drawn neck, shutter, valve, & bulkhead)		2583-080	
	Glass Clip Assembly (Top)	Qty 2 req	2155-047	**Y**
	Glass Clip Assembly (Bottom)	Qty 2 req	2155-045	**Y**
	Mineral Wool		050-721	
	Seal Cap	Qty 2 req	SRV4031-221	
	Illuminated Embers Glass Media	4lbs.	2680-753	

Additional service part numbers appear on following page.

Service Parts

MER36PL, MER36PN

Beginning Manufacturing Date: Jun 2023
Ending Manufacturing Date: Oct 2026

IMPORTANT: THIS IS DATED INFORMATION. Parts must be ordered from a dealer or distributor. **Hearth and Home Technologies does not sell directly to consumers**. Provide model number and serial number when requesting service parts from your dealer or distributor.

#17 Valve Assembly

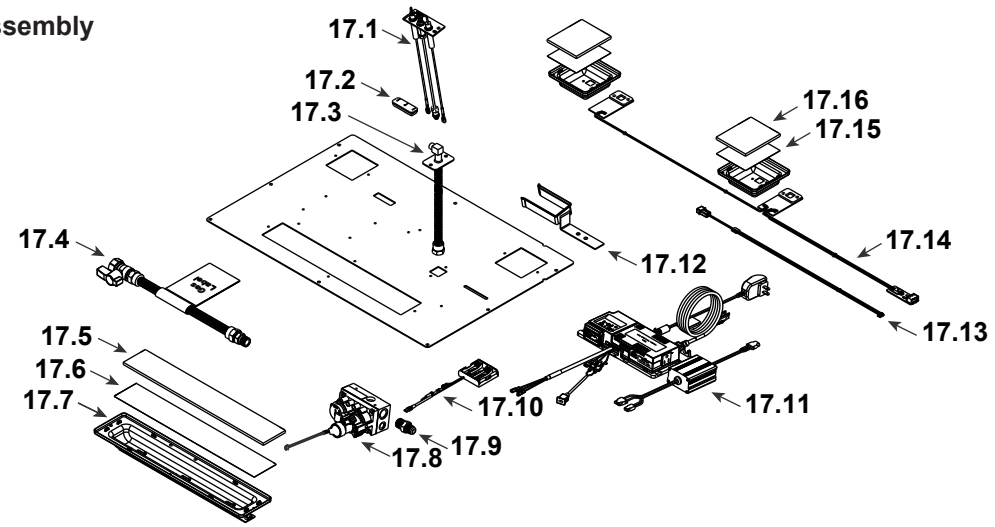

ITEM	DESCRIPTION	COMMENTS	PART NUMBER	Stocked at Depot
17.1	Pilot Assembly	NG	SRV2106-169	Y
		Propane	SRV2106-170	Y
	Pilot Tube		SRV485-301	Y
17.2	3-Hole Grommet		SRV2118-420	
17.3	Bulkhead W/Flex tube		SRV7000-156	Y
17.4	Flex Ball Valve Assembly		SRV303-330	Y
17.5	Glass, Ember		2583-173	
17.6	Kapton, Ember		2583-171	
17.7	LED Assembly, Ember Bed		2583-061	Y
17.8	Valve	NG	SRV2166-302	Y
		Propane	2166-303	Y
17.9	Male Connector	Pkg of 5	303-315/5	Y
17.10	Battery Holder**		SRV2326-142	Y
17.11	Component Tray Assembly		**See following page**	
17.12	Shutter Assembly		2583-011	
17.13	LED Wire		2589-160	Y
17.14	REB Accent Light		2583-236	Y
17.15	Kapton, Accent	Qty 2 req	2583-170	
17.16	Glass, Accent	Qty 2 req	2583-172	
	Orifice, NG (#31C)		SRV582-831	Y
	Orifice, Propane (#49C)		SRV582-849	Y

**Fuse for battery pack can be sourced locally, not a warranty item. Specs are 250v, 3A fuse, 3/4” long

Additional service part numbers appear on following page.

Service Parts

MER36PL, MER36PN

Beginning Manufacturing Date: Jun 2023
Ending Manufacturing Date: Oct 2026

IMPORTANT: THIS IS DATED INFORMATION. Parts must be ordered from a dealer or distributor. **Hearth and Home Technologies does not sell directly to consumers**. Provide model number and serial number when requesting service parts from your dealer or distributor.

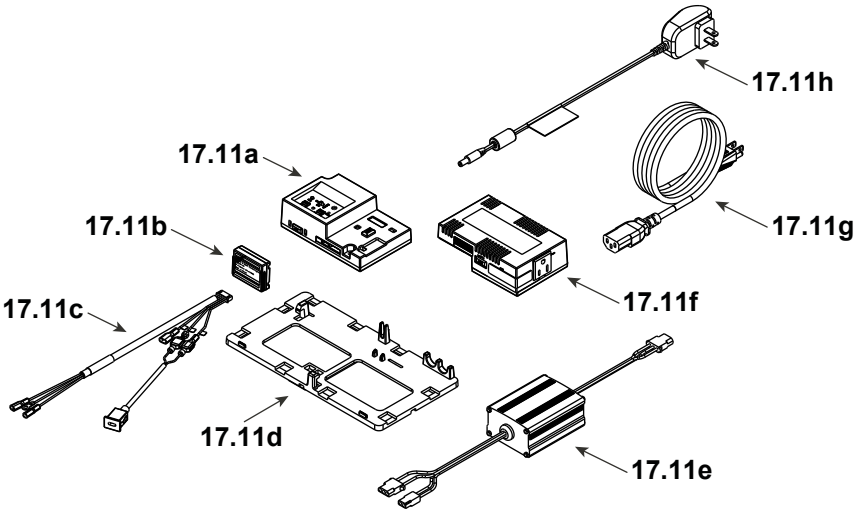

ITEM	DESCRIPTION	COMMENTS	PART NUMBER	Stocked at Depot
17.11a	Module, IFT Control		SRV2326-130	**Y**
17.11b	Module, RF FCC		SRV2326-120	**Y**
17.11c	Harness, IFT 6 Pin Wiring		SRV2583-063	**Y**
17.11d	Component Tray		2279-185	
17.11e	LED Controller		SRV2166-336	**Y**
17.11f	Module, B Type AC		SRV2326-150	**Y**
17.11g	Cable, B Type AC Module		SRV2326-152	**Y**
17.11h	Transformer, 6 Volt Wall		SRV2326-131	**Y**
	RC400 Remote		SRV2326-110	**Y**
	Touch Up Paint		TUP-GBK-12	
Conversion Kits				
	Conversion Kit NG		NGK-MID	**Y**
	Conversion Kit Propane		LPK-MID	**Y**
	Pilot Orifice, NG		SRV593-528	**Y**
	Pilot Orifice, Propane		SRV593-527	**Y**
	Regulator, NG		NGK-DXV-50	**Y**
	Regulator, Propane		SRVLPK-DXV-50	**Y**