Installation Manual

Installation and Fireplace Setup

INSTALLER: Leave this manual with party responsible for use and operation.
OWNER: Retain this manual for future reference.

This fireplace uses SL300 Series Chimney
2" CLEARANCE TO COMBUSTIBLES AND BUILDING INSULATION FROM CHIMNEY REQUIRED.

***NOTICE: DO NOT** discard this manual!*

MAJESTIC

Model(s):
BE36
BE42

C UL US LISTED

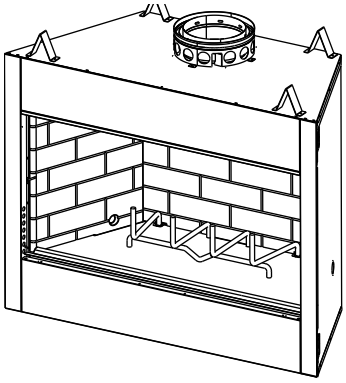

WOODBURNING FIREPLACE

Installation and service of this appliance should be performed by qualified personnel. Hearth & Home Technologies recomends HHT Factory Trained or NFI certified professionals.

hearthED FACTORY TRAINING Fuel Your Fire

NFI NATIONAL FIREPLACE INSTITUTE® A CERTIFICATION AGENCY

⚠ WARNING: If the information in these instructions is not followed exactly, a fire or explosion may result causing property damage, personal injury, or death.

- **DO NOT** store or use gasoline or other flammable vapors and liquids in the vicinity of this or any other appliance.
- **DO NOT** overfire. Overfiring will void your warranty.
- Comply with all minimum clearances to combustibles as specified. Failure to comply may cause house fire.

⚠ WARNING

HOT SURFACES!
Glass and other surfaces are hot during operation AND cool down.

Hot glass will cause burns.
- **DO NOT** touch glass until it is cooled
- NEVER allow children to touch glass
- Keep children away

- CAREFULLY SUPERVISE children in same room as fireplace.
- Alert children and adults to hazards of high temperatures.

High temperatures may ignite clothing or other flammable materials.
- Keep clothing, furniture, draperies and other flammable materials away.

⚠ WARNING

Fire Risk.

For use with solid wood fuel only.
Other fuels may overfire and generate poisonous gases (i.e. carbon monoxide).

Safety Alert Key:

- ***DANGER!*** Indicates a hazardous situation which, if not avoided will result in death or serious injury.
- ***WARNING!*** Indicates a hazardous situation which, if not avoided could result in death or serious injury.
- ***CAUTION!*** Indicates a hazardous situation which, if not avoided, could result in minor or moderate injury.
- ***NOTICE:*** Indicates practices which may cause damage to the fireplace or to property.

Table of Contents

1 Product Specific & Important Safety Information
- A. Fireplace Certification 4
- B. Non-Combustible Materials 4
- C. Combustible Materials 4

2 Getting Started
- A. Typical Fireplace System 5
- B. Design and Installation Considerations 6
  - 1. Selecting Fireplace Locations 6
  - 2. Locating Fireplace & Chimney 7
- C. Tools and Supplies Needed 8
- D. Inspect Fireplace and Components 8
- E. Fireplace System Requirements 8

3 Framing and Clearances
- A. Appliance Dimensions/Weights 9
- B. Clearances 10
  - Minimum Clearances to Combustibles 10
- C. Construct the Chase 11
- ▶ D. Frame the Fireplace 12
- E. Secure and Level the Fireplace 12
- F. Protective Metal Hearth Strips 13
- G. Outside Air Kit (optional) 14

4 Chimney and Termination Requirements
- A. Chimney Requirements 15
- B. Offsets/Returns 16
- C. Termination Requirements 17

5 Chimney Installation
- A. Typical Chimney System 18
- B. Assemble Chimney Sections 19
- C. Install Chimney Air Kit 19
- D. Secure Offset/Return 20
- E. Install Ceiling Firestops 20
- F. Install Attic Insulation Shield 21
- G. Roof Penetration 22
- H. Install Chase/Chase Top 22
- I. Termination Cap Requirements 23
- J. Install Termination Cap 23

6 Shrouds
- A. Radiation Shield 25
- B. Field Constructed Shrouds 25
  - 1. Open Top Shroud 25
  - 2. Mailbox Style Shroud 26
  - 3. Roofed Style Shroud 26

7 Finishing
- A. Finishing Material 27
- B. Hearth Extension, Building and Finishing 28
  - 1. Hearth Extension 4” or more below Fireplace Opening 29
  - 2. Raised Hearth Extension Less Than 4” Below Fireplace Opening 29
  - 3. Fireplace Opening and Hearth Extension Flush with Floor 30
- C. Non-Combustible Sealant Material 30
- D. Mantel and Wall Projections 31
- E. Sidewalls/Surrounds 32

8 Fireplace Setup
- A. Gas Log/Lighter Provision 33

9 Reference Materials
- A. Chimney Components 34
- B. Optional Components 38

ATTENTION INSTALLER:

Follow this Standard Work Checklist

This standard work checklist is to be used by the installer in conjunction with, not instead of, the instructions contained inhis installation manual.

Customer:	_____	**Date Installed:**	_____
Lot/Address	_____	**Location of Fireplace:**	_____
	_____	**Installer:**	_____
Model (circle one):	BE36	**Dealer/Distributor Phone #**	_____
	BE42	**Serial #:**	_____

WARNING! Risk of Fire or Explosion! *Failure to install fireplace acording to these instructions can lead to a fire or explosion.*

Fireplace Install	**YES**	**IF NO, WHY?**
Verified that the chase is insulated and sealed. (Pg. 11)	☐	_____
Verified clearances to combustibles. (Pg. 10)	☐	_____
Fireplace is leveled and secured. (Pg. 12)	☐	_____
Protective hearth strips installed per manual requirements. (Pg. 13)	☐	_____
Hearth extension size/height decided. (Pg. 28)	☐	_____
Outside air kit installed. (Pg 14)	☐	_____
Chimney Section 4 & 5 (Pg. 15)		
Chimney configuration complies with diagrams.	☐	_____
Chimney installed, locked and secured in place with proper clearance.	☐	_____
Chimney air kit installed.	☐	_____
Firestops installed.	☐	_____
Attic insulation shield installed.	☐	_____
Roof flashing installed.	☐	_____
Termination installed.	☐	_____
Shrouds Section 6 (Pg. 25)		
Shroud is installed properly per instructions.	☐	_____
Finishing Section 7 (Pg. 27)		
Combustible materials not installed in non-combustible areas.	☐	_____
Verified all clearances meet installation manual requirements.	☐	_____
Mantels and wall projections comply with installation manual requirements.	☐	_____
Hearth extension installed per manual requirements.	☐	_____
Fireplace Setup Section 8 (Pg. 34)		
All packaging and protective materials removed.	☐	_____
Refractory installed correctly.	☐	_____
Grate is properly installed.	☐	_____
Firescreen properly installed.	☐	_____
Optional doors properly installed.	☐	_____
Manual bag and all of its contents are removed from the fireplace and given to the party responsible for use and operation.	☐	_____

Hearth & Home Technologies recommends the following:

- Photographing the installation and copying this checklist for your file.
- That this checklist remain visible at all times on the fireplace until the installation is complete.

Comments: Further description of the issues, who is responsible (Installer/Builder/Other Trades, etc.) and corrective action needed:

_____

_____

_____

Comments communicated to party responsible _____ by _____on _____

(Builder/Gen. Contractor) (Installer) (Date)

4044-199 • Rev B • 3-17-16

1 Product Specific & Important Safety Information

A. Fireplace Certification

This fireplace system has been tested and listed in accordance with UL 127 and ULC-S610 standards by Underwriters Laboratories Inc. for installation and operation in the United States and Canada.

This fireplace may be installed in sleeping rooms EXCEPT in manufactured homes. If installed with a gas log set, provisions for the National Fuel Gas Code must be met.

This fireplace has been tested and listed for use with the optional components specified in this manual. These optional components may be purchased separately and installed at a later date. An outside air kit, gas insert, gas log set or gas log-lighter should be installed at the time of fireplace installation.

WARNING! Risk of Fire! *Hearth & Home Technologies disclaims any responsibility for, and the warranty and agency listing will be voided by the following actions.*

DO NOT:

- *install or operate damaged fireplace*
- *modify fireplace*
- *install other than as instructed by Hearth & Home Technologies*
- *operate the fireplace without fully assembling all components*
- *overfire*
- *install unvented gas log set*
- *install any component not approved by Hearth & Home Technologies*
- *install parts or components not Listed or approved*

Improper installation, adjustment, alteration, service or maintenance can cause injury or property damage. For assistance or additional information, consult a qualified installer, service agency or your dealer.

⚠ WARNING: This product and the fuels used to operate this product (wood and wood pellets), and the products of combustion of such fuels, can expose you to chemicals including carbon black, which is known to the State of California to cause cancer and carbon monoxide, which is known to the State of California to cause birth defects or other reproductive harm. For more information go to: www.P65Warnings.ca.gov.

B. Non-Combustible Materials

- Materials which will not ignite and burn, composed of any combination of the following:
  - Steel
  - Iron
  - Brick
  - Tile
  - Concrete
  - Slate
  - Glass
  - Plasters
- Materials reported as passing **ASTM E 136, Standard Test Method for Behavior of Metals, in a Vertical Tube Furnace at 750° C**

C. Combustible Materials

- Materials made of or surfaced with any of the following materials:
  - Wood
  - Compressed paper
  - Plant fibers
  - Plastic
  - Plywood/OSB
  - Sheet rock (drywall)
- Any material that can ignite and burn; flame proofed or not, plastered or un-plastered

2 Getting Started

A. Typical Fireplace System

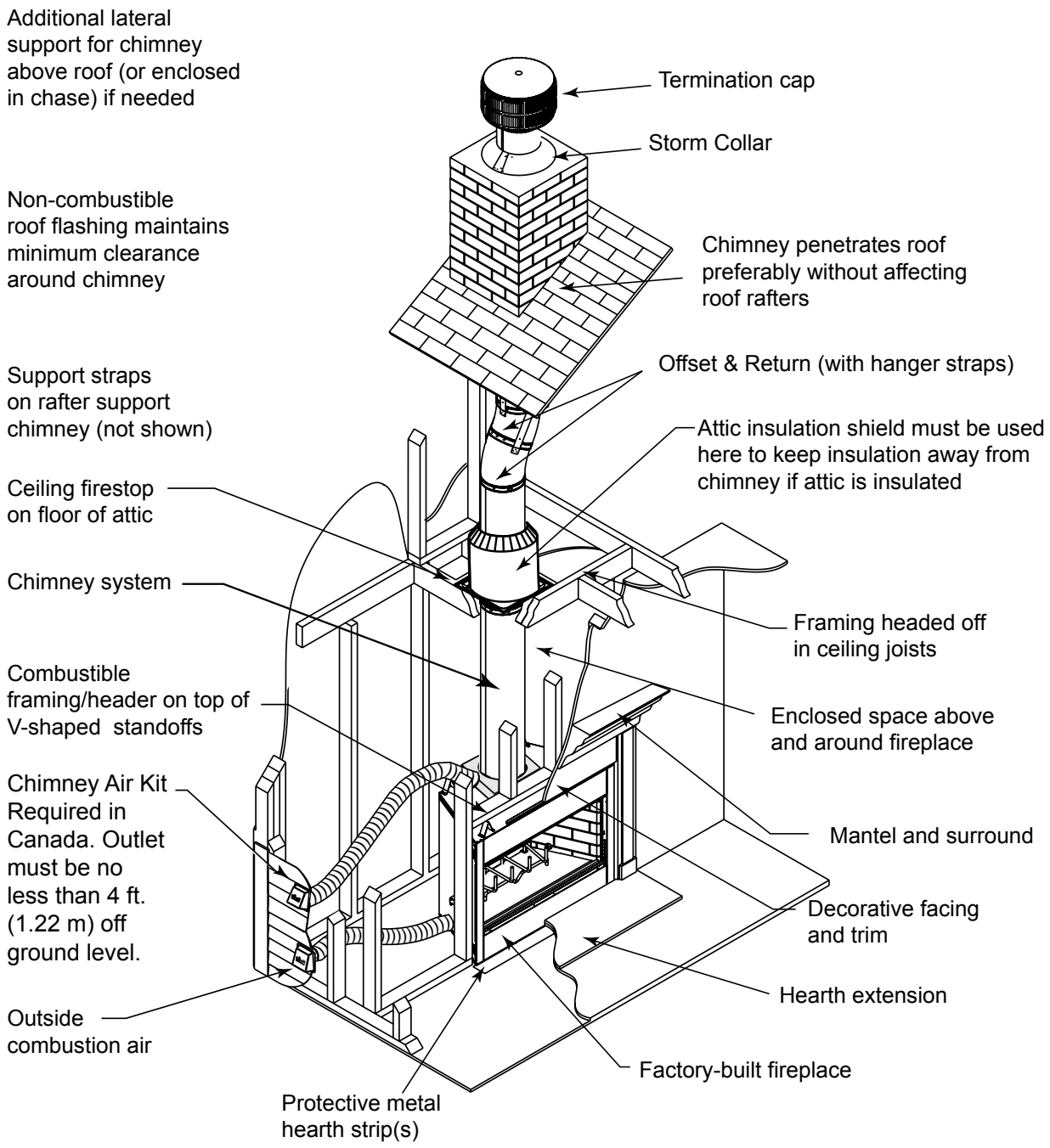

Figure 2.1 Typical Fireplace System

B. Design and Installation Considerations

***NOTICE:** Check building codes prior to installation.*

- Installation MUST comply with local, regional, state and national codes and regulations.
- Consult insurance carrier, local building inspector, fire officials or authorities having jurisdiction over restrictions, installation inspection and permits.
- **Before installing**, determine the following:
  - Where the fireplace is to be installed.
  - The vent system configuration to be used.
  - Gas supply piping.
  - Electrical wiring.
  - Framing and finishing details.

    Note: A raised hearth extension built flush with the fireplace opening or less than 4 in. (102 mm) below the fireplace opening requires the fireplace be installed on a non-combustible surface.
  - Whether optional accessories - devices such as a fan, wall switch or remote control - are desired.

1. Selecting Fireplace Locations

This fireplace may be used as a room divider, installed along a wall, across a corner or used in an exterior chase. See Figure 2.2.

Locating the fireplace in a basement should be avoided. Locating near frequently opened doors, central heat outlets or returns, or other locations of considerable air movement can affect the performance.

Consideration should be given to these factors before deciding on a location.

***NOTICE:** In addition to these framing dimensions, also reference the following section:*

- *Clearances (Section 3).*

NOTICE:

- *Illustrations and photos reflect typical installations and are FOR DESIGN PURPOSES ONLY.*
- *Illustrations/diagrams are not drawn to scale.*
- *Actual installation/appearance may vary due to individual design preference.*
- *Hearth & Home Technologies reserves the right to alter its products.*

NOTICE:
A minimum 1/2 in. air clearance at the back and sides of the fireplace assembly must be maintained.

Chimney sections at any level require a 2 in. minimum air space clearance between the framing and chimney sections.

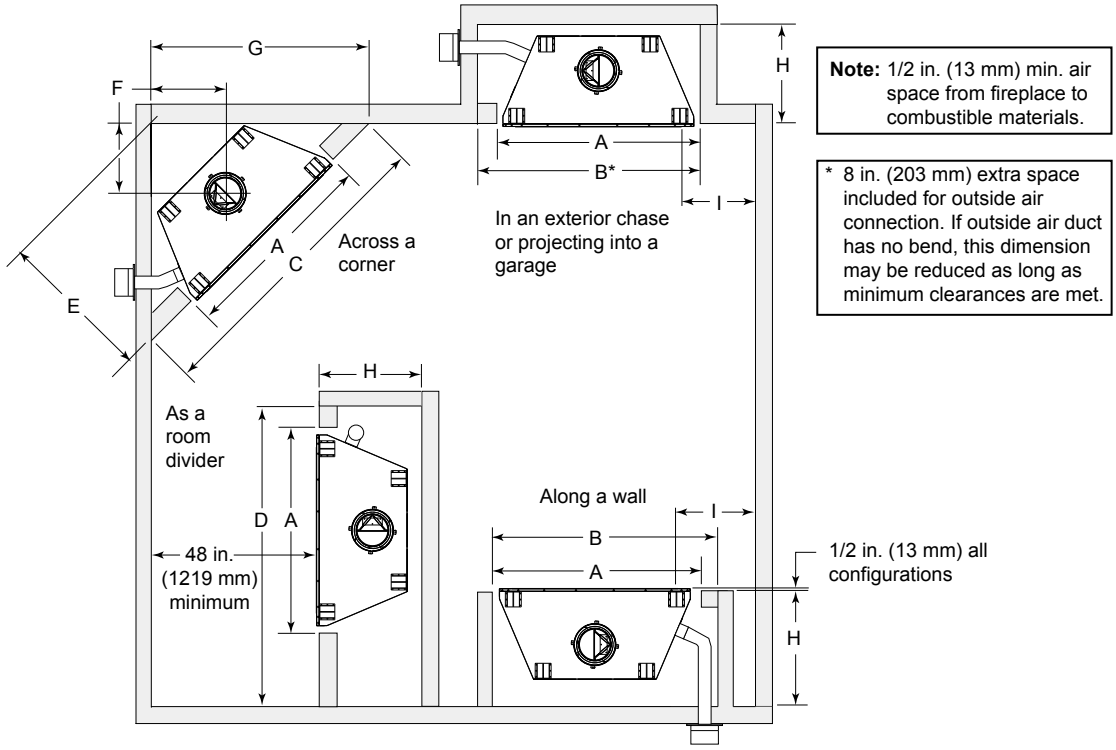

***Note:** Measurements are FRAMING dimensions only and do not include drywall either in the cavity or on the interior walls.*

Model		A	B	C	D	E	F	G	H	I
BE-36	*inches*	42	50	67 7/8	59 1/2	34	14	48	21 1/2	12 in. (305 mm) Minimum from FP opening to any perpendicular wall.
	mm	1067	1270	1724	1511	864	356	1219	546	
BE-42	*inches*	48	56	73 7/8	65 1/2	37 1/4	17	52 1/4	21 1/2	
	mm	1219	1422	1876	1664	946	432	1327	546	

Figure 2.2 Fireplace Locations

2. Locating Fireplace & Chimney

Location of the fireplace and chimney will affect performance.

- Install within the warm airspace enclosed by the building envelope. This helps to produce more draft, especially during lighting and die-down of the fire.
- Installing the fireplace in a basement is not recommended.
- Penetrate the highest part of the roof. This minimizes the effects of wind loading.
- Locate termination cap away from trees, adjacent structures, uneven roof lines and other obstructions.
- Minimize the use of chimney offsets.
- Consider the fireplace location relative to floor and ceiling and attic joists.
- Take into consideration the termination requirements in Sections 4 and 5.
- Install the outside air kit with the intake facing prevailing winds during the heating season.
- Ensure adequate outdoor air for <u>all</u> combustion appliances and exhaust equipment.
- Ensure furnace and air conditioning return vents are not located in the immediate vicinity of the fireplace.
- Avoid installing the fireplace near doors, walkways or small isolated spaces.
- Recessed lighting should be a “sealed can” design.
- Attic hatches weather stripped or sealed.
- Attic mounted duct work and air handler joints and seams taped or sealed.

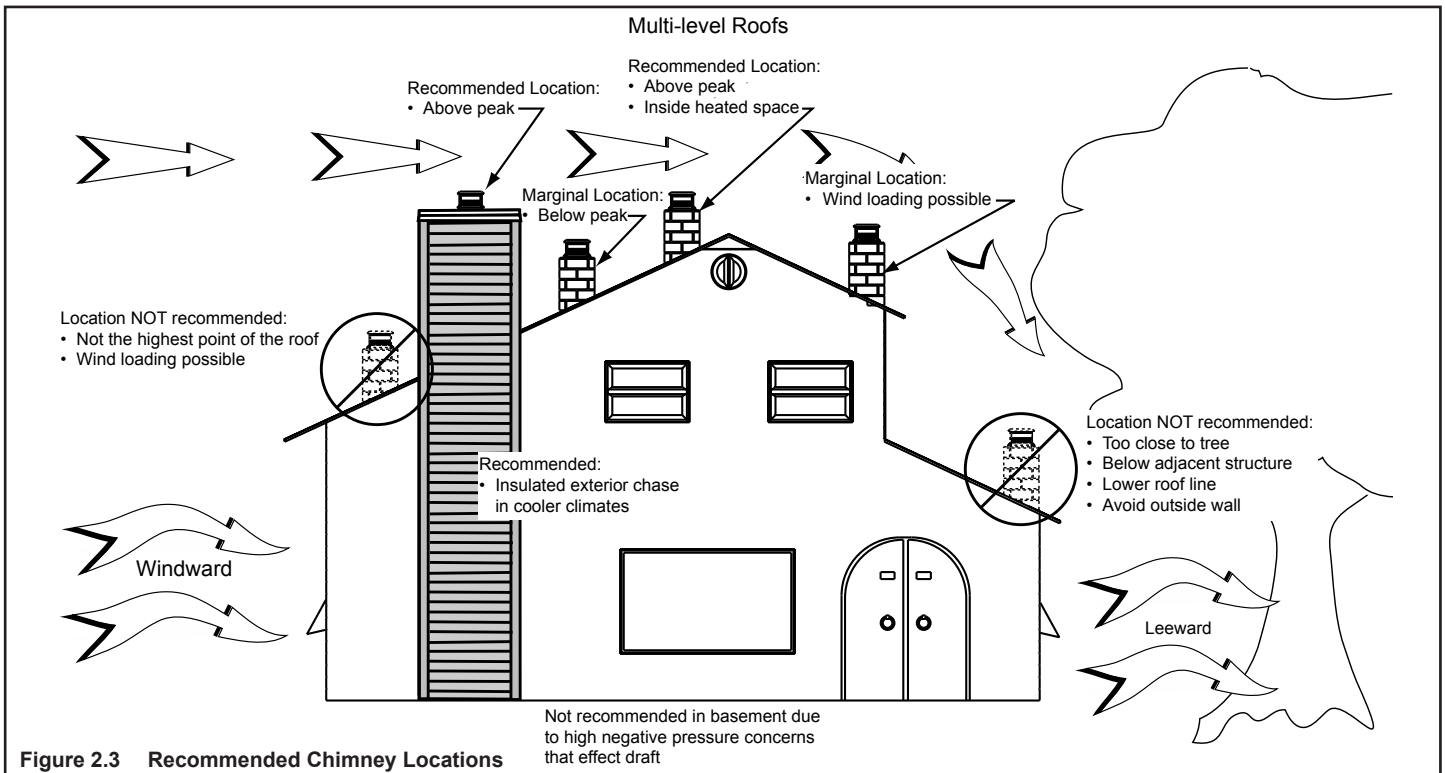

Figure 2.3 Recommended Chimney Locations

C. Tools and Supplies Needed

Before beginning the installation be sure the following tools and building supplies are available:

Reciprocating saw	Framing material
Pliers	Non-combustible sealant
Hammer	Gloves
Phillips screwdriver	Framing square
Flat blade screwdriver	Electric drill and bits
Plumb line	Safety glasses
Level	Tape measure

1/2-3/4 in. length, #6 or #8 self-drilling screws

Misc. screws and nails

D. Inspect Fireplace and Components

WARNING! Risk of Fire and/or Explosion! *Damaged parts could impair safe operation.* ***DO NOT*** *install damaged, incomplete or substitute components. Keep fireplace dry.*

- Remove fireplace and components from packaging and inspect for damage.
- Vent system components and doors are shipped in separate packages.
- Report to your dealer any parts damaged in shipment.
- **Read all the instructions before starting the installation. Follow these instructions carefully during the installation to ensure maximum safety and benefit.**

E. Fireplace System Requirements

The HHT fireplace system requirements consist of the following:

- Fireplace
  - Refractory (included with fireplace)
  - Firescreen (included with fireplace)
  - Grate (included with fireplace)
  - Hearth Extension (required, sold separately)
- Outside Air System (optional)
  - Air Inlet Hood
  - Flex
- Chimney System
  - Attic Insulation Shield (included with fireplace)
  - Chimney air kit (required in Canada, sold separately)
  - Chimney termination cap (required, sold separately)
- Non-combustible finish material

3 Framing and Clearances

A. Appliance Dimensions/Weight

Appliance Weight Table

Model	Pounds
BE36	161
BE42	175

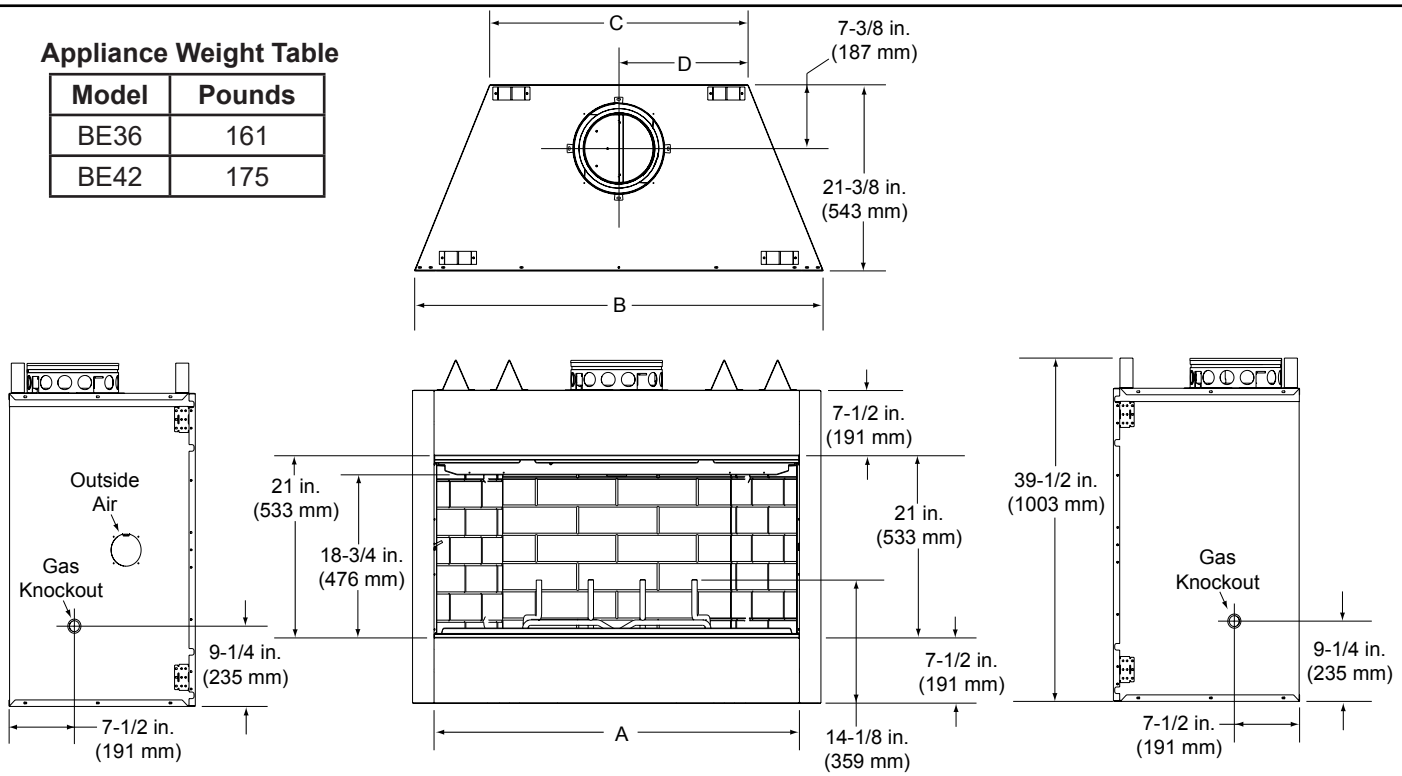

Model #		A	B	C	D
BE-36	*in.*	36	41	23-3/4	11-7/8
	mm	914	1041	603	302
BE-42	*in.*	42	47	29-3/4	14-7/8
	mm	1067	1194	756	378

Figure 3.1 Appliance Dimensions

B. Clearances

WARNING! Risk of Fire!

You must comply with all minimum air space clearances to combustibles as specified in Figure 3.2. ***DO NOT*** *pack required air spaces with insulation or other materials. Framing or finishing material used on the front of, or in front of, the fireplace closer than the minimums listed must be constructed entirely of non-combustible materials (i.e., steel studs, concrete board, etc.). Failure to comply may cause fire.*

Minimum Clearances to Combustibles

WITHIN ENCLOSURE AREA	
Fireplace to backwall	1/2 in. (13 mm)
Fireplace to sidewall	1/2 in. (13 mm)
Top standoffs to header	0 in. (0 mm)
Door opening to sidewall	12 in. (305 mm)
MANTEL	
Mantel minimum height	12 in. (305 mm) above opening
Maximum mantel depth	12 in. (305 mm)

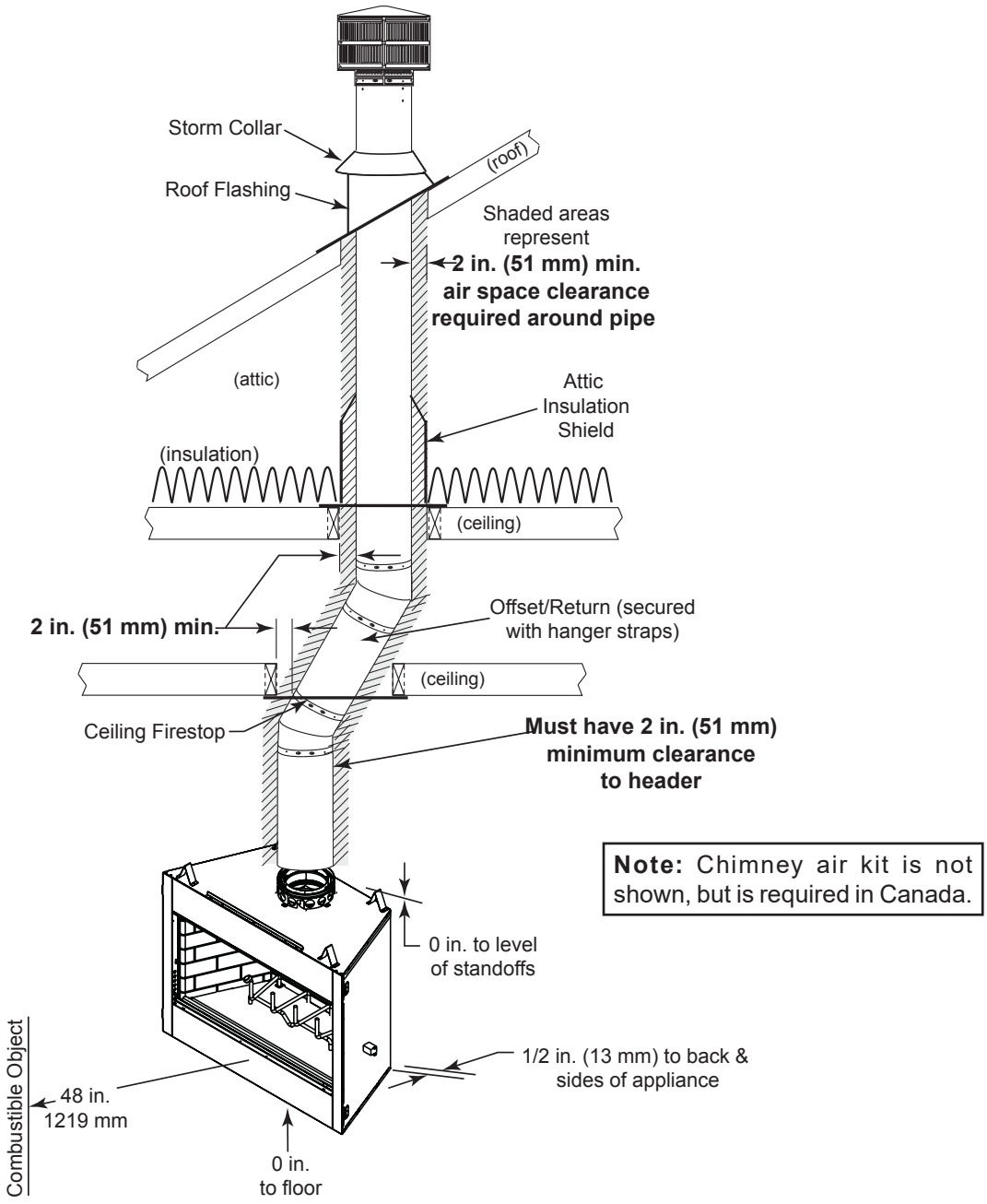

Figure 3.2 Clearances to Combustible Materials

C. Construct the Chase

A chase is a vertical boxlike structure built to enclose the fireplace and/or its vent system. Vertical chimneys that run on the outside of a building must be installed inside a chase.

In cold climates, Hearth & Home Technologies recommends that the chase be well insulated using batt type insulation between the joists.

Construction of the chase may vary with the type of building. These instructions are not substitutes for the requirements of local building codes. Local building codes MUST be checked.

Chases should be constructed in the manner of all outside walls of the home to prevent cold air drafting problems. The chase should not break the outside building envelope in any manner. All outer walls need to be insulated.

Building codes require false ceiling and ceiling firestops/attic shields at each floor of the chase or every 10 ft (3048 mm) of clear space to control spread of fire.

Walls, ceiling, base plate and cantilever floor at the first level of the chase should be insulated (see Figure 3.3.) Vapor and air infiltration barriers should be installed in the chase as per regional codes for the rest of the home. Additionally, Hearth & Home Technologies recommends that the inside surfaces be drywalled and taped (or the use of an equivalent method) for maximum air tightness.

Holes and other openings should be caulked with high temperature caulk or stuffed with unfaced fiberglass insulation.

WARNING! You must install false ceilings and ceiling firestops at each floor of the chase or every 10 ft (3.05 m) to control spread of fire.

WARNING! Risk of Fire! DO NOT *seal area between fire stop opening and chimney pipe except where they enter the attic or leave the warm air envelope of the home (use 600° F sealant).*

- The chase is constructed using framing materials much the same as the walls in your home. A variety of siding materials may be used including brick, stone, veneer brick, or standard siding materials.
- In constructing the chase, several factors must be considered:
  - **Maintain a 2 in. (51 mm) air space around the chimney.**
  - The chase top must be constructed of non-combustible material.
  - In cold climates, a firestop spacer and attic insulation shield should be installed in an insulated false ceiling at the 8 ft. (2438 mm) level above the fireplace assembly. This reduces heat loss through the chase.
  - In cold climates, the walls of the chase should be insulated to the level of the false ceiling as shown in Figure 3.3. This will help reduce heat loss from the home around the fireplace.

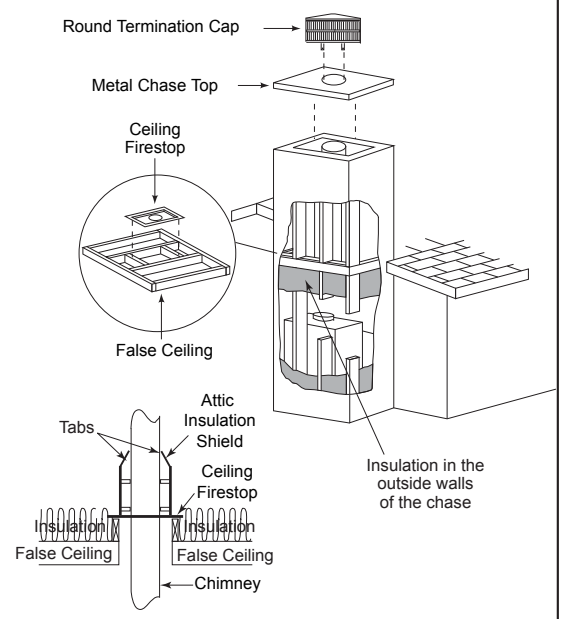

Figure 3.3 Chase Assembly

WARNING! Risk of Fire! **You must maintain a minimum 2 in. (51 mm) air space clearance to insulation and other materials surrounding the chimney system.**

- *Insulation and other materials must be firmly secured to prevent accidental contact with chimney system.*
- *The chase must be properly blocked to prevent blown insulation or other combustibles from entering and making contact with fireplace or chimney.*
- *Failure to prevent contact between insulation or other materials and chimney system may cause overheating and fire.*

Three examples of chase applications are shown in Figure 3.4.

1. Fireplace and chimney enclosed in an exterior chase.
2. Chimney offset through exterior wall and enclosed in chase.
3. Chase constructed on roof.

Note: In cooler climates, all chase walls should be insulated.

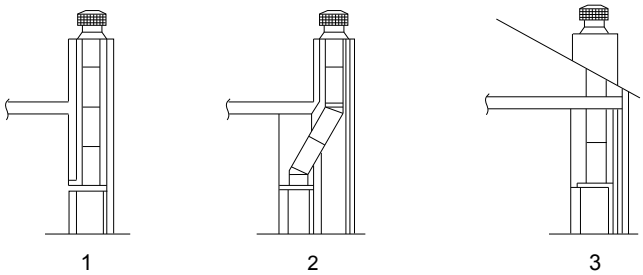

Figure 3.4 Chase Constructions

D. Frame the Fireplace

NOTICE: Hearth extension design must be determined before installation of fireplace.

If the fireplace is placed on the floor the maximum height of a finished raised hearth is 7-1/2". If you want a higher raised hearth the fireplace must be placed on a platform.

WARNING! Risk of Fire. *A raised hearth extension built flush with the fireplace opening or less than 4 in. (102 mm) below the fireplace opening requires the fireplace be installed on a non-combustible surface.*

WARNING! Risk of Fire! *Comply with all minimum clearances specified.*

- *A minimum 1/2 in. (13 mm) air clearance must be maintained at the back and sides of the fireplace assembly.*
- **Chimney sections at any level require a 2 in. (51 mm) minimum air space clearance between the framing and chimney section.**

WARNING! Risk of Fire! *You must comply with all minimum air space clearances to combustibles.* ***DO NOT*** *pack required air spaces with insulation or other materials.*

Figure 3.5 shows a typical framing (using 2 x 4 lumber) of the fireplace, assuming combustible materials are used. All required clearances to combustibles around the fireplace must be adhered to. See Figure 3.2. Any framing across the top of the fireplace must be above the level of the top standoffs.

The finished cavity depth must be no less than 21-1/2 in. (546 mm) from the finished backwall to the outside of front wall framing.

CAUTION! *Risk of Cuts/Abrasions. Wear protective gloves and safety glasses during installation. Sheet metal edges are sharp.*

NOTE: Before framing up the chase, consider where and how the chimney will run. If there are obstacles that might be in the way, it may be necessary to make the chase larger than shown to allow for offsets to be used. Refer to offset chart on page 16 if needed.

E. Secure and Level the Fireplace

This fireplace may be placed on either a combustible or noncombustible continuous flat surface. Follow the instructions for framing in Section 3. Slide the fireplace into position. Be sure to provide the minimum 1/2 in. air clearance at the sides and back of the fireplace.

The fireplace should be positioned so the face of the noncombustible material on the fireplace will be flush with the face of the drywall on the walls.

Level the fireplace and shim as necessary.

WARNING! Risk of Fire! *Prevent contact with sagging, loose insulation.*

- ***DO NOT*** *install against vapor barriers or exposed insulation.*
- *Secure insulation and vapor barriers.*
- *Provide minimum air space clearances at the sides and back of the fireplace assembly.*

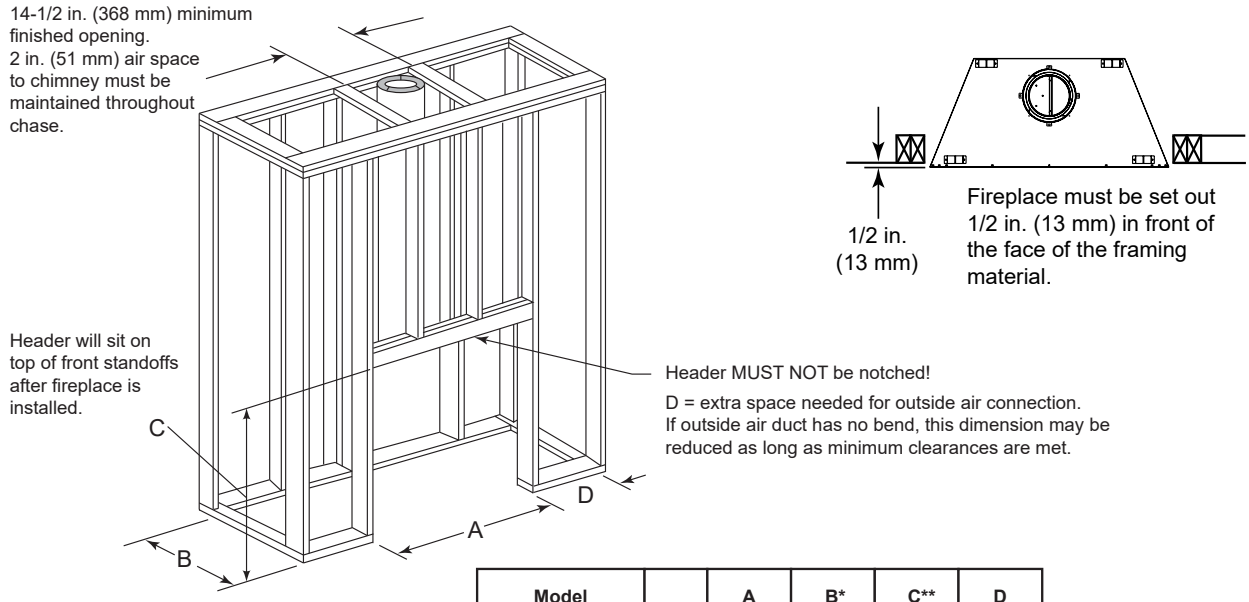

Model		A	B*	C**	D
BE36	in.	42	21-1/2	39-3/4	8
	mm	1067	546	1010	203
BE42	in.	48	21-1/2	39-3/4	8
	mm	1219	546	1010	203

* If interior of chase will be drywalled, add the thickness to this measurement.
** Rough opening dimension to be able to get fireplace installed.

Figure 3.5 Framing the Fireplace

F. Protective Metal Hearth Strips

WARNING! Risk of Fire! *Protective metal hearth strips MUST be installed on combustible surfaces.* ***DO NOT*** *cover metal strips with combustible materials. Sparks or embers may ignite flooring.*

WARNING! Risk of fire! *High temperatures, sparks, embers or other burning material falling from the fireplace may ignite flooring or concealed combustible surfaces.*

- *Protective metal hearth strips MUST be installed.*
- *Hearth extensions MUST be installed exactly as specified.*

- Locate the two protective metal hearth strips measuring approximately 26 in. x 4 in. (660 mm x 102 mm) included with this fireplace.
- Slide each metal strip 2 in. (51 mm) under front edge of fireplace.
- Overlap strips in the middle of fireplace opening by 1 in. (25 mm) minimum.
- Metal strips must extend beyond the front and sides of the fireplace opening by at least 2 in. (51 mm), Figure 3.6).
- Protect the front of a platform elevated above the hearth extension with metal strips (not included with fireplace) per Figure 3.6. See Section 7 for hearth extension instructions.

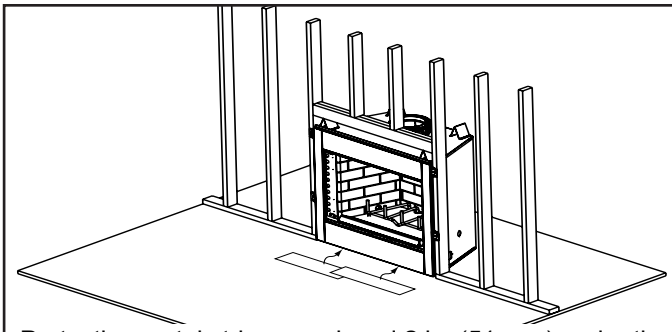

Protective metal strips are placed 2 in. (51 mm) under the front of the fireplace and must extend beyond the front and sides of fireplace opening by 2 in. (51 mm)

Figure 3.6 Position the Protective Metal Hearth Strips

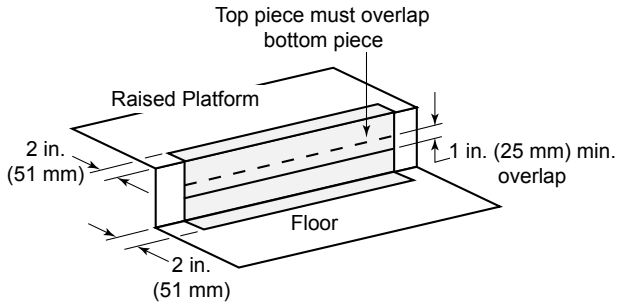

Figure 3.7 Protect the Front of an Elevated Platform

G. Outside Air Kit (optional)

If you install an outside air kit, Hearth & Home Technologies recommends you utilize the shortest duct run to optimize the performance of the outside air kit and install a P-trap (see Figure 3.10). The outside air inlet hood should be positioned in a manner that will not allow snow, leaves, etc. to block the inlet. In some installations the air duct may need to be run vertically. In such an installation, a 3 ft (914 mm) height difference must be maintained from the top of the uppermost chimney section to the outside air inlet hood.

NOTE: The maximum length of a 4 inch diameter duct is 20 feet. The duct can be extended up to a maximum of 40 feet by using 6 inch duct. A 4 inch to 6 inch adapter will be needed. (Not included).

NOTE: The minimum cross-sectional area of the 4 inch inlet hood is 7.0 square inches.

Refer to Figures 3.8 and 3.9 when placing the outside air inlet hood.

The outside air kit is installed on the left hand side of the fireplace.

- Cut a 4-1/2 in. (114 mm) hole in outside wall to accommodate air piping.
- Use 4 in. (102 mm) flex (not supplied) to directly connect outside air to fireplace intake. Insulate the pipe to prevent frost condensation.
- Seal between the wall and the pipe with silicone to prevent moisture penetration and air leaks.
- Seal between the outside air inlet hood and the house with silicone to prevent air infiltration.

***CAUTION! Risk of Fire or Asphyxiation! DO NOT** draw outside combustion air from wall, floor or ceiling cavity, or enclosed spaces such as an attic or garage.*

- ***DO NOT** place outside air inlet hood close to exhaust vents or chimneys. Fumes or odor could be drawn into the room through the fireplace.*
- *Locate outside air inlet hood to prevent blockage from leaves, snow/ice, or other debris. Blockages could cause combustion air starvation.*

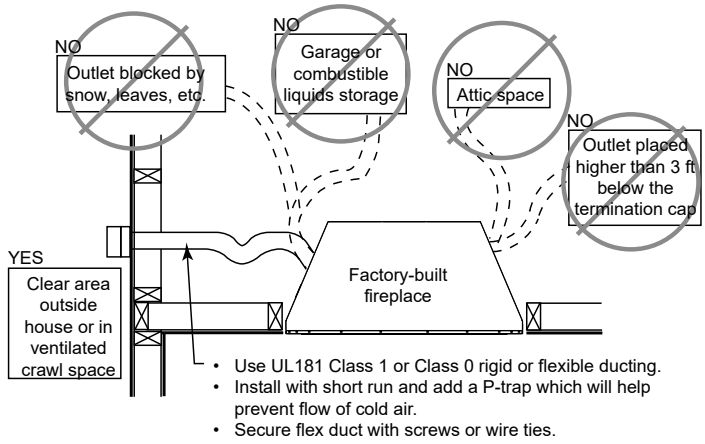

Figure 3.8 Outside Air Installation

***CAUTION! Risk of Cuts/Abrasions.** Wear protective gloves and safety glasses during installation. Sheet metal edges are sharp.*

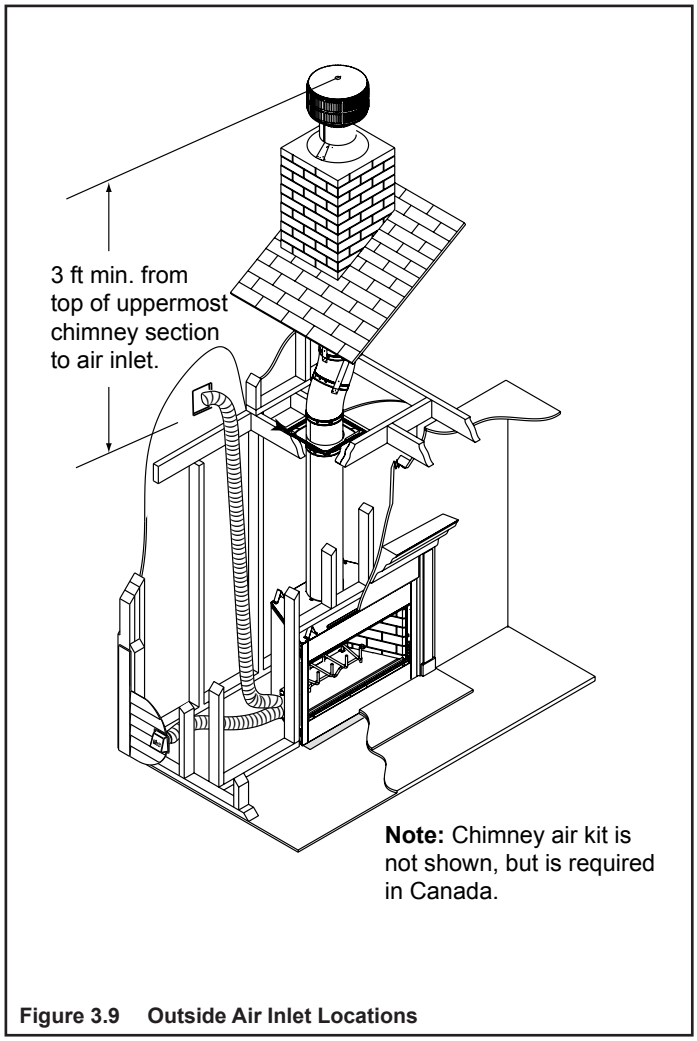

Figure 3.9 Outside Air Inlet Locations

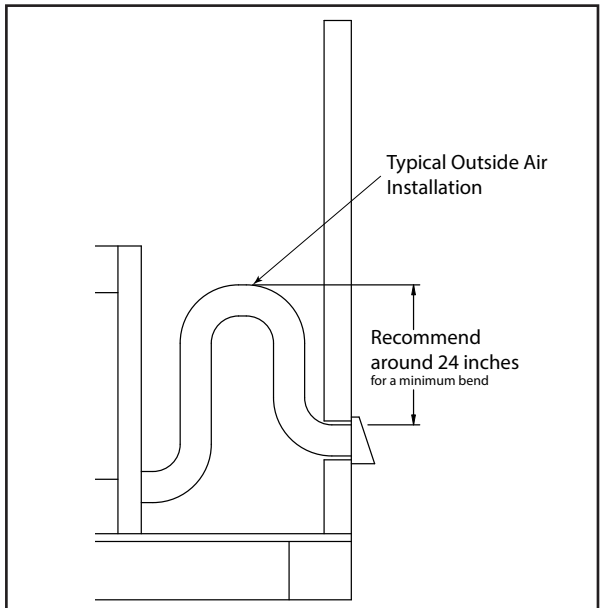

Figure 3.10 Outside Air Installation with Cold Air Trap

4 Chimney and Termination Requirements

A. Chimney Requirements

Vertical distances are measured from the base of the fireplace as shown in Figure 4.1.

Table 4.1 Chimney Requirements

• Minimum overall straight height	13	(3.96 m)
• Minimum height with offset/return	14.5 ft	(4.42 m)
• Maximum height	90 ft	(27.43 m)
• Maximum chimney length between an offset and return	20 ft	(6.1 m)
• Maximum distance between chimney stabilizers	35 ft	(10.67 m)
• Double offset/return minimum height	20 ft	(6.1 m)
• Maximum unsupported chimney length between the offset and return	6 ft	(1.83 m)
• Maximum unsupported chimney height above the fireplace	35 ft	(10.67 m)
• Maximum unsupported chimney above roof	6 ft	(1.83 m)

NOTICE: *A maximum of two pairs of offsets and returns may be used.*

WARNING! Risk of Fire! *You must maintain 2 in. (51 mm) air space clearance to insulation and other combustible materials around the chimney system. Failure to do so may cause overheating and fire.*

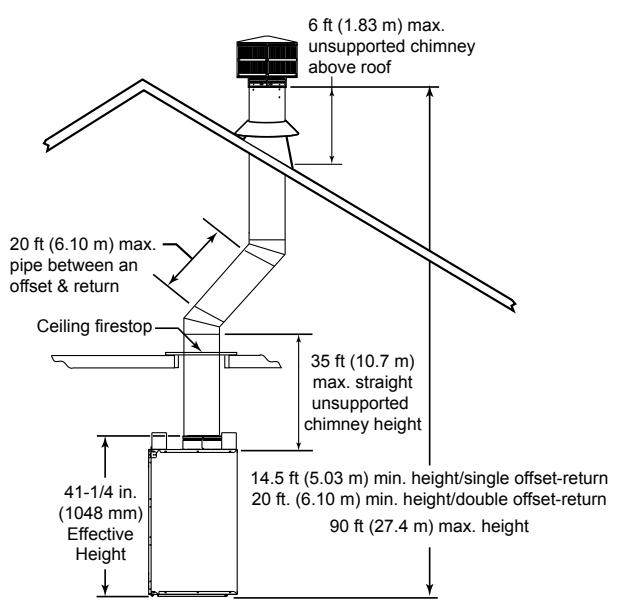

Figure 4.1 Chimney Requirements

NOTICE*: You must provide support for the pipe during construction and check to be sure inadvertent loading has not dislodged the chimney section from the fireplace or at any chimney joint.*

Table 4.2 Chimney Component Dimensions

HEIGHT OF CHIMNEY COMPONENTS		*in.*	*mm*
Chimney Stabilizer			
	SL3	4-3/4	121
Offsets/Returns			
	SL315	13-3/8	340
	SL330	15-1/2	394
Chimney Sections*			
	SL306	4-3/4	121
	SL312	10-3/4	273
	SL318	16-3/4	425
	SL324	22-3/4	578
	SL336	34-3/4	883
	SL348	46-3/4	1187

*** Dimensions reflect effective height.**

B. Offsets/Returns

- Use an offset/return to bypass overhead obstructions.
- An offset and return can be used as a single entity or separated by chimney section(s).

  ***WARNING! Risk of Fire! DO NOT** use offset/returns greater than 30°. Chimney draft will be restricted and could cause overheating and fire. Secure offsets with screws (not to exceed 1/2" / 13 mm in length) Secure returns with strapping. Straight chimney sections may be secured with screws. Keep chimney sections from separating or twisting.*

- Measure the shift needed to avoid the overhead obstruction. Refer to dimension A in Figure 4.2.
- Find the appropriate A dimension listed in Table 4.3. The B dimension coinciding with the A dimension measurement in Table 4.3 represents the required vertical clearance needed to complete the offset/return.
- Read across the chart to find the number of chimney sections/model numbers needed between the offset and return.

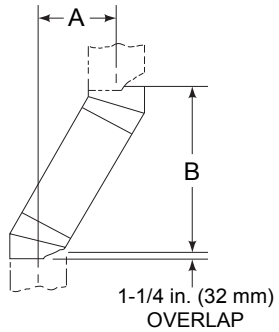

Figure 4.2 Chimney Offset/Return

Example:

Your "A" dimension from Figure 4.2 is 14-1/2 in. (368 mm). Using Table 4.3 the dimension closest to, but not less than 14-1/2 in. (368 mm) is 14-1/2 in. (368 mm) using a 30° offset/return.

You determine from the table that you need 34-1/8 in. (867 mm) (Dimension "B") between the offset and return.

The chimney component that best fits your application is one SL324.

Table 4.3 Offset Dimensions

15-degree				30-degree									
A		B		A		B							
in.	*mm*	*in.*	*mm*	*in.*	*mm*	*in.*	*mm*	SL306	SL312	SL318	SL324	SL336	SL348
1 5/8	41	13 3/8	340	3 5/8	92	15 1/2	394	-	-	-	-	-	-
2 7/8	73	17 3/4	451	5 1/2	140	18 5/8	473	1	-	-	-	-	-
4 1/8	102	22 3/8	568	7 1/4	184	21 3/4	552	2	-	-	-	-	-
4 1/2	114	23 5/8	600	8 1/2	216	23 3/4	603	-	1	-	-	-	-
5 3/4	146	28 1/4	718	10 1/4	260	27	686	1	1	-	-	-	-
6	152	29 3/8	746	11 1/2	292	29	737	-	-	1	-	-	-
7 1/4	184	34	864	13 1/4	337	32 1/8	816	-	2	-	-	-	-
7 3/4	197	36 1/8	918	14 1/2	368	34 1/8	867	-	-	-	1	-	-
8 3/4	222	39 3/4	1010	16 1/4	413	37 3/8	949	1	-	-	1	-	-
10 3/8	264	45 5/8	1159	19 1/4	489	42 1/2	1080	-	-	2	-	-	-
10 5/8	270	46 3/4	1187	20 1/2	521	44 5/8	1133	-	-	-	-	1	-
11 7/8	302	51 3/8	1305	22 1/4	565	47 3/4	1213	1	-	-	-	1	-
13 1/2	243	57 1/4	1454	25 1/4	641	52 7/8	1343	-	-	-	2	-	-
13 3/4	349	58 3/8	1483	26 1/2	673	55	1397	-	-	-	-	-	1
15	381	63	1600	28 1/4	718	58 1/8	1476	1	-	-	-	-	1
16 1/2	419	68 3/4	1746	31 1/4	794	63 1/4	1607	-	1	-	-	-	1
18	457	74 5/8	1895	34 1/4	870	68 1/2	1740	-	-	1	-	-	1
19 5/8	498	80 3/8	2042	37 1/4	946	73 3/4	1873	-	-	-	1	-	1
20 5/8	524	84 1/8	2137	39 1/8	994	76 7/8	1953	1	-	-	1	-	1
22 3/4	578	91 7/8	2334	43 1/4	1099	84 1/8	2137	-	-	-	-	1	1
24	610	96 1/2	2451	45 1/8	1146	87 1/4	2216	1	-	-	-	1	1
25 7/8	657	103 1/2	2629	49 1/4	1251	94 1/2	2400	-	-	-	-	-	2

Proper assembly of air-cooled chimney parts result in an overlap at chimney joints of 1-1/4 in. (32 mm). Effective length is built into this chart.

C. Termination Requirements

- Install a cap approved and listed for this fireplace system.
- Locate cap where it will not become plugged by snow or other materials.
- Locate cap away from trees or other structures.
- The bottom of the termination cap must be at least 3 ft (.91 m) above the roof AND at least 2 ft (.61 m) above any portion of roof within 10 ft (3.05 m).
- The distance required between caps is shown below.

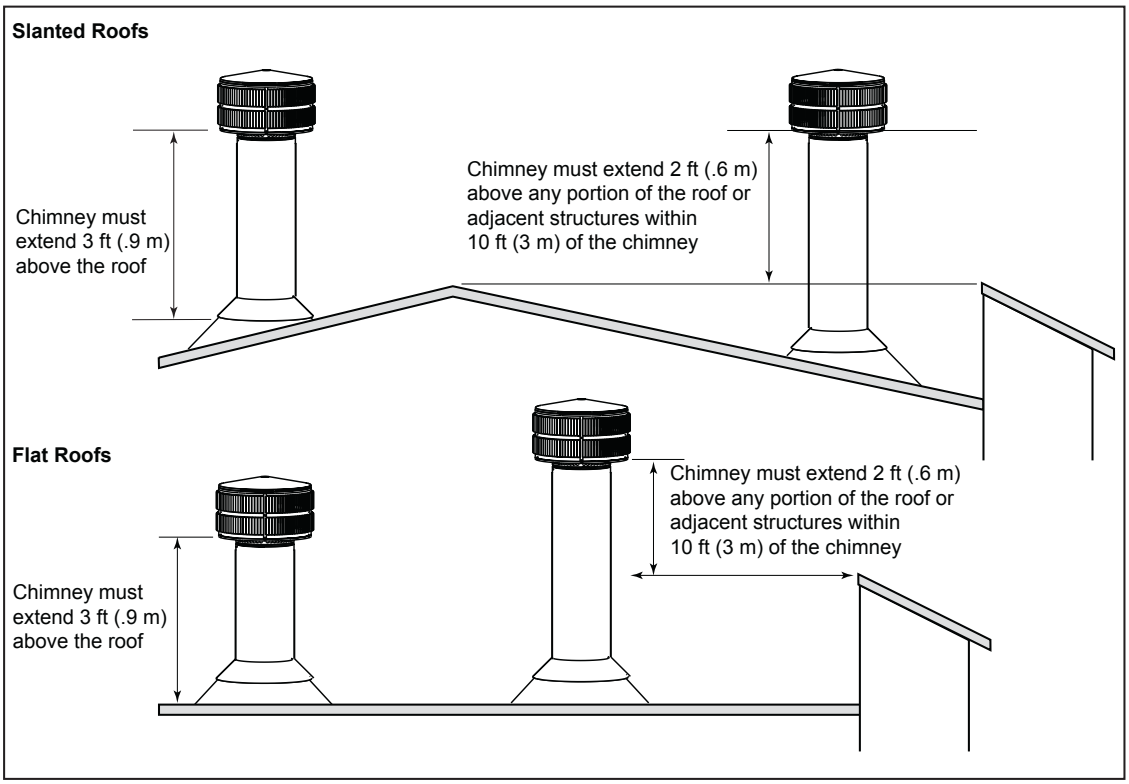

Multiple Chimney Locations

A	B
6 in. (minimum) up to 20 in. *152 mm/508 mm*	18 in. minimum *457 mm*
20 in. and over	0 in. minimum

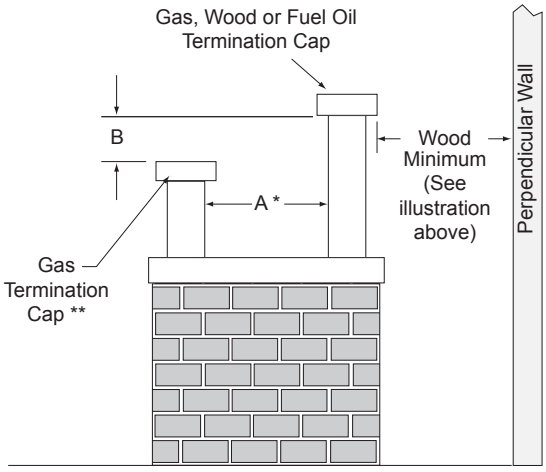

* If using decorative cap cover(s), this distance may need to be increased. Refer to the installation instructions supplied with the decorative cap cover.

** In a staggered installation with both gas and wood terminations, the wood termination cap must be higher than the gas termination cap.

Figure 4.3 Multiple Chimney Locations

5 Chimney Installation

A. Typical Chimney System

NOTICE: *Chimney performance may vary.*

- *Trees, buildings, roof lines and wind conditions affect performance.*
- *Chimney height may need adjustment if smoking or overdraft occurs.*

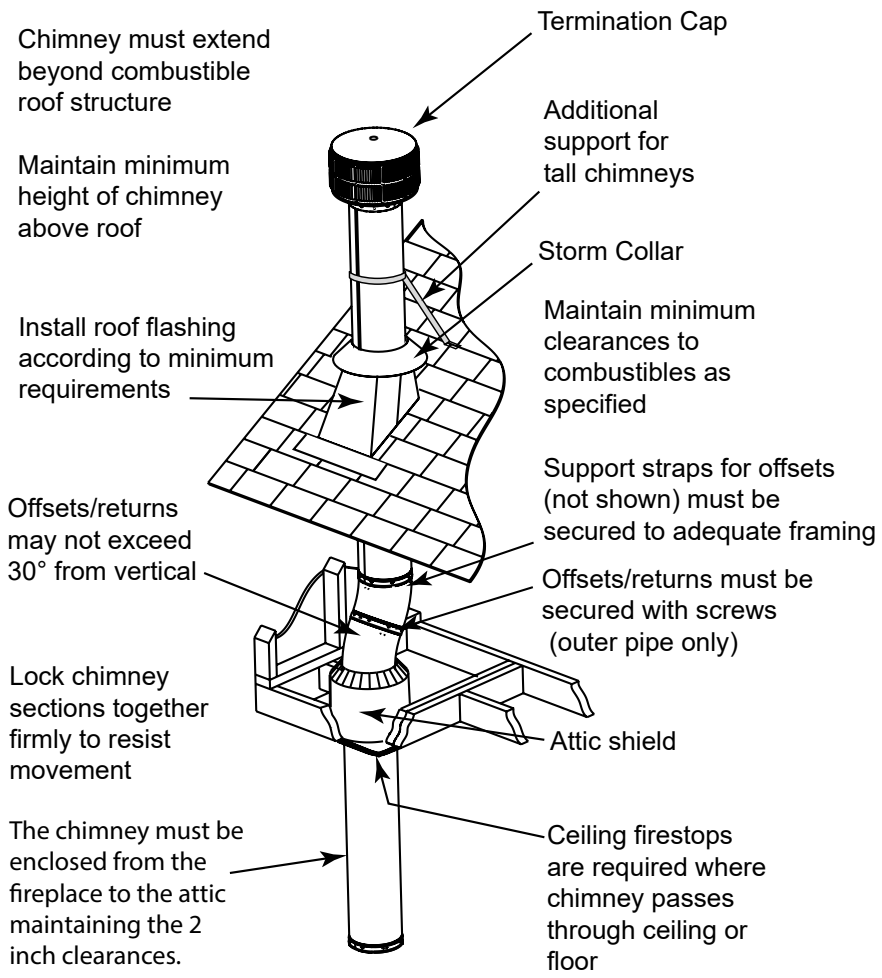

Figure 5.1 Typical Chimney System - Guidelines for Chimney System Installation

B. Assemble Chimney Sections

Use only those components described in this manual.

Substitute or damaged chimney components could impair safe operation and cause overheating and fire.

Attach either a straight chimney section or an offset to the top of the fireplace (depending on your installation requirement). Chimney sections are locked together by pushing downward until the top section meets the stop bead on the lower section.

The inner flue is placed to the inside of the flue section below it. The outer casing is placed outside the outer casing of the chimney section below it. See Figure 5.2.

NOTICE: *Chimney sections cannot be disassembled once locked together. Plan ahead!*

- Lock chimney sections and/or offsets/returns together by pushing downward until the top section meets the stop bead on the lower section.
- Pull on the top section to make sure it is fully engaged and will not separate.
- You may use #6 or #8 sheet metal screws no longer than 1/2 in. (13 mm) to fasten chimney sections together. Do NOT penetrate inner flue.

  WARNING! Risk of Fire! *You MUST use screws to fasten offset/returns to chimney sections to keep the chimney parts from twisting. Failure to do so could cause fire.*
- Fasten offset/returns to chimney sections. Do NOT penetrate inner flue.
- Secure chimney returns with hanger straps provided; fasten to studs or joists.
- Vertical straight runs of chimney must be supported every 35 ft (10.7 m).

  WARNING! Risk of Pinch Point! *Failure to secure elevated flue with methods not able to bear the full weight of the pipe could result in serious injury.*

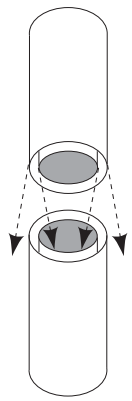

Figure 5.2 Assembling Chimney Sections

WARNING! Risk of Fire! DO NOT *install substitute or damaged chimney components.*

C. Install Chimney Air Kit

- Required in Canada.
- Follow instructions included with accessory.

D. Secure Offset/Return

When offsets and returns are joined to straight pipe sections, they must be locked into position with screws. To prevent gravity from pulling the chimney sections apart, the returns and the chimney stabilizers have hanger straps for securing these parts to joists or rafters. See Figure 5.3.

* Use # 6 or # 8 sheet metal screw, or larger, no longer than 1/2 in. (13 mm).

WARNING! Risk of Fire!

- *Secure offsets with screws (not to exceed 1/2 in./13 mm In length).*
- *Secure returns with strapping.*
- *Straight chimney sections may be secured with screw (not to exceed 1/2 in./13 mm In length) at the joints.*
- *Keep chimney sections from separating or twisting.*

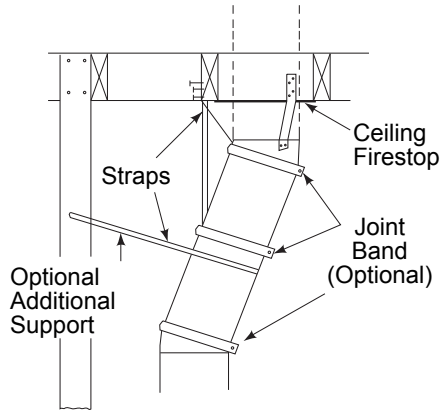

Figure 5.3 Secure the Chimney

E. Install Ceiling Firestops

CAUTION! Risk of Fire! *Ceiling firestops must be used whenever the chimney penetrates a ceiling/floor.*

- *Chase construction requires ceiling firestops at each floor or every 10 ft. (3.05 m) of clear space.*
- *The ceiling firestop slows spread of fire and reduces cold air infiltration.*

- Install a ceiling firestop whenever chimney penetrates ceiling/floor.
- Mark and cut an opening in ceiling as shown in Figure 5.4.
- Frame the opening with the same size lumber used in the ceiling joists.
- Nail the ceiling firestop to the bottom of the ceiling joists when there is a room above.
- Use an attic insulation shield if the ceiling is insulated. The ceiling firestop may then be attached above or below the joists.

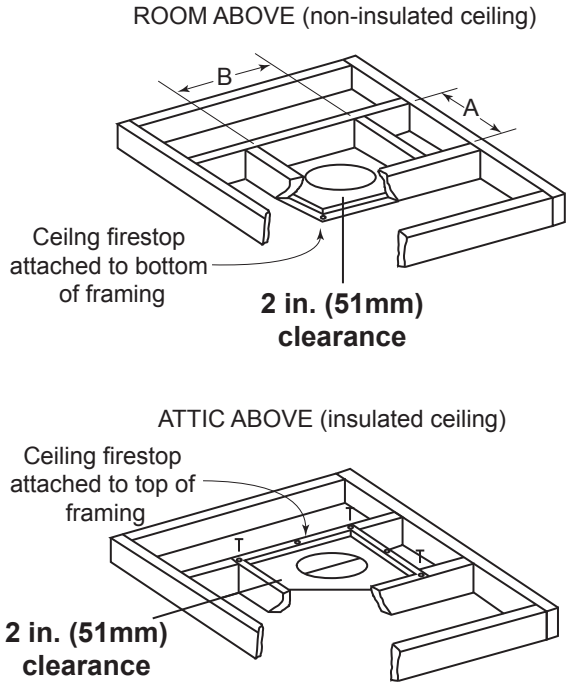

Note: Use same dimensional lumber for framing ceiling firestop and joists.

	A		B	
Catalog #	*in.*	*mm*	*in.*	*mm*
FS338	14-1/2	368	14-1/2	368
FS339	14-1/2	368	18-3/8	467
FS340	14-1/2	368	23	584

Figure 5.4 Installing the Ceiling Firestop

WARNING! Risk of Fire! DO NOT *seal area between firestop opening and chimney pipe except where they enter the attic or leave the warm air envelope of the home (use 600° F sealant).*

F. Install Attic Insulation Shield

WARNING! Risk of Fire! *You MUST install an attic insulation shield when there is any possibility of insulation or other combustible material coming into contact with the chimney.*

- ***DO NOT*** *pack insulation between the chimney and the attic insulation shield.*
- *Failure to keep insulation and other materials away from chimney pipe could cause fire.*
- ***DO NOT*** *offset chimney inside insulation shield.*
- *Combustible material may come into contact with the attic insulation shield as long as the required clearances are maintained to the chimney pipe.*

Installation of a ceiling firestop is required:

Note: In Canada a CAS8 must be installed. See instructions provided with kit.

- Refer to Figures 5.5, 5.6, 5.7.
- If the attic shield is pre-rolled continue. If it is a flat part, try and roll it up to aid in wrapping it around the chimney.
- Pre-bend all the tabs in at the top to 45°.
- Wrap the shield (around the chimney if already installed) until you have an overlap and the three holes on each side match up (large holes on top).
- Insert three screws into the matching holes to form a tube starting at the bottom.
- Bend the tabs on the bottom of the tube inward to 90° to maintain chimney air space.
- Rest the insulation shield on the ceiling firestop below.
- Tape off any opening around the bottom.

If you wish to make a custom shield or barrier, follow these guidelines:

- Metal is preferred, although any material stiff enough to hold back the insulation can be used.

  WARNING! Risk of Fire! *Use of cardboard or other materials that can deflect under humidity or other environmental conditions is not recommended.*
- The shield or barrier must be tall enough to extend above the insulation and prevent blown-in insulation from spilling into the cavity and accommodate the amount of insulation as required by the National Building Code.
- Maintain specified air spaces around chimney.
- Check instructions and local codes for further details.

Double-check the Chimney Assembly

Continue assembling the chimney sections up through the ceiling firestops as needed. While doing so, be aware of the height and unsupported chimney length limitations given under Section 5.

Check each section by pulling up slightly from the top to ensure proper engagement before installing the succeeding sections. If they have been connected correctly, they will not disengage when tested.

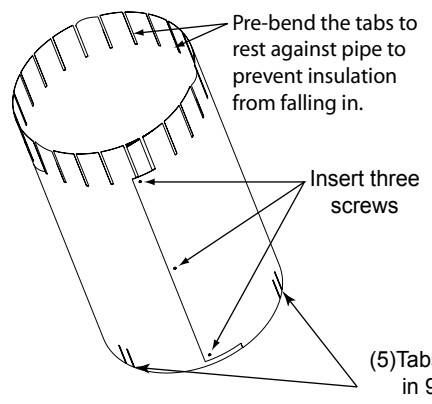

Figure 5.5 Prepare Attic Insulation Shield

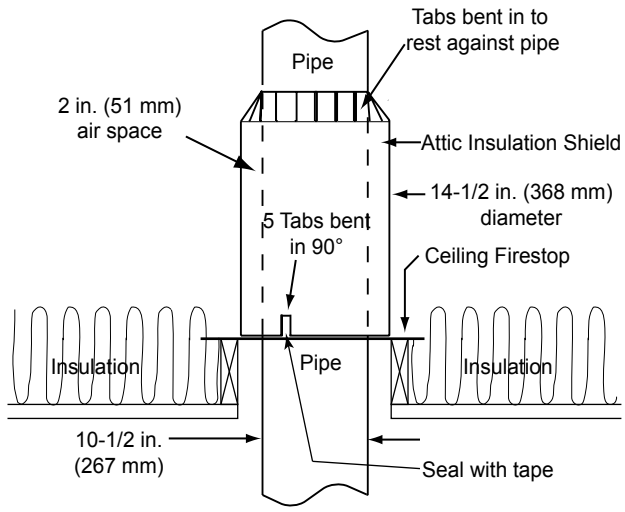

Figure 5.6 Install Attic Insulation Shield (firestop above ceiling)

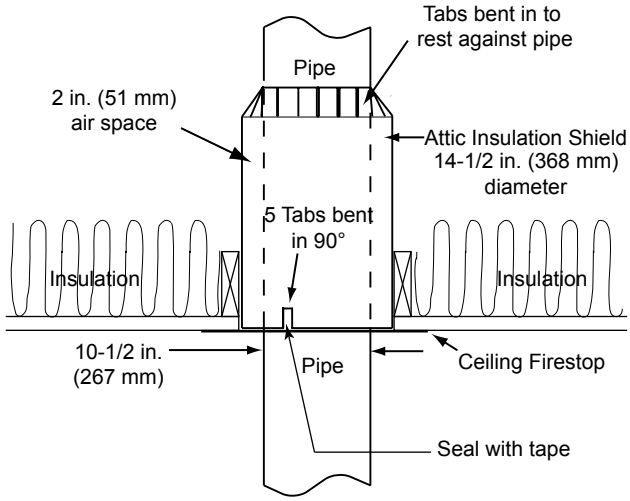

Figure 5.7 Install Attic Insulation Shield (firestop below ceiling)

G. Roof Penetration

- Refer to Figure 5.8.
- Plumb from roof to center of chimney.
- Drive a nail up through roof to mark center of pipe.
- Measure to either side of nail and mark the 14-1/2 in. x 14-1/2 in. (368 mm x 368 mm) opening required.
- Measure opening on the horizontal; actual length may be larger depending on roof pitch.
- Cut out and frame opening.

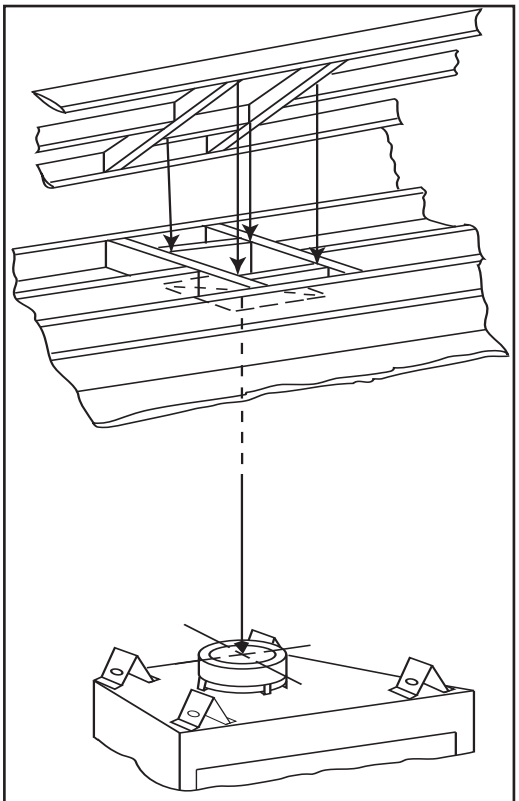

Figure 5.8 Ceiling/Attic Construction

Install Flashing

- Assemble chimney so it passes through the framed opening.
- Slip the flashing over the chimney.

NOTICE: *Roofing shingles must be below the flashing plate on the lower side of a sloped roof and over the flashing plate on the sides and top.*

- Nail the flashing to the roof. Keep gaps between the flashing plate and the roof to a minimum.
- Caulk the flashing plate and roof junction as well as the vertical seam on the flashing. All nail heads must be caulked with a roofing sealant.
- Caulk the overlap seam of any exposed pipe sections that are located above the roof line to prevent leaks.

H. Install Chase/Chase Top

- You MUST use a chase top in a chase installation. Chase tops may be field constructed.
- Include a turndown and drip edge to prevent water from seeping into the chase.
- Include a 2 in. (51 mm) soldered, welded or spun collar around pipe opening to keep water out.
- Provide a 1/8 in. (3 mm) gap around the flue pipe.
- Slope the chase top downward away from the opening.

WARNING! Risk of Fire! DO NOT *caulk the pipe to the chase top collar.*

- Caulk all seams to prevent leaks.

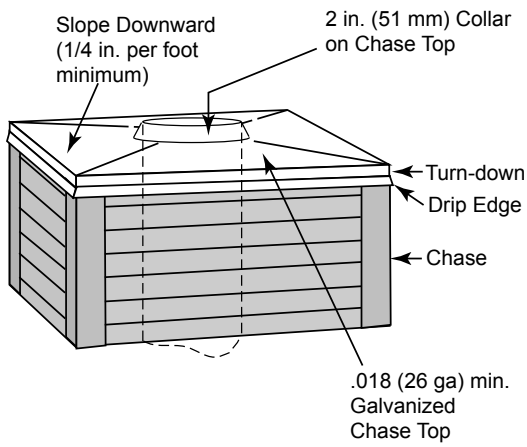

Figure 5.9 Chase Top Construction

I. Termination Cap Requirements

- Install a cap approved and listed for this fireplace system.
- Locate cap where it will not become plugged by snow or other materials.
- Locate cap away from trees or other structures.
- The bottom of the termination cap must be at least 3 ft (.91 m) above the roof AND at least 2 ft (.61 m) above any portion of roof within 10 ft (3.05 m).

J. Install Termination Cap

Install the chimney sections up through the chase enclosure.

- Caulk the overlap seam of any exposed pipe sections that are located above the roof line to prevent leaks.
- Refer to termination cap instructions.

WARNING! Risk of Fire! *The minimum overlap of cap to pipe (as shown in the following illustrations) MUST be met or chimney may separate from cap. Separation allows sparks, heat and embers to escape.*

NOTICE: *Paint the termination cap with a rust-resistant paint to protect against the effects of corrosion on those parts exposed to the weather.*

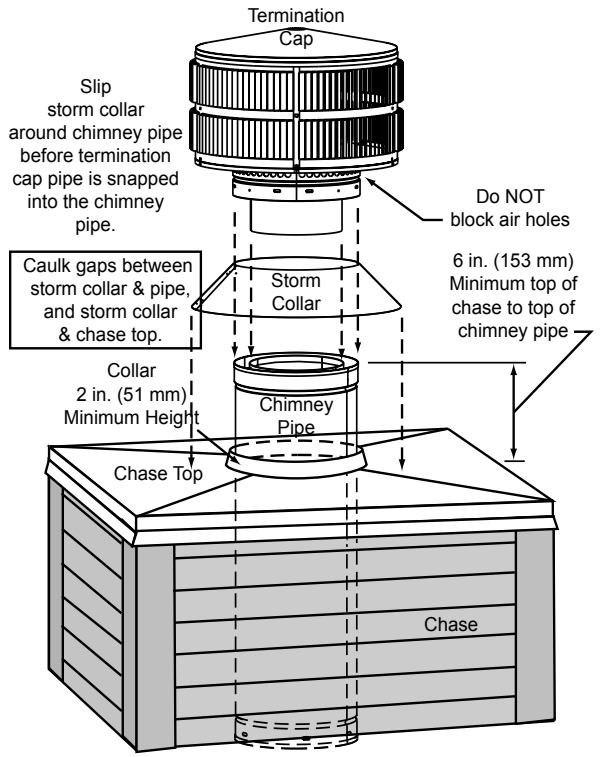

Termination cap pipe and chimney section must be snapped together to maintain an overlap of 1-1/2 in. (38 mm).

Figure 5.10 Installing a TR344 Round Termination Cap

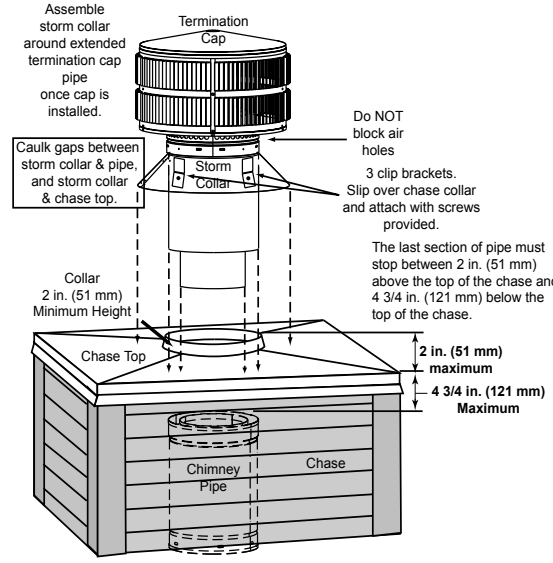

Figure 5.11 Installing a TR342-B Round Telescoping Termination Cap

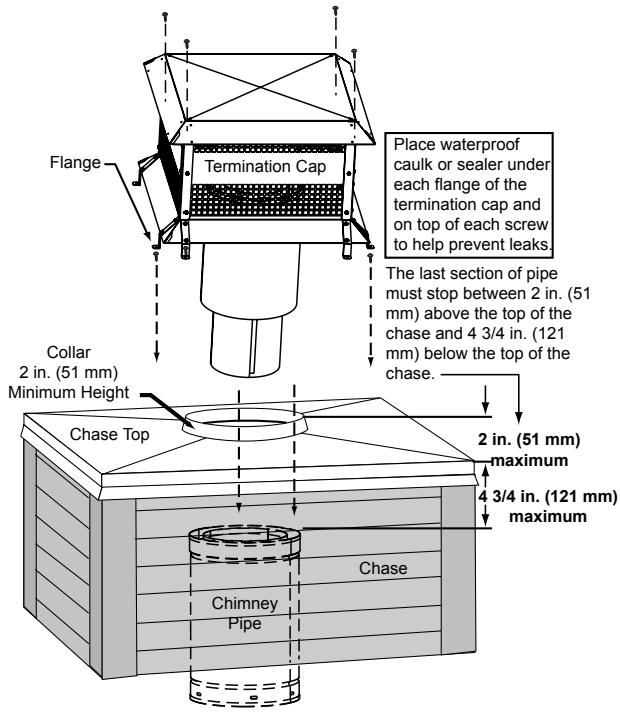

Figure 5.12 Installing an ST375 Square Termination Cap

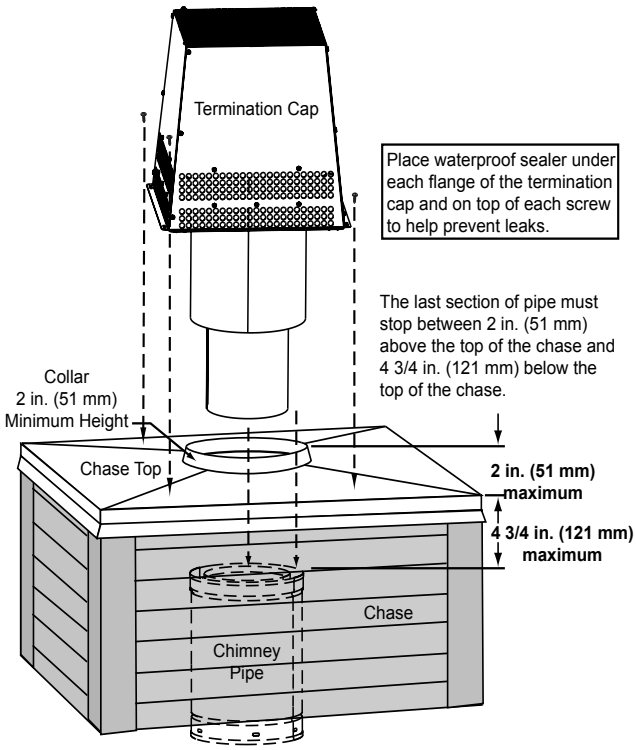

Figure 5.13 Installing a TS345/TS345P Square Termination Cap

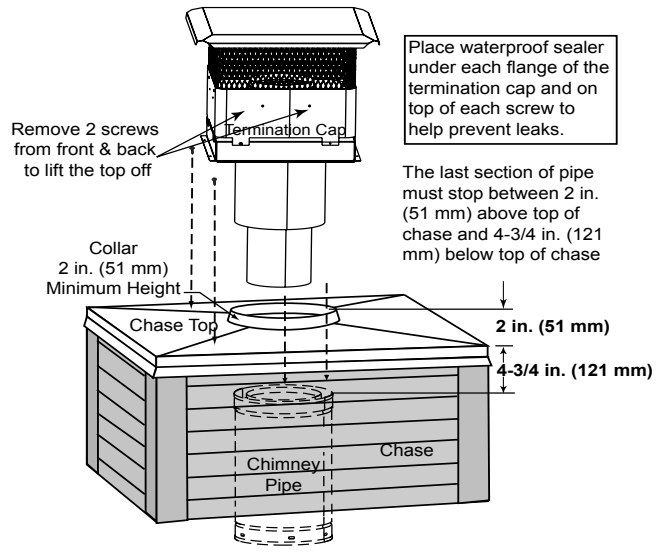

Figure 5.14 Installing a TCT375 Terra Cotta Cap

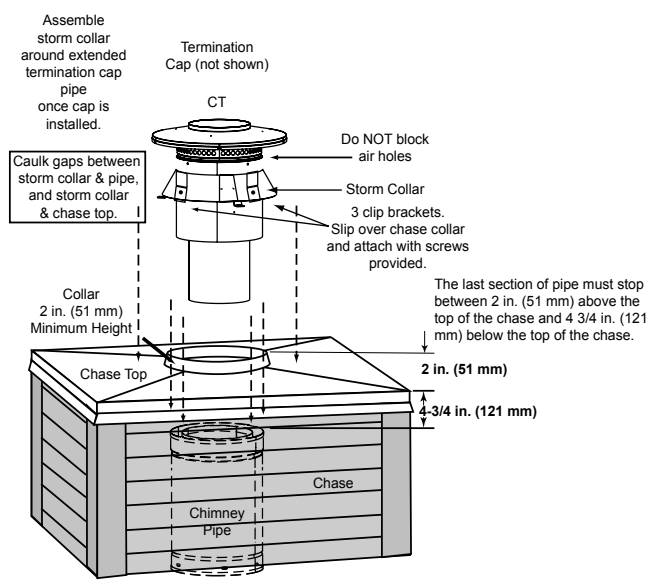

Figure 5.15 Installing CT-3A-B Cap Adapter

6 Shrouds

***WARNING! Risk of Fire!** Shrouds must be constructed as specified. Improper construction may overheat chase top.*

Shrouds may be field constructed where permitted by regional building codes.

***NOTICE:** Some regional codes require an agency-Listed shroud. Consult your local building officials.*

The shrouds must be constructed from minimum .018 in. (26 ga) thick aluminized steel.

Some shrouds require a radiation shield. Use where specified.

A. Radiation Shield

Radiation shield must be constructed of minimum 26 ga thick sheet metal.

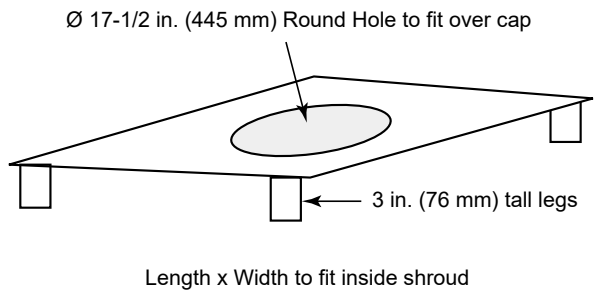

Figure 6.1 Radiation Shield

B. Field Constructed Shrouds

The following field constructed shroud designs have been tested for HHT fireplace systems and termination caps.

1. Open Top Shroud

TR342/344TV (top vent) caps do not require radiation shield

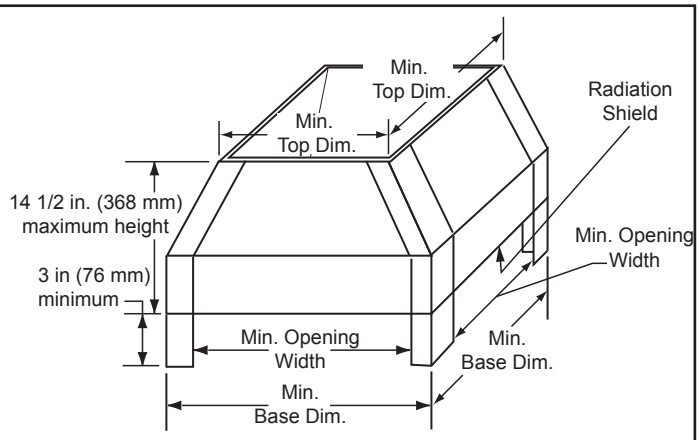

	TS345	TR344 TR342B	TR342B/TR344 with TR-TVK
Min. Base Dims.			
in	23 x 23	28 x 28	26 x 26
mm	584 x 584	711 x 711	660 x 660
		Radiation Shield Required	Radiation Shield Not Required
Min. Top Dims.			
in	20 x 20	25 x 25	23 x 23
mm	508 x 508	635 x 635	584 x 584
Min. Opening Width			
in	17 x 17	22 x 22	20 x 20
mm	432 x 432	559 x 559	508 x 508

Figure 6.2 Open Top Shroud Dimensions

TR342B and TR344 caps require radiation shield unless installed partially above the shroud. The TR cap must be raised to the minimum dimensions (or greater) above the shroud or install a TR-TVK. Refer to Figure 6.3.

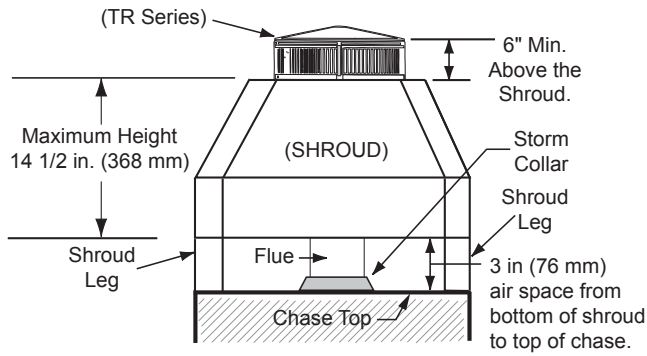

Figure 6.3 Shroud & TR Series cap with no Radiation Shield

2. Mailbox Style Shroud

Radiation shield required

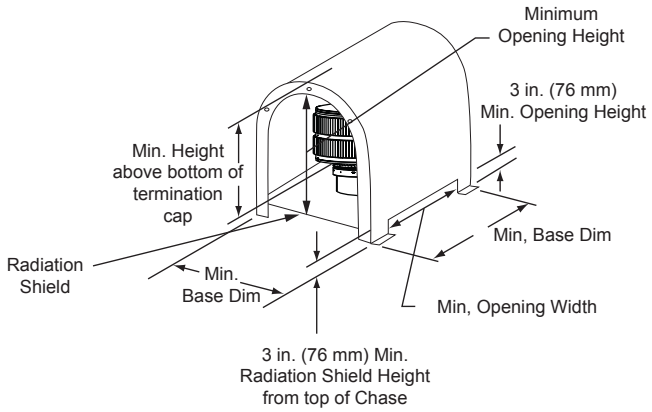

	TR344 TR342-B	TR342-B TR344/ with TR-TVK
Min. Base Dims.		
in	26-1/2 x 28	28 x 30
mm	673 x 711	711 x 762
Min. Height Above Bottom of Termination Cap		
in	28-1/4	27-1/2
mm	718	698
Min. Opening Width		
in	20-1/2	22
mm	521	559
Min. Opening Height		
in	18-1/4	17-1/2
mm	464	445

Figure 6.4 Mailbox Style Shroud Dimensions

3. Roofed Style Shroud

Radiation shield required

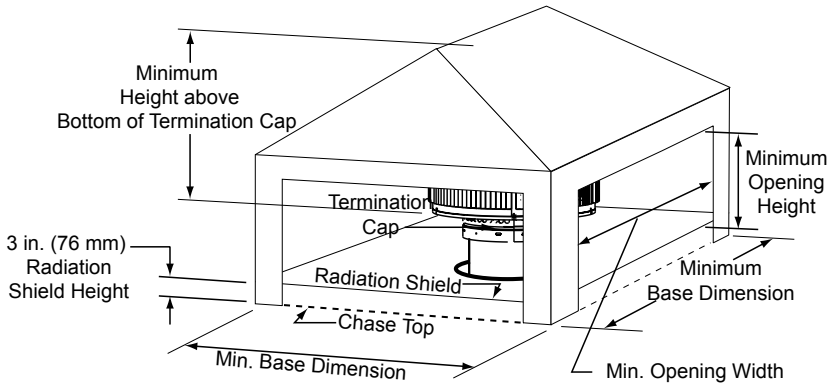

TR342B/344 TR442B/444 or with TR-TVK	
Min. Base Dims.	
in	27 x 27
mm	686 x 686
Min. Height Above Bottom of Termination Cap	
in	23
mm	584
Min. Opening Width	
in	21
mm	533
Min. Opening Height	
in	12
mm	305

Figure 65 Roofed Style Shroud Dimensions

7 Finishing

A. Finishing Material

Refer to Sections 1.B. and Sections 1.C. for combustible/non-combustible materials. Refer to Figure 7.1 for non-combustible zone.

***WARNING! Risk of Fire!** You must maintain clearances.*

- ***DO NOT** cover metal fireplace front with combustible materials.*
- *Install combustible materials only to specified clearances on top front and side edges.*
- ***DO NOT** place header or combustible framing below top standoffs.*

- Complete framing and apply drywall over framing.
- Facing material can butt up to metal face and columns of fireplace.
- Only non-combustible materials may be used to cover the metal fireplace front.
- A bead of 300-deg F minimum non-combustible sealant must be used to close off any gaps at the top and sides between the fireplace and drywall to prevent cold air leaks.

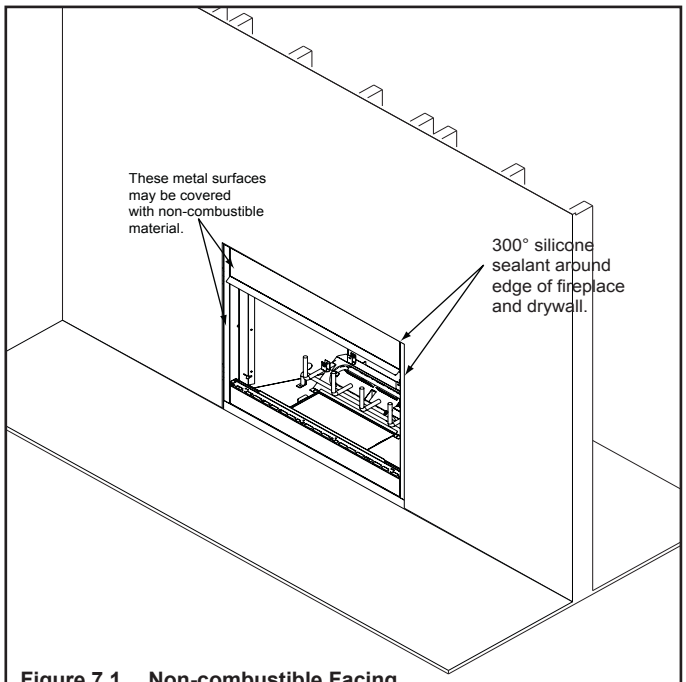

Figure 7.1 Non-combustible Facing

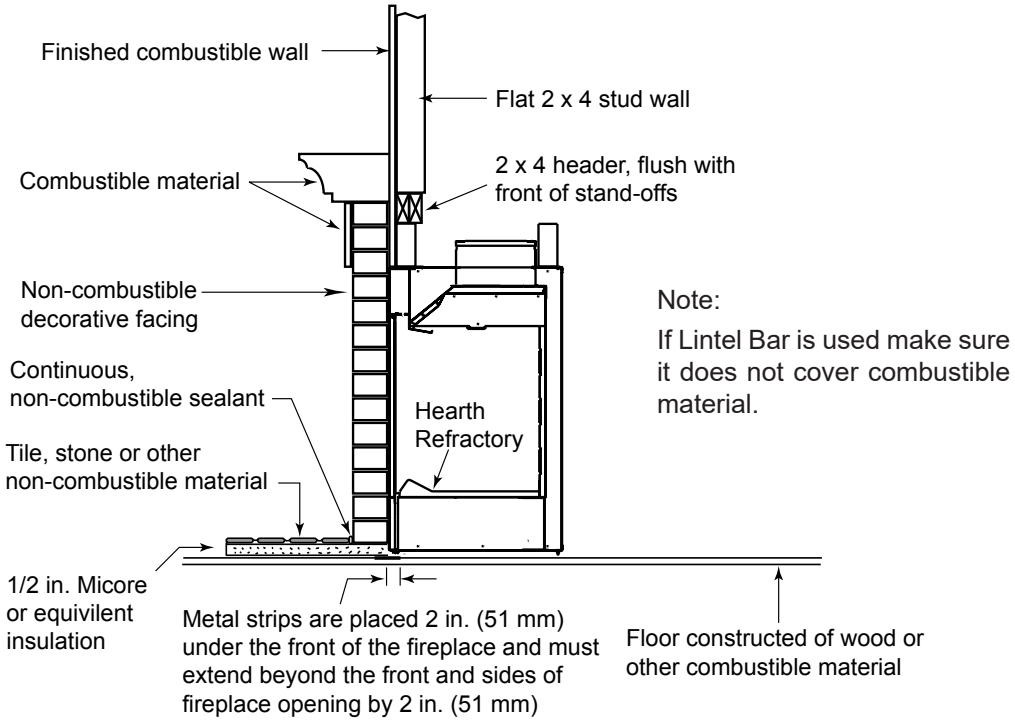

Figure 7.2 Decorative Facing

B. Hearth Extension, Building and Finishing

WARNING! Risk of Fire! *High temperatures, sparks, embers or other burning material falling from the fireplace may ignite flooring or concealed combustible surfaces.*

- *Protective metal hearth strips MUST be installed.*
- *Hearth extensions MUST be installed exactly as specified.*

A hearth extension must be installed with all fireplaces to protect the combustible floor in front of the fireplace from both radiant heat and sparks.

- You MUST use a hearth extension with this fireplace.
- Refer to Figure 7.3 for minimum dimensions.
- This fireplace has been tested and approved for use with a hearth extension insulated to a minimum R value of 1.03.
- The hearth extension material MUST be covered with tile, stone or other non-combustible material.
- Manufactured hearth materials will usually have a published **R value** (resistance to heat) or **k value** (conductivity of heat). Refer to the formula in Table 7.1 to convert a k value to an R value,
- Refer to Table 7.2 for hearth extension insulation alternatives.

WARNING! Risk of Fire!

Hearth & Home Technologies is not responsible for discoloration, cracking or other material failures of finishing materials due to heat exposure or smoke.

- *Choose finishing materials carefully.*

WARNING! Risk of Fire!

- *Maintain clearances.*
- *Framing or finishing material used on the front of the fireplace closer than the minimums listed, must be constructed entirely of non-combustible materials (i.e., steel studs, concrete board, etc.).*

WARNING! Risk of Fire!

Hearth extensions are to be installed only as illustrated to prevent high temperatures from occurring on concealed combustible materials.

Table 7.1

R = 1/k x inches of thickness

Table 7.2

Hearth Extension Insulation Alternatives, R Value = 1.03			
Material	**k per inch thick**	**r per inch thick**	**Minimum thickness required**
Hearth & Home HX3, HX4	0.49	2.06	1/2 in.
USG Micore 300™	0.49	2.06	1/2 in.
USG Durock™ Cement Board	1.92	0.52	2 in.
Cement Mortar	5.0	0.20	5 1/8 in.
Common Brick	5.0	0.20	5 1/8 in.
Ceramic Tile	12.50	0.08	12 1/4 in.
Armstrong™ Privacy Guard Plus	0.46	2.18	1/2 in.
Marble	14.3-20.0	0.07-0.05	14 5/8 in. - 20 3/8 in.

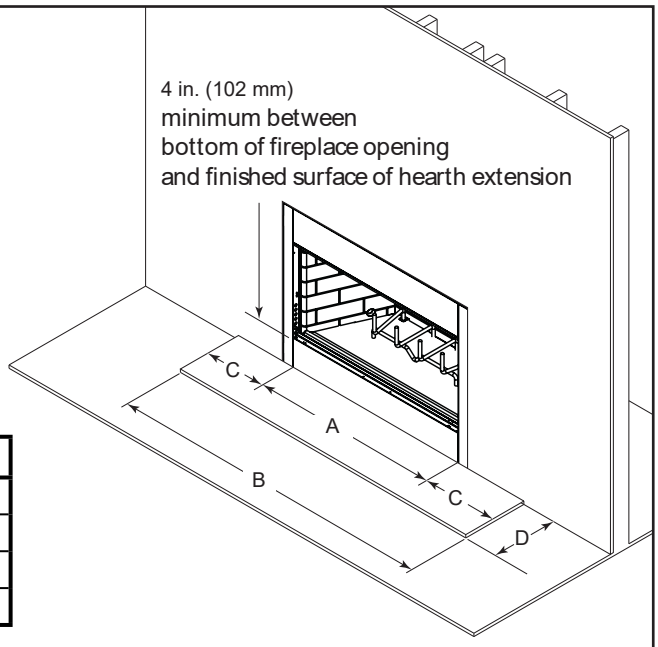

Model #		A	B	C	D
BE-36	*in.*	36	52	8	16
	mm	914	1321	203	406
BE-42	*in.*	42	66	12	20
	mm	1067	1676	305	508

Figure 7.3 Hearth Extension Dimensions

WARNING! Risk of Fire. *A raised hearth extension built flush with the fireplace opening or less than 4 in. (102 mm) below the fireplace opening requires the fireplace be installed on a non-combustible surface.*

1. Hearth Extension 4” or more Below Fireplace Opening

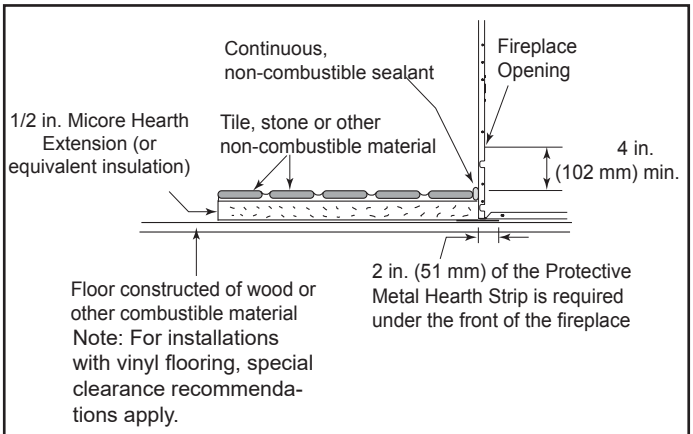

Figure 7.4 Hearth Extension Construction

Vinyl Flooring

Vinyl Flooring is sensitive to heat. A 48 inch minimum depth hearth extension is recommended when using vinyl flooring up to the wall. See Figure 7.4.

Notice: Clearances that do not meet the minimum guidelines could result in damage or buckling to the vinyl flooring and is done at the installer’s or homeowner’s risk.

Hearth and Home Technologies does not recommend adhesive based vinyl flooring due to thermal expansion. Floating-style flooring can be used, but will reach temperatures up to 110°F in a room with ambient temperatures of 70°F. Consult flooring specifications to ensure compatibility.

2. Hearth Extension Less Than 4” Below Fireplace Opening

The hearth framing must be constructed of non-combustible materials (such as metal framing or equivalent material) and placed on HX3(s), HX4(s), or equivalent material. See Figures 7.4 and 7.5.

When creating the platform, allow for the thickness of the non-combustible finishing materials.

Seal gaps between the hearth extension and the front of the fireplace with a bead of non-combustible sealant or grout.

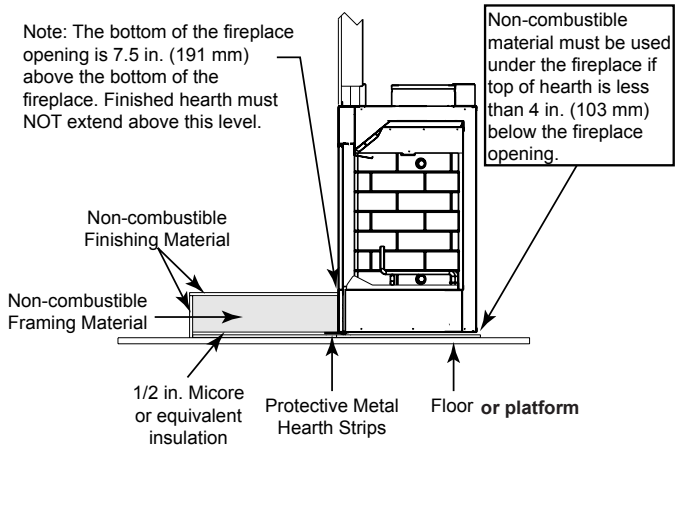

Figure 7.5 Raised Hearth Extension Detail

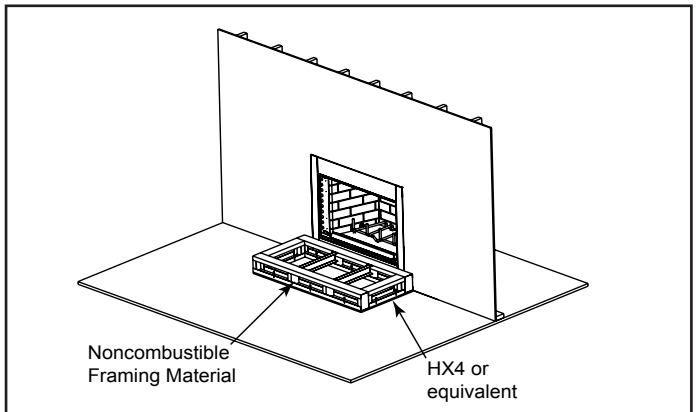

Figure 7.6 Raised Platform Hearth Extension-Framing

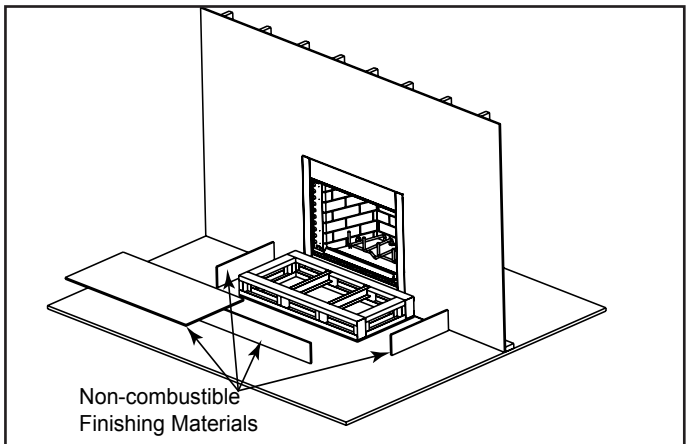

Figure 7.7 Raised Platform Hearth Extension-Finishing

3. Fireplace Opening and Hearth Extension Flush with the Floor

Non-combustible flooring a minimum of 20 in. (762 mm) in front of and 12 in. (305 mm) to each side of the fuel opening is required on the BE36 and BE42.

The hearth framing must be constructed of non-combustible materials (such as metal framing or equivalent material) and placed on HX3(s), HX4(s), or equivalent material.

When creating the platform, allow for the thickness of the non-combustible finishing materials.

Seal gaps between the hearth extension and the front of the fireplace with a bead of non-combustible sealant or grout.

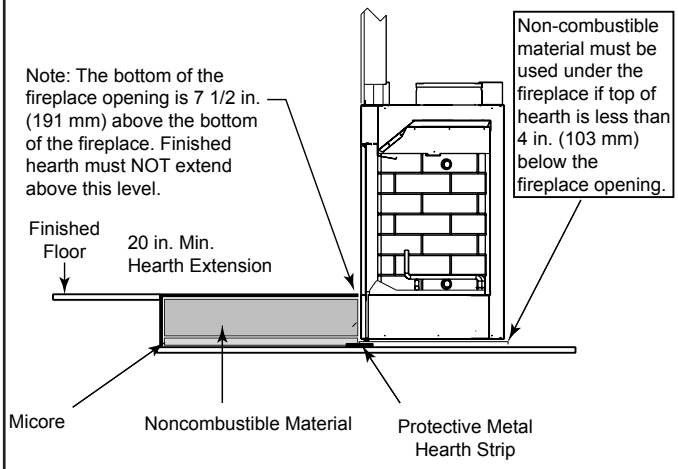

Figure 7.8 Flush Hearth Extension Side View

C. Non-Combustible Sealant Material

After completing the framing and applying the facing materials over the framing, a bead of noncombustible sealant must be used to close off any gaps at the top and sides between the fireplace and hearth.

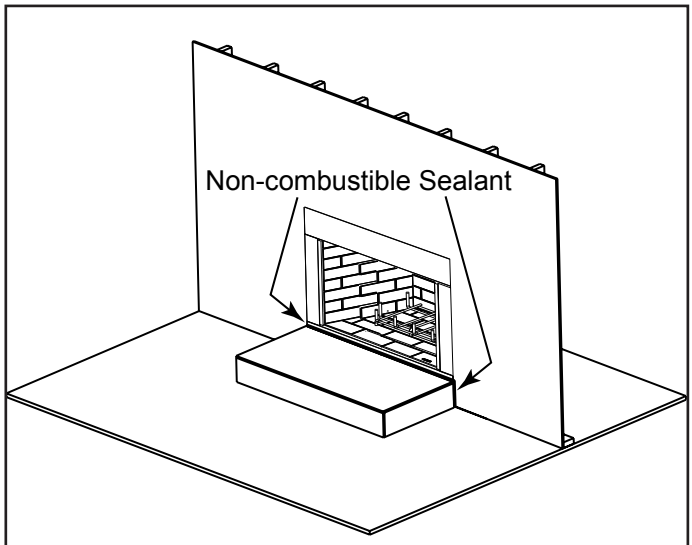

Figure 7.9 Place Non-combustible Sealant

D. Mantel and Wall Projections

The combustible mantel may have a maximum depth of 12 in. (305 mm) positioned 12 in. (305mm) above the fireplace opening. Combustible trim pieces that project no more than 1 1/2 in. (38 mm) from the face of the fireplace can be placed no closer than 6 in. (152 mm) from the top of the decorative front. Combustible trim must not cover:

- the metal surfaces of the fireplace
- where the non-combustible board is placed over the metal surfaces
- the space between the metal face of the fireplace and framing members

A non-combustible mantel can be placed lower than Figure 7.10, but all building materials that construct the wall must be changed to non-combustible.

WARNING! Risk of Fire!

You must seal around the finishing material to fireplace.

Hearth & Home Technologies is not responsible for discoloration, cracking or other material failures of finishing materials due to heat exposure or smoke.

- *Choose finishing materials carefully.*

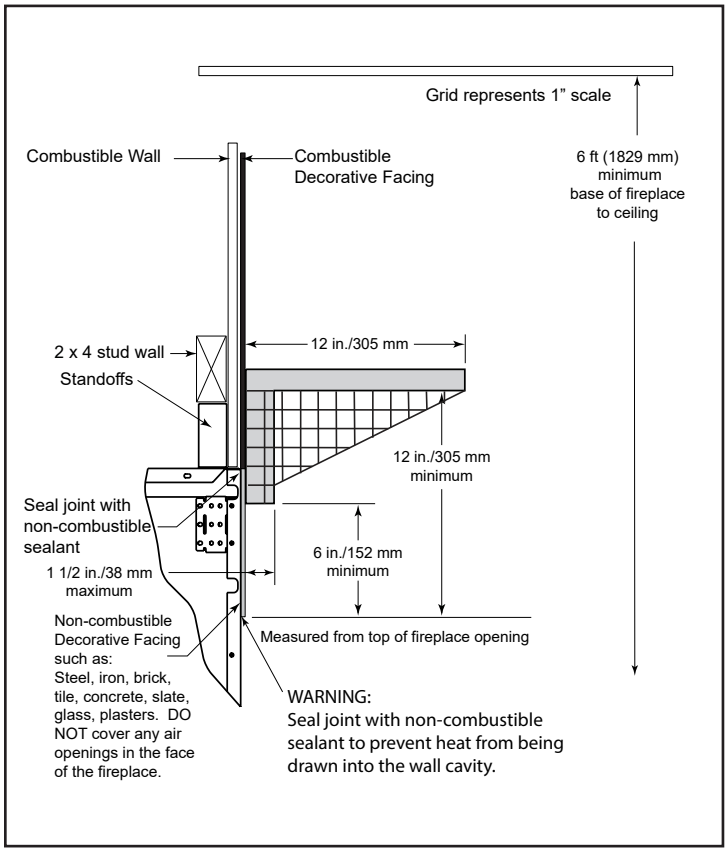

Figure 7.10 Mantel Specifications

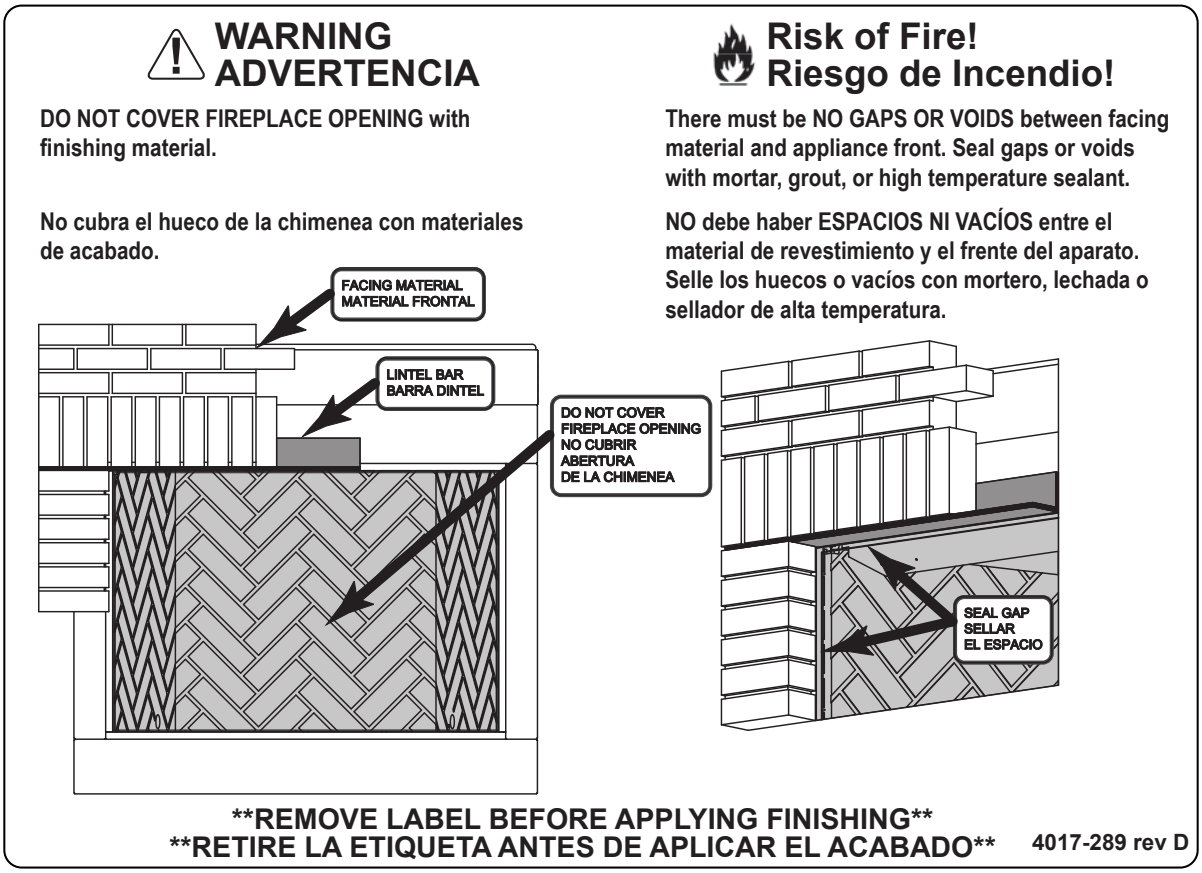

NON-COMBUSTIBLE label attached to firescreen by manufacturer.

E. Sidewalls/Surrounds

- Locate adjacent combustible sidewalls a minimum of 12 in. (305 mm) from fireplace opening.
- Mantle leg, surround, stub wall, whether combustible or non-combustible, may be constructed as shown in Figure 7.11.

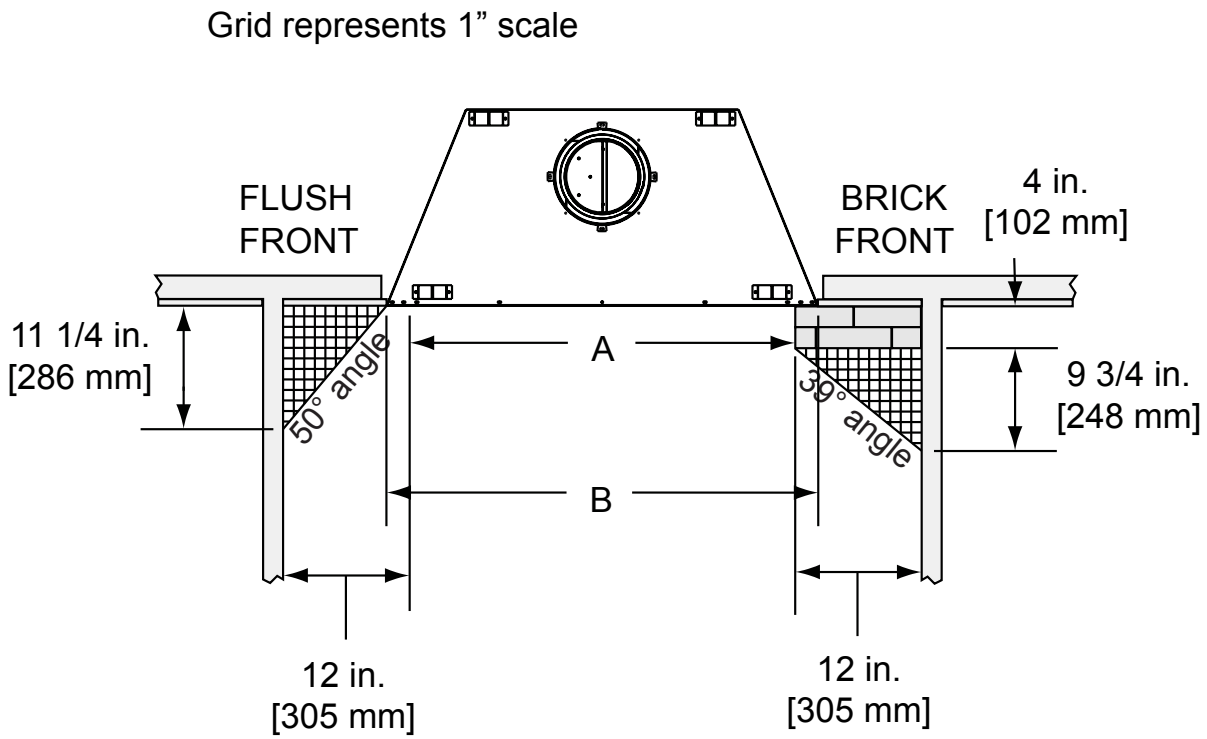

Model #		A Fireplace Opening	B Outside Dimensions
BE-36	*in.*	36	41
	mm	914	1041
BE-42	*in.*	42	47
	mm	1067	1194

Figure 7.11 Mantel Leg, Surround or Wall Projection (acceptable on both sides of opening)

8 Fireplace Setup

A. Gas Log/Lighter Provision

WARNING! Fire and/or Asphyxiation Risk! *Use with solid wood fuel or decorative gas appliance only. Gas fire generates fumes.*

- ***DO NOT*** *install unvented gas logs*
- *Damper must be locked fully open when gas logs are installed*

A certified gas log lighter or decorative gas log set can be installed in this fireplace.

- Maximum input is 100,000 BTU/hr.
- Decorative gas appliance must be certified to **ANSI Z21.60/CSA 2.26** "Standard for Decorative Gas Appliances for Installation in Vented Fireplaces".
- Must be installed in accordance with the **National Fuel Gas Code, ANSI Z223.1 and Natural Gas Installation Code, CAN/CGA-B149.1-M95 or the Propane Installation Code, CAN/CGA-B149.2-M95.**
- A gas log set must incorporate a gas shutoff.
- Gas Log set requires the damper to be locked fully open.
- A listed automatic damper system with safety interlock may be used in this fireplace with only compatible, listed gas log sets. See damper system manufacturer's instructions.
- Knockouts are provided on both sides of the fireplace and in refractories for 1/2 in. (13 mm) iron pipe.
- Seal refractory around pipe with fireplace mortar or a non-combustible sealant.

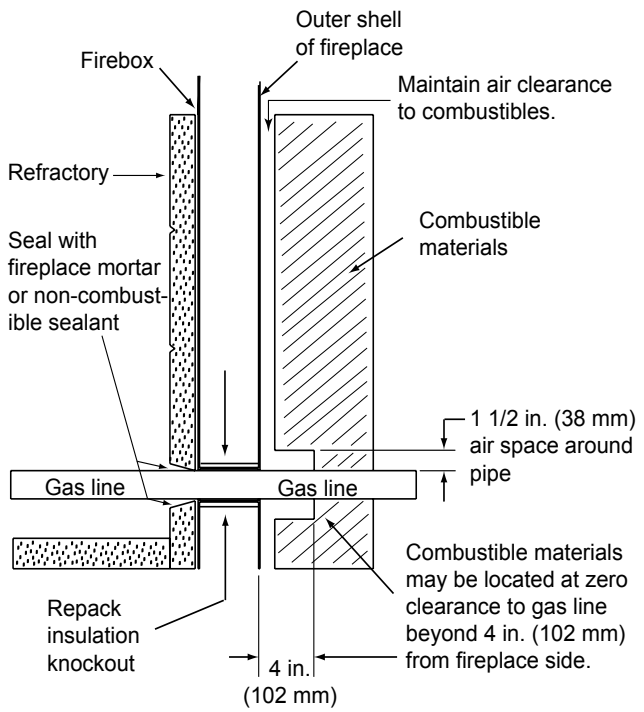

Figure 8.1 Gas Line Installation

9 Reference Materials

A. Chimney Components

Catalog #	Description
CAK4A	Chimney Air Kit
ID4/ID6	Insulated Duct/Outside Air
UD4/UD6	Uninsulated Duct/Outside Air
SL306	Chimney Section - 6 in. (152 mm) long
SL312	Chimney Section - 12 in. (305 mm) long
SL318	Chimney Section - 18 in. (457 mm) long
SL324	Chimney Section - 24 in. (610 mm) long
SL336	Chimney Section - 36 in. (914 mm) long
SL348	Chimney Section - 48 in. (1219 mm) long
CAS8	Attic Shield Kit
SL3	Chimney Stabilizer
SL315	Chimney Offset/Return - 15 deg
SL330	Chimney Offset/Return - 30 deg
FS338	Ceiling Firestop - Straight
FS339	Ceiling Firestop - 15 deg
FS340	Ceiling Firestop - 30 deg
AS8	SL300 Straight Attic Insulation Shield, 24 in. (610 mm)
JB877	Chimney Joint Band
CB876	Chimney Bracket
RF370	Roof Flashing - Flat to 6/12 Pitch
RF371	Roof Flashing - 6/12 to 12/12 Pitch
TR344	Round Termination Cap
TR342-B	Round Telescoping Termination Cap
ST375	Square Termination Cap
TS345	Square Termination Cap
TS345P	Square Termination Cap - Painted
TCT375	Terra Cotta Termination Cap
TR-TVK	TR Top Vent Kit
DTO134 -BK	Short Octagon Decorative Cap - Black
DTO134 -CP	Short Octagon Decorative Cap - Copper
DTO146 -BK	Tall Octagon Decorative Cap - Black
DTO146 -CP	Tall Octagon Decorative Cap - Copper
DTS134 -BK	Short Square Decorative Cap - Black
DTS134 -CP	Short Square Decorative Cap - Copper
DTS146 -BK	Tall Square Decorative Cap - Black
DTS146 -CP	Tall Square Decorative Cap - Copper
LDS33	Decorative Shroud - 3 ft x 3 ft (.91 m x .91 m)
LDS46	Decorative Shroud - 4 ft x 6 ft (1.22 m x 1.83 m)
LDS-BV	Decorative Shroud - 26 in. x 26 in. (660 mm x 660 mm)
	Field Constructed Shrouds (See “Woodburning Term. Cap”)
CT-3A-B	Adapter - May be used with the following caps

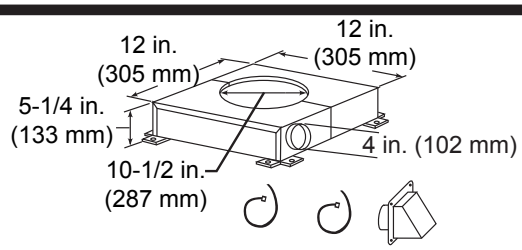

CAK4A Chimney Air Kit

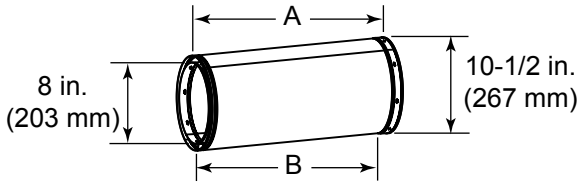

Chimney Sections

Catalog #	A		B	
	in	mm	in	mm
SL306	6	152	4-3/4	121
SL312	12	305	10-3/4	273
SL318	18	457	16-3/4	425
SL324	24	610	22-3/4	578
SL336	36	914	34-3/4	883
SL348	48	1219	46-3/4	1187

A = Actual Length
B = Effective Length (length of chimney part after it has been snapped to another)

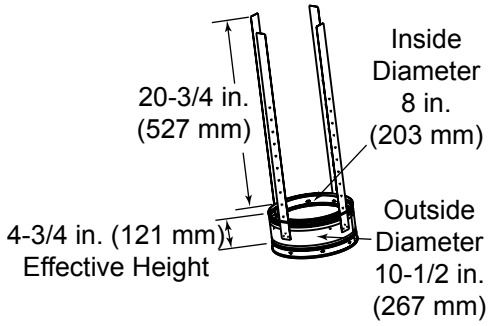

SL3 Chimney Stabilizer

Attic Shield Kit

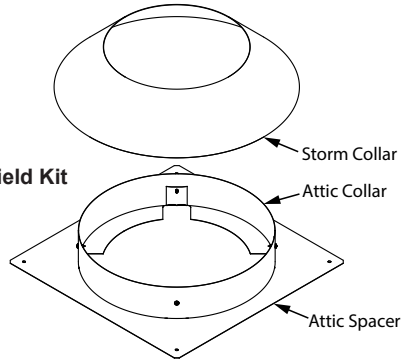

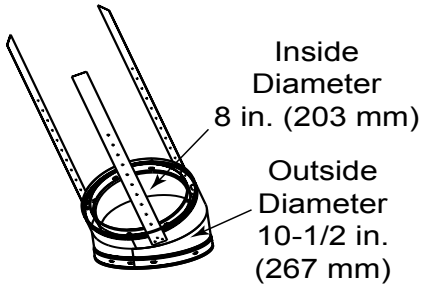

SL315 Chimney Offset/Return - Effective Height 13-3/8in. (380 mm)
SL330 Chimney Offset/Return - Effective Height 15-1/2in. (394 mm)

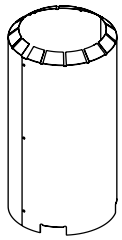

Assembled
Diameter: 14 1/2 in./368 mm
Height: 24 in./610 mm

AS8 Straight Attic Insulation Shield

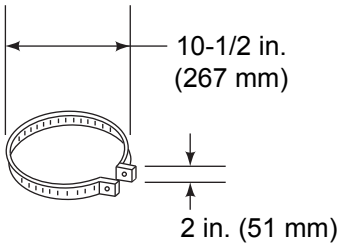

JB877 Chimney Joint Band

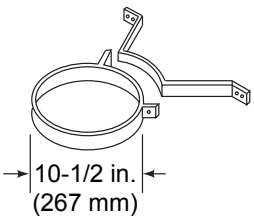

CB876 Chimney Joint Band

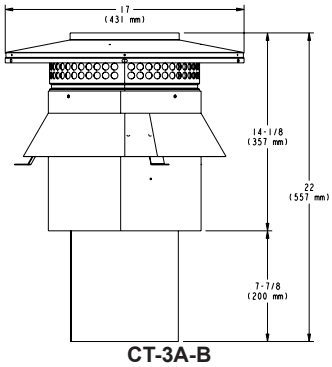

CT-3A-B

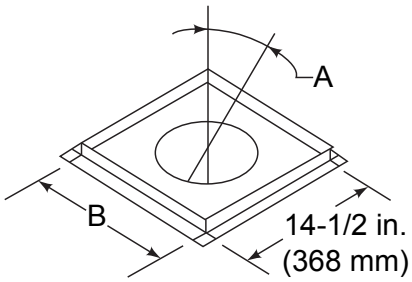

Ceiling Firestop

Catalog #	A	B	
FS338	0-deg.	14-1/2 in.	368 mm
FS339	15-deg.	18-3/8 in.	467 mm
FS340	30-deg.	23 in.	584 mm

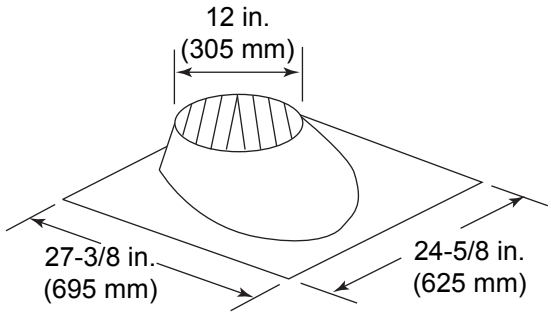

RF370 Roof Flashing

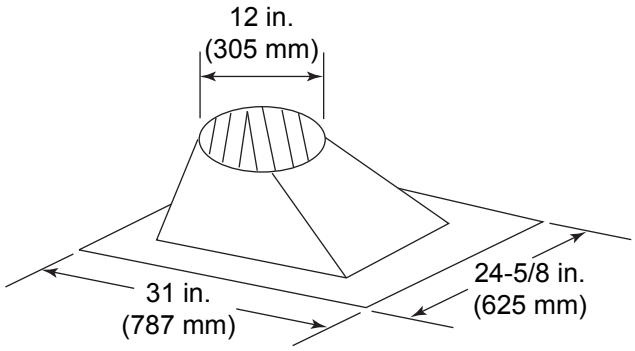

RF371 Roof Flashing

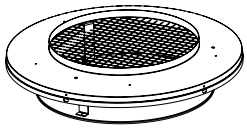

TR-TVK - Top Vent Kit

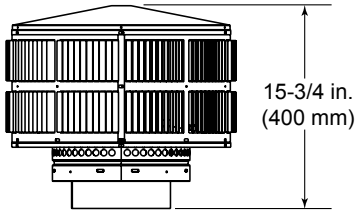

TR344 Round Termination Cap

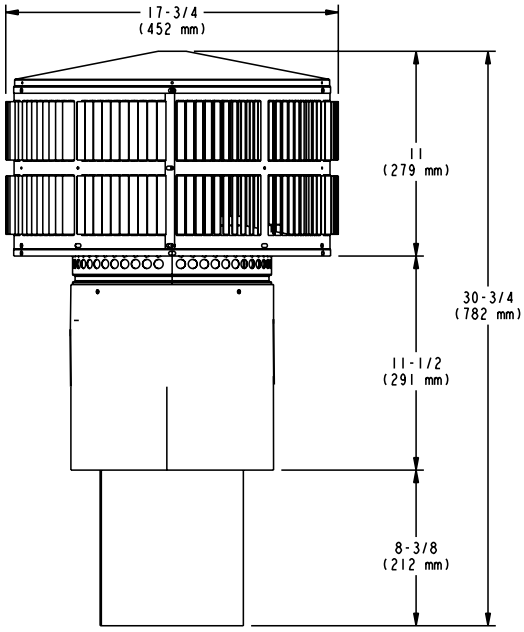

TR342-B Round Telescoping Termination Cap

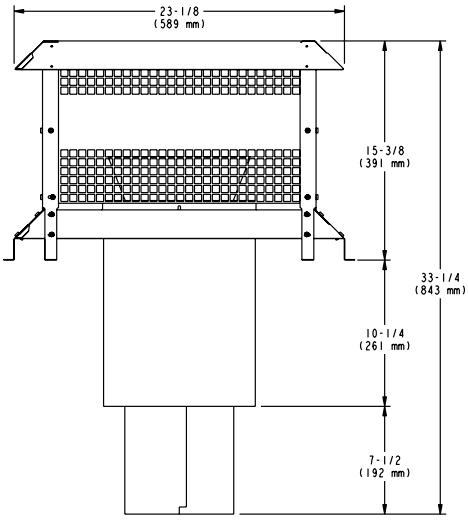

ST375 Square Termination Cap

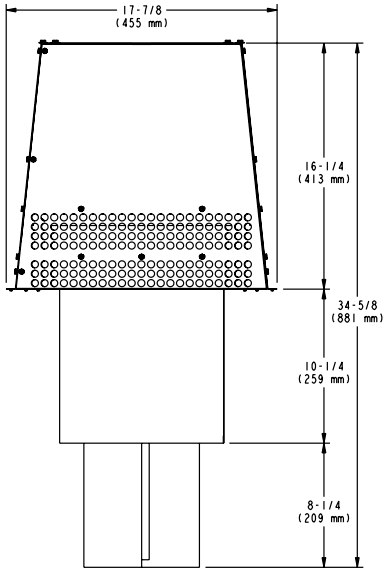

TS345/TS345P Square Termination Cap

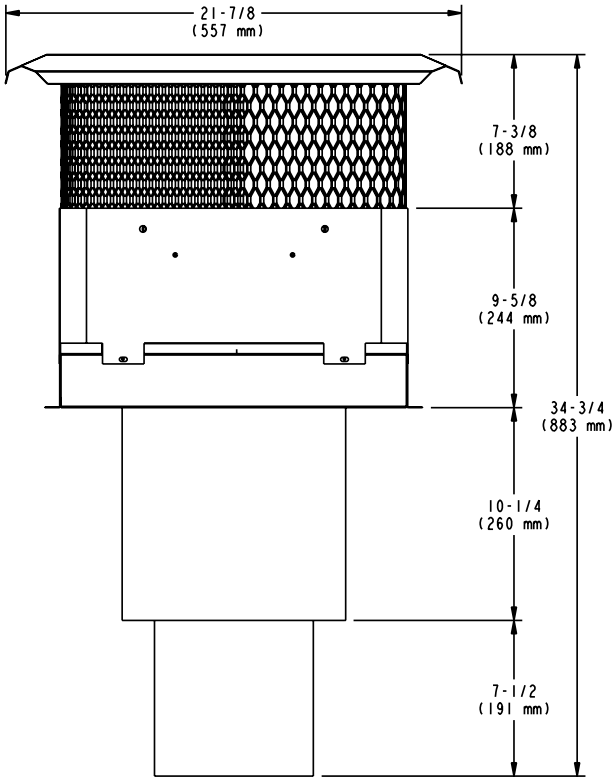

TCT375 Terra Cotta Cap

TR342 - Round Telescoping Termination Cap

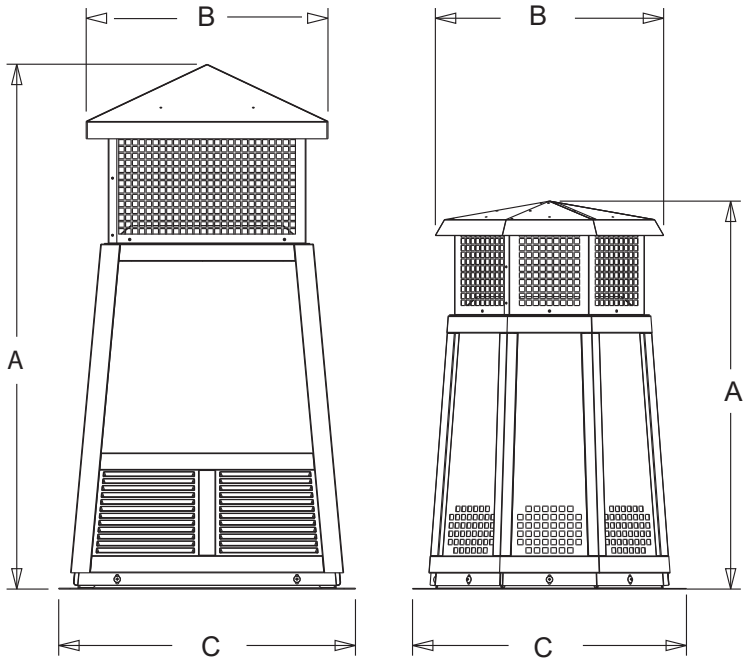

DTS134/146-BK/CP **DTO134/146-BK/CP**

Decorative Caps

DTO134-BK/CP		**A**	**B**	**C**
	in	34	20	24
	mm	864	508	610
DTO146-BK/CP				
	in	46	22-3/4	26
	mm	1168	577	660

DTS134-BK/CP		**A**	**B**	**C**
	in	34	21-3/16	24
	mm	864	538	610
DTS146-BK/CP				
	in	46	21-3/16	26
	mm	1168	538	660

B. Optional Components

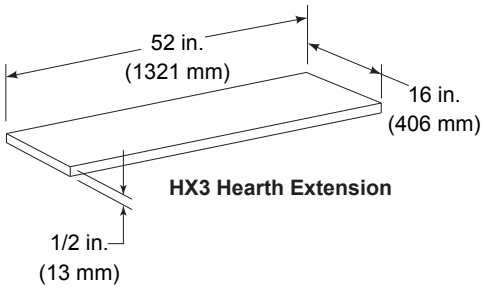

HX3 Hearth Extension

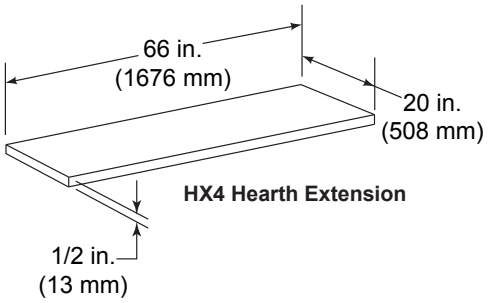

HX4 Hearth Extension

ID4 Insulated Duct 4 in. (102 mm) i.d.
ID6 Insulated Duct 6 in. (152 mm) i.d.

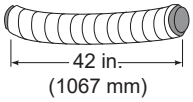

UD4 Uninsulated Duct 4 in. (102 mm) i.d.
UD6 Uninsulated Duct 6 in. (152 mm) i.d.

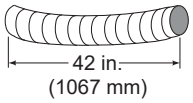

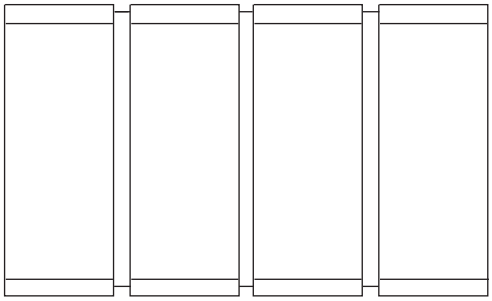

Bifold Glass Doors
DM1036, DM1042

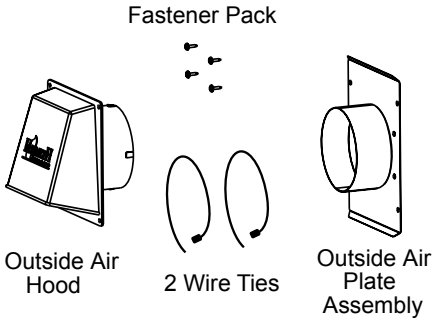

AK24
Outside Air Kit

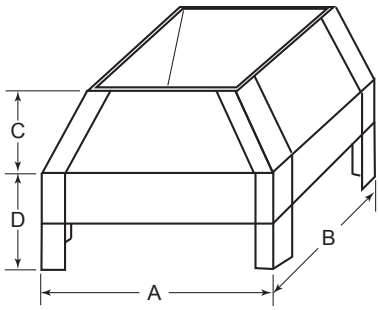

LDS33/LDS46 Decorative Shroud

Catalog #	A		B		C		D	
	in.	*mm*	*in.*	*mm*	*in.*	*mm*	*in.*	*mm*
LDS33	36	914	36	914	8.5	216	11	279
LDS46	48	1219	72	1829	8.5	216	11	279

LDSCP-M - Corner Post Kit (for custom size)

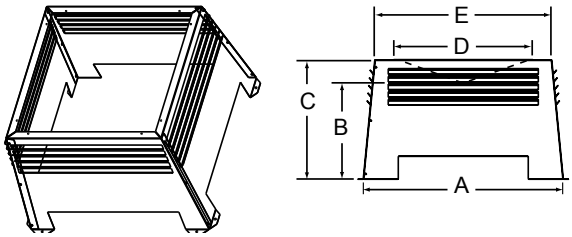

LDS-BV Decorative Shroud

Catalog #		A	B	C	D	E
LDS-BV	*in.*	26	12.5	15.5	22	23
	mm	660	318	394	533	584

Majestic, a brand of Hearth & Home Technologies
7571 215th Street West, Lakeville, MN 55044
www.majesticproducts.com