Place serial number here

Owner's Manual

Operation and Maintenance

***CAUTION! Risk of Fire! DO NOT** store instruction manuals inside fireplace cavity. High temperatures could cause a fire.*

INSTALLER: Leave this manual with the appliance, not inside the appliance.
CONSUMER: Retain this manual for future reference. Do not store inside the appliance.
Contact your dealer with questions regarding installation, operation or service.

***NOTICE: DO NOT** discard this manual!*

Models:
MER36MN
MER42MN

MAJESTIC

GAS-FIRED
C UL US
LISTED

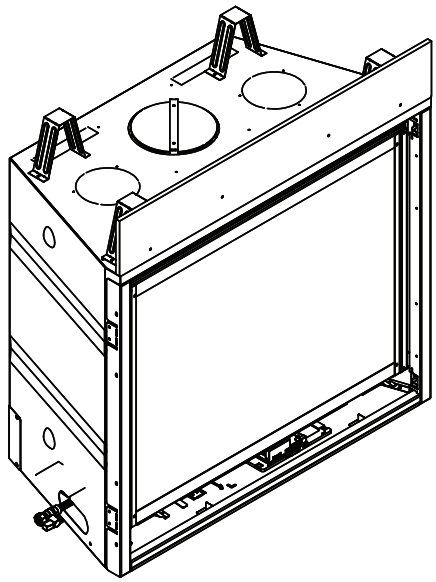

This appliance may be installed as an OEM installation in manufactured home (USA only) or mobile home and must be installed in accordance with the manufacturer's instructions and the *Manufactured Home Construction and Safety Standard, Title 24 CFR, Part 3280* in the United States, or the *Standard for Installation in Mobile Homes, CAN/CSA Z240 MH Series,* in Canada.

This appliance is only for use with the type(s) of gas indicated on the rating plate. This appliance is not convertible for use with other gases, unless a certified kit is used.

Pour demander un exemplaire en français de ce Manuel, visitez www.majesticproducts.com.

⚠ WARNING:
FIRE OR EXPLOSION HAZARD
Failure to follow safety warnings exactly could result in serious injury, death, or property damage.

- **DO NOT** store or use gasoline or other flammable vapors and liquids in the vicinity of this or any other appliance.
- **What to do if you smell gas**
  - **DO NOT** try to light any appliance.
  - **DO NOT** touch any electrical switch. **DO NOT** use any phone in your building.
  - Leave the building immediately.
  - Immediately call your gas supplier from a neighbor's phone. Follow the gas supplier's instructions.
  - If you cannot reach your gas supplier, call the fire department.
- Installation and service must be performed by a qualified installer, service agency, or the gas supplier.

⚠ DANGER

HOT GLASS WILL CAUSE BURNS.

DO NOT TOUCH GLASS UNTIL COOLED.

NEVER ALLOW CHILDREN TO TOUCH GLASS.

A barrier designed to reduce the risk of burns from the hot viewing glass is provided with this appliance and must be installed for the protection of children and other at-risk individuals.

Decorative barrier front must be ordered separately at time of appliance purchase. See Section 3.A.

1 Welcome

Read this manual before operating this appliance.
Please retain this Owner's Manual for future reference.
Read the Installation Manual before making any installation or finishing changes.

A. Congratulations

Congratulations on selecting a Majestic gas fireplace, an elegant and clean alternative to wood burning fireplaces. The Majestic gas fireplace you have selected is designed to provide the utmost in safety, reliability, and efficiency.

As the owner of a new fireplace, you'll want to read and carefully follow all of the instructions contained in this owner's manual. Pay special attention to all cautions and warnings.

This owner's manual should be retained for future reference. We suggest that you keep it with your other important documents and product manuals.

The information contained in this owner's manual, unless noted otherwise, applies to all models and gas control systems.

Your new Majestic gas fireplace will give you years of durable use and trouble-free enjoyment. Welcome to the Majestic family of fireplace products!

Local Dealer Information

DEALER: *Fill in your name, address, phone and email information here and appliance information below.*

Dealer Name: _____

Address: _____

_____

Phone: _____

Email: _____

Appliance Information:

Brand: _____ Model Name: _____

Serial Number: _____ Date Installed: _____

Listing Label Information/Location

The model information regarding your specific fireplace can be found on the rating plate usually located in the control area of the fireplace.

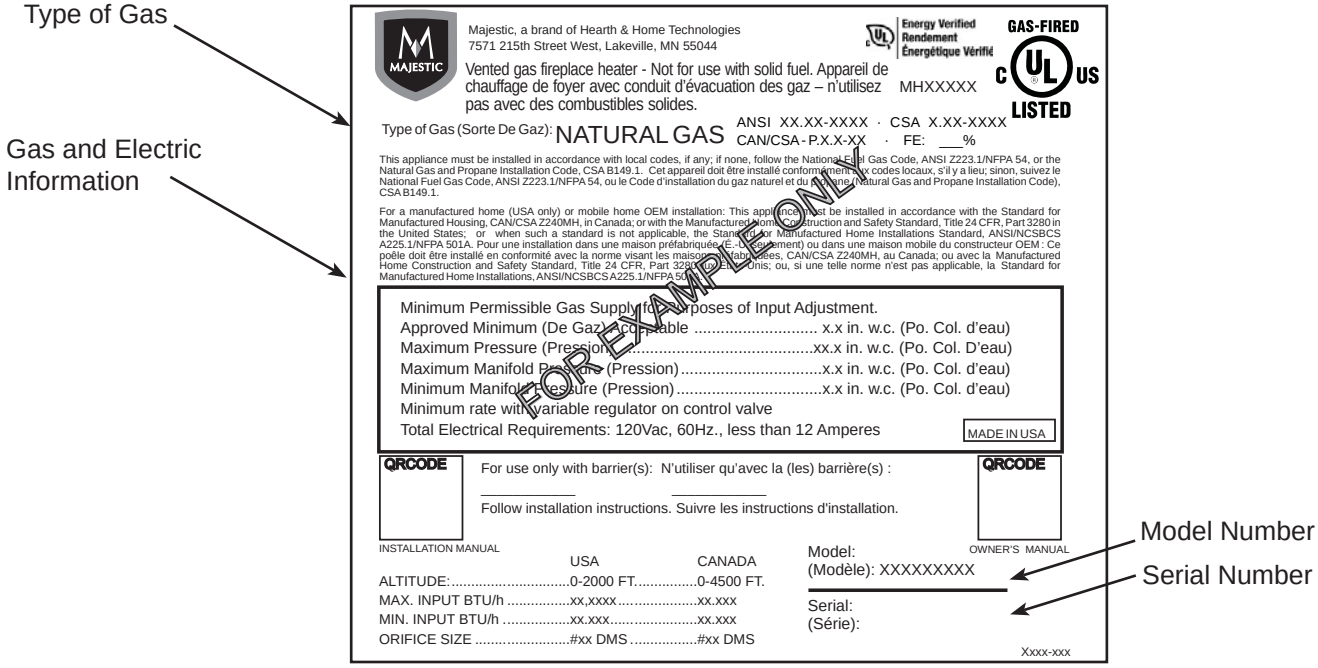

⚠ Safety Alert Key:

- ***DANGER!*** *Indicates a hazardous situation which, if not avoided will result in death or serious injury.*
- ***WARNING!*** *Indicates a hazardous situation which, if not avoided could result in death or serious injury.*
- ***CAUTION!*** *Indicates a hazardous situation which, if not avoided, could result in minor or moderate injury.*
- ***NOTICE:*** *Used to address practices not related to personal injury.*

Note: *The term "recommend" or "recommended" does not indicate a requirement. It is a best practice suggested by Hearth & Home Technologies®.*

Table of Contents

1 Welcome

A. Congratulations 2
B. Limited Warranty 4

2 Product Specific Information

A. Appliance Certification 6
➔ B. Glass Specifications 6
C. BTU Specifications 6

3 Important Safety and Operating Information

A. Appliance Safety 7
B. General Operating Parts 8
➔ C. Fuel Specifications 8
D. Wall and Mantel Temperatures 8
E. Good Faith Wall Surface/TV Guidelines 8
F. Before Lighting Appliance 8
G. Lighting Instructions (IPI) 9
H. Appliance Break-In 10
I. Heat Management 10
J. Operation During A Power Outage (IntelliFire Touch®) . . . 11
K. Detailed Component Operating Instructions
- IntelliFire Touch 12

4 Maintenance and Service

A. Maintenance: Frequency and Tasks 14
B. Maintenance Tasks - Homeowner 14
C. Maintenance Tasks - Qualified Service Technician 16

5 Frequently Asked Questions and Troubleshooting

A. Frequently Asked Questions - Appliance 18
B. Frequently Asked Questions - IntelliFire Touch Controls (Optional IFT-RC400) 19
C. Troubleshooting 20

6 Reference Materials

A. Accessories 22
➔ B. Service Parts 23
C. Contact Information 27

➔ = Contains updated information.

B. Limited Warranty

Hearth & Home Technologies LLC

LIMITED WARRANTY

Hearth & Home Technologies LLC ("HHT") extends the following warranty for HHT gas, wood, pellet and electric hearth appliances (each a "Product" and collectively, the "Product(s)") and certain component parts set forth in the table below ("Component Part(s)") that are purchased from a HHT authorized dealer or distributor.

WARRANTY COVERAGE:

HHT warrants that the Products and their Component Parts will be free from defects in materials and workmanship for the applicable period of Warranty coverage set forth in the table below ("Warranty Period"). If a Product or Component Parts are found to be defective in materials or workmanship during the applicable Warranty Period, HHT will, at our discretion, repair the applicable Component Part(s), replace the applicable Component Part(s), or refund the purchase price of the applicable Product(s). The maximum amount recoverable under this Warranty is limited to the purchase price of the Product. This Warranty is transferable from the original purchaser to subsequent owners, but the Warranty Period will not be extended in duration or expanded in coverage for any such transfer. This Warranty is subject to conditions, exclusions, and limitations as described below.

WARRANTY PERIOD:

Warranty coverage begins at the date of installation. In the case of new home constructions, Warranty coverage begins six months after invoice of the final sale of the Product(s) by an independent, authorized HHT dealer or distributor. However, the Warranty coverage shall commence no later than 24 months following the date of Product shipment from HHT, regardless of the installation or purchase date.

Warranty Period		**HHT Manufactured Appliances and Venting**				
Component Parts	Labor	Gas	Pellet	Wood	Electric	Component Parts Covered by this Warranty
1 Year		X	X	X		All parts including handles, external enameled components and other material except as covered by Warranty Conditions, Warranty Exclusions, and Warranty Limitations listed
2 Years					X	All parts except as covered by Warranty Conditions, Warranty Exclusions, and Warranty Limitations listed
			X	X		Glass, Electrical components limited to heating element/igniters, Top feed auger assembly, Blowers, Junction Box, Remotes/Wall switches, linear actuator, power cord, vacuum switch, snap disc, wire harnesses and thermocouple
		X				Electrical components limited to modules, remotes/wall switches, valves, pilots, blowers, junction boxes, wire harnesses, transformers and lights (excluding light bulbs)
		X		X		Cement Refractory Panels, Glass Liner Panels
3 years			X			Firepots, burnpots, Harman mechanical feeders
5 years		X		X		Catalysts, Vented and Vent Free burners and logs
10 years	1 year	X				Burners, logs and metal/fiber refractory components of HHT manufactured fireplaces or stoves, venting due to poor workmanship
10 years	3 years		X	X		Castings, Medallions & Baffles, FlexBurn® System (engine, inner cover, access cover and fireback), Firebox and heat exchanger, HHT Chimney & Terminations, Manifolds
20 years	3 years	X				Firebox and heat exchanger
All purchased replacement parts and optional accessories						
1 Year	None	X	X	X	X	All purchased replacement parts and optional accessories

4021-645N 12/23

Page 1 of 2

B. Limited Warranty *(continued)*

WARRANTY CONDITIONS:

- Because HHT cannot control the quality of any Products sold by unauthorized sellers, this Warranty only covers Products that are purchased through an HHT authorized dealer or distributor unless otherwise prohibited by law; a list of HHT authorized dealers is available on the HHT branded websites.
- This Warranty is only valid while the applicable Product remains at the site of original installation.
- This Warranty is only valid in the country in which the HHT authorized dealer or distributor that sold the applicable Product is authorized to sell applicable Product.
- Contact your installing distributor or dealer for Warranty service. If the installing dealer or distributor is unable to provide necessary parts, contact the nearest HHT authorized dealer or supplier. Additional service fees may apply if you are seeking Warranty service from a dealer other than the dealer from whom you originally purchased the applicable Product.
- No HHT consumer should bear cost of warranty service or costs incurred while servicing warranty claims (i.e., travel, gas, or mileage) when the service is performed within the terms of this Warranty. Check with your dealer or distributor in advance for any costs to you when arranging a warranty call. Travel and shipping charges for parts are not covered by this Warranty.

WARRANTY EXCLUSIONS:

This Warranty does not cover the following:

- Changes in surface finishes as a result of normal use. As a heating appliance, some changes in color of interior and exterior surface finishes may occur. This is not a flaw and is not covered under the Warranty.
- Damage to printed, plated, or enameled surfaces caused by fingerprints, accidents, misuse, scratches, melted items or other external sources and residues left on the plated surfaces from the use of abrasive cleaners or polishes.
- Repair or replacement of parts that are subject to normal wear and tear during the Warranty Period are not covered. These parts include: paint, wood and pellet gaskets, firebricks, wood grates, flame guides, batteries and the discoloration of glass.
- Minor expansion, contraction, or movement of certain parts causing noise. These conditions are normal and complaints related to this noise are not covered by this Warranty.
- Damages resulting from: (1) failure to install, operate, or maintain the applicable Product in accordance with the installation instructions, operating instructions, and listing agent identification label furnished with the applicable Product; (2) failure to install the applicable Product in accordance with local building codes; (3) shipping or improper handling; (4) improper operation, abuse, misuse, continued operation with damaged, corroded or failed components, accident, or improperly/incorrectly performed repairs; (5) environmental conditions, inadequate ventilation, negative pressure, or drafting caused by tightly sealed constructions, insufficient make-up air supply, or handling devices such as exhaust fans or forced air furnaces or other such causes; (6) use of fuels other than those specified in the operation instructions; (7) installation or use of components not supplied with the applicable Product or any other components not expressly authorized and approved by HHT; (8) modification of the appliance not expressly authorized and approved by HHT in writing; and/or (9) interruptions or fluctuations of electrical power supply to the applicable Product.
- Non-HHT venting components, hearth connections or other accessories used in conjunction with the applicable Product.
- Any part of a pre-existing fireplace system in which an insert or a decorative gas applicable Product is installed.
- HHT's obligation under this Warranty does not extend to the Product's capability to heat the desired space. Information is provided to assist the consumer and the dealer in selecting the proper Product for the application. Consideration must be given to the Product location and configuration, environmental conditions, insulation and air tightness of the structure.

This warranty is void if:

- The applicable Product has been over-fired, operated in atmospheres contaminated by chlorine, fluorine, or other damaging chemicals. Over-firing can be identified by, but not limited to, warped plates or tubes, deformation/warping of interior cast iron structure or components, rust colored cast iron, bubbling, cracking and discoloration of steel or enamel finishes.
- The applicable Product is subjected to prolonged periods of dampness or condensation.
- There is any damage to the applicable Product due to water or weather damage which is the result of, but not limited to, improper chimney or venting installation.

LIMITATIONS OF REMEDIES AND LIABILITY:

- **EXCEPT TO THE EXTENT PROVIDED BY LAW, HHT MAKES NO EXPRESS WARRANTIES OTHER THAN THE WARRANTY SPECIFIED HEREIN. The owner's exclusive remedy and HHT's sole obligation under this Warranty or in contract, tort or otherwise, shall be limited to, at HHT's sole option, replacement of the Component Part(s), repair of the Component Part(s), or refund of the original purchase price of the applicable Product(s). In no event will HHT be liable for any incidental or consequential damages caused by defects in the applicable Product. Some States do not allow the exclusion or limitation of incidental or consequential damages, so the above limitation or exclusion may not apply to you. This Warranty gives you specific legal rights and you may also have other rights which vary from State to State. THE DURATION OF ANY IMPLIED WARRANTY IS LIMITED TO DURATION OF THE EXPRESSED WARRANTY SPECIFIED ABOVE FOR THE APPLICABLE PRODUCT. Some States do not allow limitations on how long an implied warranty lasts, so the above limitation may not apply to you.**

2 Product Specific Information

A. Appliance Certification

MODELS: **MER36MN, MER42MN**

LABORATORY: **Underwriters Laboratories, Inc. (UL)**

TYPE: **Direct Vent Heater**

STANDARD: **CSA / ANSI Z21.88-2019 • CSA 2.33-2019**

This product is listed to ANSI standards for "Vented Gas Fireplace Heaters" and applicable sections of "Gas Burning Heating Appliances for Manufactured Homes and Recreational Vehicles", and "Gas Fired Appliances for Use at High Altitudes". Also Certified for Installation in a Bedroom or a Bedsitting Room.

NOTICE: *This installation must conform with local codes. In the absence of local codes you must comply with the National Fuel Gas Code, ANSI Z223.1-latest edition in the U.S.A. and the CAN/CGA B149 Installation Codes in Canada.*

NOT INTENDED FOR USE AS A PRIMARY HEAT SOURCE. This appliance is tested and approved as either supplemental room heat or as a decorative appliance. It should not be factored as primary heat in residential heating calculations.

Installation and service of this appliance should be performed by qualified personnel. Hearth & Home Technologies recommends HHT Factory Trained or NFI certified professionals.

hearthED FACTORY TRAINING Fuel Your Fire

NFI NATIONAL FIREPLACE INSTITUTE® A CERTIFICATION AGENCY

B. Glass Specifications

This appliance is equipped with ceramic glass. Replace glass only with ceramic glass. Please contact your dealer for replacement glass.

C. BTU Specifications

Models *(U.S. or Canada)*		Maximum Input BTU/h	Minimum Input BTU/h	Orifice Size (DMS)
MER36MN (NG)	*(0-2000 ft)*	34,000	17,000	#35
MER42MN (NG)	*(0-2000 ft)*	36,000	18,000	#32

3 Important Safety and Operating Information

A. Appliance Safety

WARNING! DO NOT operate fireplace before reading and understanding operating instructions. *Failure to operate fireplace according to operating instructions could cause fire or injury.*

DANGER

HOT GLASS WILL CAUSE BURNS.

DO NOT TOUCH GLASS UNTIL COOLED.

NEVER ALLOW CHILDREN TO TOUCH GLASS.

- Keep children away.
- CAREFULLY SUPERVISE children in same room as fireplace.
- Children and adults should be alerted to the hazards of high surface temperatures and should stay away to avoid burns or clothing ignition.

High temperatures may ignite clothing or other flammable materials.

- Clothing, furniture, draperies, and other flammable materials must not be placed on or near the appliance.

A barrier designed to reduce the risk of burns from the hot viewing glass is provided with this appliance and must be installed for the protection of children and other at-risk individuals. DO NOT operate the appliance with the barrier removed. If the barrier becomes damaged, the barrier must be replaced with the manufacturer's barrier for this appliance.

Contact your dealer or Hearth & Home Technologies if the barrier is not present or help is needed to properly install one.

WARNING! Choking Hazard! *Keep rock media out of reach of children.*

- Young children should be carefully supervised when they are in the same room as the appliance. Toddlers, young children and others may be susceptible to accidental contact burns.

  A physical barrier is recommended if there are at risk individuals in the house. To restrict access to a fireplace or stove, install an adjustable safety gate to keep toddlers, young children and other at risk individuals out of the room and away from hot surfaces.
- Install a switch lock or a wall/remote control with child protection lockout feature.
- Keep remote controls out of reach of children.
- Never leave children alone near a hot fireplace, whether operating or cooling down.
- Teach children to NEVER touch the fireplace.
- Consider not using the fireplace when children will be present.

Contact your dealer for more information, or visit: www.hpba.org/Product-Info/Fireplace-Stove-Heater/Glass-Fronts-Safety.

To prevent unintended operation when not using your fireplace for an extended period of time (summer months, vacations, trips, etc):

- Remove batteries from remote controls.
- Turn off wall controls.
- Unplug 6 volt adapter plug and remove batteries.
- Set the selector switch on the control module to the OFF position and remove batteries.

WARNING: This product and the fuels used to operate this product (liquid propane or natural gas), and the products of combustion of such fuels, can expose you to chemicals including benzene, which is known to the State of California to cause cancer and reproductive harm. For more information go to: www.P65Warnings.ca.gov.

Clear Space

WARNING! DO NOT *place combustible objects in front of the fireplace or block fireplace openings. High temperatures could start a fire. See Figure 3.1.*

Avoid placing candles and other heat-sensitive objects on mantel or hearth. Heat could damage these objects.

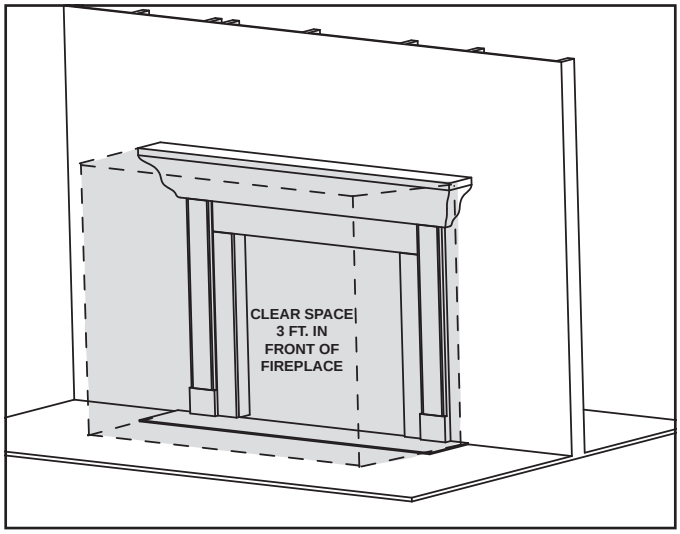

Figure 3.1 Clear Space Requirement - All Models

B. General Operating Parts

Figure 3.2 references the general operating parts of the appliance and the section of this manual in which they are discussed.

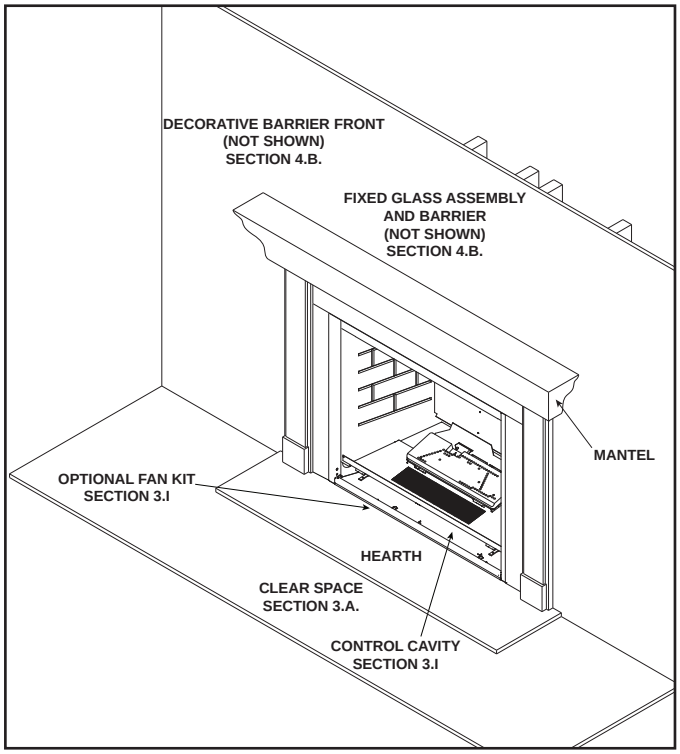

Figure 3.2 General Operating Parts

C. Fuel Specifications

WARNING! Risk of Fire or Explosion! *Appliance must be set up for compatible gas type!*

- This appliance is designed to operate on either natural gas. Make sure the appliance is compatible with gas type selected for installation site.

D. Wall and Mantel Temperatures

ANSI/CSA Standards

The American National Standards Institute (ANSI) and Canadian Standards Association (CSA) write the safety and performance standards to which all gas fireplaces are tested. The following are the allowable temperatures around and on a gas fireplace per the ANSI/CSA standards:

Combustible Mantel and Surfaces around a Fireplace

The allowable temperature rise above ambient is 117°F for all exposed combustible surfaces around the fireplace, including the mantel, when installed according to the installation instructions. Non-combustible surfaces and mantels do not have a maximum temperature limit; however the installation instructions must still be followed for any restrictions on placement of non-combustible materials on or around the fireplace.

> Example: The mantel above a fireplace in a room that is 70°F is allowed to reach but not exceed 187°F (70°F+117°F = 187°F).

E. Good Faith Wall Surface/TV Guidelines

If installing a television (TV) above the appliance, see appliance Installation Manual Section 2.B and 10.C.

F. Before Lighting Appliance

Before operating this fireplace for the first time, **it is recommended that a qualified service technician**:

- Verify all shipping materials have been removed from inside and/or underneath the firebox.
- Review proper placement of logs, ember material and/or other decorative materials.
- Check the wiring.
- Check the air shutter adjustment.
- Ensure that there are no gas leaks.
- Ensure that the glass is sealed and in the proper position and that the integral barrier is in place.

WARNING! Risk of Fire or Asphyxiation! DO NOT *operate fireplace with fixed glass assembly removed.*

G. Lighting Instructions (IPI)

FOR YOUR SAFETY READ BEFORE LIGHTING

WARNING: If you do not follow these instructions exactly, a fire or explosion may result causing property damage, personal injury or loss of life.

A. This appliance is equipped with an intermittent pilot ignition (IPI) device which automatically lights the burner. **DO NOT** try to light the burner by hand.

B. **BEFORE LIGHTING**, smell all around the appliance area for gas. Be sure to smell next to the floor because some gas is heavier than air and will settle on the floor.

WHAT TO DO IF YOU SMELL GAS

- **DO NOT** try to light any appliance.
- **DO NOT** touch any electric switch; do not use any phone in your building.
- Immediately call your gas supplier from a neighbor's phone. Follow the gas supplier's instructions.
- If you cannot reach your gas supplier, call the fire department.

C. Use only your hand to push in or turn the gas control knob. Never use tools. If the knob will not push in or turn by hand, **DO NOT** try to repair it, call a qualified service technician. Force or attempted repair may result in a fire or explosion.

D. **DO NOT** use this appliance if any part has been under water. Immediately call a qualified service technician to inspect the appliance and to replace any part of the control system and any gas control which has been under water.

LIGHTING INSTRUCTIONS (IPI)

1. This appliance is equipped with an ignition device which automatically lights the burner. DO NOT try to light the burner by hand.

GAS VALVE

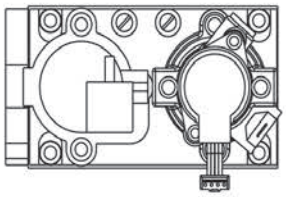

2. Wait five (5) minutes to clear out any gas. Then smell for gas, including near the floor. If you smell gas, STOP! Follow "B" in the Safety Information located on the top of this label. If you do not smell gas, go to next step.
3. To light the burner:
   Equipped with wall switch: Turn ON/OFF switch to ON.
   Equipped with remote or wall control: Press ON or FLAME button.
   Equipped with thermostat: Set temperature to desired setting.
4. If the appliance does not light after three tries, call your service technician or gas supplier.

TO TURN OFF GAS TO APPLIANCE

1. Equipped with wall switch: Turn ON/OFF switch to OFF.
   Equipped with remote or wall control: Press OFF button.
   Equipped with thermostat: Set temperature to lowest setting.
2. Service technician should turn off electric power to the control when performing service.

DANGER

HOT GLASS WILL CAUSE BURNS.
DO NOT TOUCH GLASS UNTIL COOLED.
NEVER ALLOW CHILDREN TO TOUCH GLASS.

A barrier designed to reduce the risk of burns from the hot viewing glass is provided with this appliance and must be installed for the protection of children and other at-risk individuals.

WARNING:

DO NOT CONNECT LINE VOLTAGE (110/120 VAC OR 220/240 VAC) TO THE CONTROL VALVE.

Improper installation, adjustment, alteration, service or maintenance can cause injury or property damage. Refer to the owner's information manual provided with this appliance. For assistance or additional information, consult a qualified installer, service agency or the gas supplier.

This appliance needs fresh air for safe operation and must be installed so there are provisions for adequate combustion and ventilation air.

WARNING: This product and the fuels used to operate this product (liquid propane or natural gas), and the products of combustion of such fuels, can expose you to chemicals including benzene, which is known to the State of California to cause cancer and reproductive harm. For more information go to: www.P65Warnings.ca.gov.

Keep burner and control compartment clean. See installation and operating instructions accompanying appliance.

CAUTION:

Hot while in operation. DO NOT touch. Keep children, clothing, furniture, gasoline and other liquids having flammable vapors away.

DO NOT operate the appliance with fixed glass assembly removed, cracked or broken. Replacement of the fixed glass assembly should be done by a licensed or qualified service person.

NOT FOR USE WITH SOLID FUEL

For use with natural gas and propane. A conversion kit, as supplied by the manufacturer, shall be used to convert this appliance to the alternate fuel.

Also Certified for Installation in a Bedroom or a Bedsitting Room.

This appliance must be installed in accordance with local codes, if any; if none, follow the *National Fuel Gas Code, ANSIZ223.1/ NFPA 54, or the National Gas and Propane Installation code, CSA B149.1.*

For additional information on operating your Hearth & Home Technologies fireplace, please refer to www.hearthnhome.com.

593-913K

H. Appliance Break-In

NOTICE! Open windows for air circulation during fireplace break-in.

- *Some people may be sensitive to smoke and odors.*
- *Smoke detectors may activate.*

Follow the initial break-in procedure below to cure the materials used to manufacture the fireplace and the finishing materials around it.

- The fireplace should be run three to four hours continuously on high.
- Turn the fireplace off and allow it to cool completely.
- Remove fixed glass assembly. See Section 4.B.
- Clean fixed glass assembly. See Section 4.B.
- Replace the fixed glass assembly.

Note: Some installations may require additional run time to cure. If odors persist after the initial break-in period, run the fireplace for an additional three to four hours continuously on high.

Note: IPI systems have a safety feature that automatically shuts down the fireplace after 9 hours of continuous operation without receiving a command from the remote control. If this occurs, restart the appliance.

I. Heat Management

Heat Output

- Heat output may be controlled on these models by adjusting the “Flame Height” setting on the remote control.
- Fan speed may be controlled using the “Fan Speed” setting on the remote control.

Optional Heat Management Systems

An optional heat management system, which allows the heat from the appliance to be redirected as desired, may be installed with this appliance. It may be either a HEAT-ZONE®-GAS, which diverts heat into an adjacent room, and/or a HEAT-OUT-GAS which will divert heat outside the home/building, and/or a Passive Heat kit which disperses the heat into the same room as the fireplace.

Refer to Section 6 of the appliance installation manual to confirm which of the heat management systems may be installed together. All heat management systems must be installed by a qualified service technician at the time of appliance installation.

Optional HEAT-ZONE®-GAS Kit
The HEAT-ZONE®-GAS heat management option is available for use with these appliance models. The Heat-Zone Kit draws heat from your fireplace to an adjacent room in your home, up to 20 feet away.

Optional HEAT-OUT-GAS Kit
The HEAT-OUT-GAS heat management option is available for use with these appliance models and is operated with a wall switch, included in the kit. The Heat-Out-Gas kit draws heat from your fireplace and directs it outside, up to 25 feet away.

Optional Passive Heat Kit (PH-MR)
The Passive Heat heat management option is available for use with these appliance models. The Passive Heat Kit allows the heat to be vented into the room through one front discharge, two side discharges or an open top discharge while the fireplace is in operation. Passive Heat can be used in conjunction with HEAT-ZONE®-GAS or HEAT-OUT-GAS kit.

Note: When a fan is operated with the Passive Heat system, there will be a decrease in the amount of air flowing from the appliance opening. Air will be flowing from both the appliance opening and the passive heat opening.

J. Operation During A Power Outage (IntelliFire Touch®)

The IntelliFire Touch® intermittent pilot ignition system comes with a battery backup system that enables the system to operate in a power outage. The system offers seamless transition from household AC power to battery backup. See appliance manual bag for battery pack. Batteries should not be placed in the battery pack while using electrical power to operate the fireplace. Remove batteries from battery pack when power has been restored and remove battery pack from the appliance.

Battery longevity and performance will be affected by long term exposure to the service temperatures of this appliance.

NOTICE: *Batteries should only be used as a power source in the event of an emergency power outage. Batteries should not be used as a primary long-term power source. Batteries tend to corrode over time.*

To Operate Fireplace Using Battery Power (DC):

1. Access the control cavity of the appliance. See Figure 3.3 for location. The decorative barrier front and front refractory may need to be removed.
2. Insert four AA cell batteries into battery tray. Battery polarity must be correct or module damage will occur. See Figure 3.3. A complete wiring diagram is included in the Electrical section of the appliance Installation Manual.
3. Turn the appliance on according to the instructions below for the appropriate type of control:

Wall Switch:

- Toggle the switch as you would under normal circumstances.

Wireless Remote:

- Remote receiver is integrated into the ignition module
- Use the remote to turn the appliance on.
- To preserve battery life, do not use the HI/LO flame or THERMOSTAT options.

Ignition Module:

- Locate the ignition module in the control cavity.
- Slide the ON/REMOTE/OFF switch to the ON position.

NOTICE: *Some functionality will be lost when using battery backup including fan, lights, or any other auxiliary functions that require household 110-120 VAC power.*

To Return to Operation Using Electrical (AC) Power

Wall Switch:

- Toggle the switch to OFF and remove the batteries from the battery tray. Replace decorative barrier front on appliance.

Wireless Remote:

- Slide the ON/REMOTE/OFF switch to the REMOTE position. Remove the batteries from the battery tray. Replace decorative barrier front on appliance.

Ignition Module:

- Slide the ON/REMOTE/OFF switch to the REMOTE position.

  Remove the batteries from the battery tray. Replace decorative barrier front on appliance.

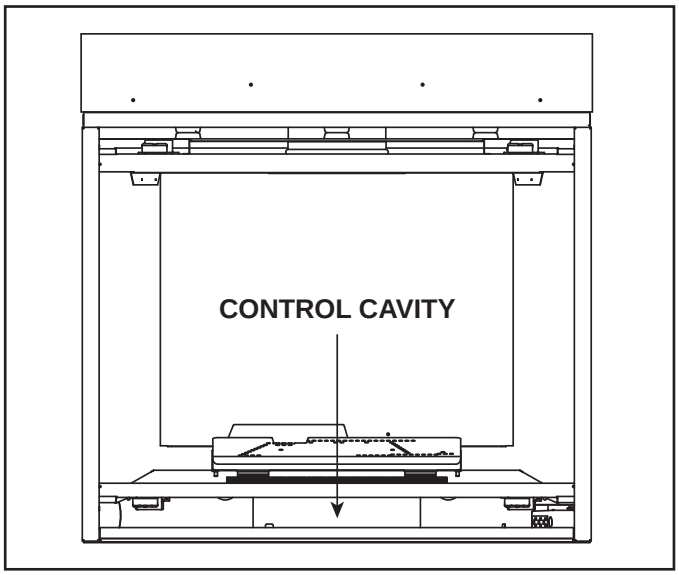

3.3 Control Cavity / Battery Pack Location

K. Detailed Component Operating Instructions - IntelliFire Touch

IFT-ECM Detailed Operating Instruction

The IFT-RC400 and IFT-RC150 remotes are an option for this model. The IntelliFire Wi-Fi module (IFT-WFM) is also an option.

1. The Electronic Control Module (IFT-ECM) has a three-position ON/OFF/REMOTE selector switch that must be set for proper operation. See Figure 3.4. When changing switch positions, it is important to pause in each position for 1-2 seconds.

   OFF Position:

   The appliance will not respond to any commands from a wired wall switch, IFT-RC150 or IFT-RC400 remote controls. The unit should be in the OFF position during service, fuel conversion, and to reset the IFT-ECM in the event the system goes into a LOCK-OUT mode as the result of a system error. When switched to the OFF position while the appliance is operating, the system will shut down.

   ON Position:

   The appliance will ignite and run continuously at the HI flame setting. No adjustment in flame height is possible.

   Remote Position:

   The remote position allows operation of the appliance from a wired wall switch, IFT-RC400 or IFT-RC150 remote controls. The IFT-ECM switch must be in this position to pair the IFT-ECM with the IFT-ACM (if installed), and/or IFT-RC400 and IFT-RC150 remote controls. See the IFT-RC400 or IFT-RC150 installation manual for detailed instructions on pairing the IFT-ECM with the remote controls. After successfully pairing a IFT-RC400, all installed accessories can be controlled by the IFT-RC400 (see IFT-RC400 user manual). The RC150 allows the user to turn ON/OFF the flame in the appliance and activate the Cold Climate mode if desired. The IFT-ECM has a safety feature that will automatically shut down the fireplace after 9 hours of continuous operation without receiving a command from the IFT-RC400 or IFT-RC150.

The IFT-ECM has a safety feature that will automatically shut down the fireplace after 9 hours of continuous operation in the ON position, except when operated in active thermostat mode.

2. If multiple control options are installed, the IFT-ECM will respond to the last command from the wired wall switch, IFT-RC400 or IFT-RC150. The wired wall switch is NOT available if a Power Vent is used.

The Pilot button on the IFT-ECM activates the Cold Climate function of the fireplace. This function lights the pilot flame ONLY to provide enough heat in the firebox to reduce condensation in cool, high humidity ambient conditions. To activate the Cold Climate press and hold the Pilot button for one second and release. The IFT-ECM will flash two green LED blinks, beep twice and light and rectify the pilot flame when pressed to activate. To turn off Cold Climate, press and hold the Pilot button for one second and release. The IFT-ECM will flash one green LED blink, beep once and shut down the pilot flame. If remote controls are paired with the IFT-ECM, this feature can also be activated with the IFT-RC400 and/or IFT-RC150. The cold climate function will turn off after seven days of continuous operation.

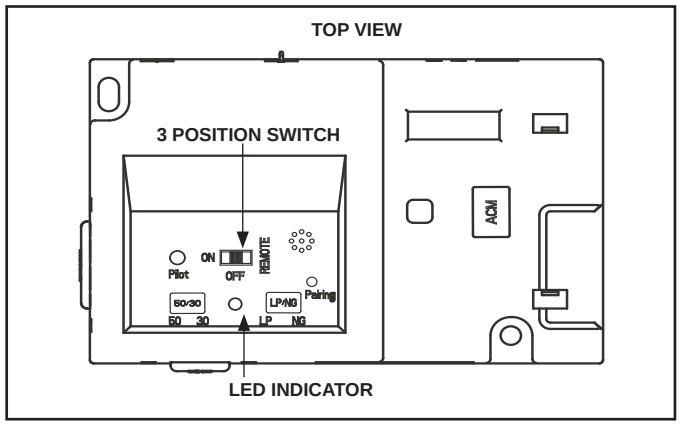

Figure 3.4 IFT-ECM

DANGER

Risk of Explosion

DO NOT cycle the ON/OFF/REM selector switch more than one time within a five minute period. Gas may accumulate in firebox. Call a qualified service technician.

4. An IFT-ECM reset is required if the module is in a lock-out condition. When this occurs, the appliance is shut down and the IFT-ECM status indicator LED will be blinking a RED/GREEN error code along with a one-time audible double- beep. If the IFT-ECM is in a lock-out condition, refer to the troubleshooting chart to interpret the error code and take corrective action as required. To reset the IFT-ECM after a lock-out error:

CAUTION! Risk of burns! *Appliance surfaces are hot when operating and during cool down. Use care and wear gloves when opening the front and accessing components inside the appliance.*

- Be aware the appliance may be HOT, use care in accessing the IFT-ECM.

- Set the IFT-ECM 3-position selector switch to OFF position.
- Wait five (5) minutes to allow possible accumulated gas to clear.
- Set the IFT-ECM 3-position selector switch to ON or REMOTE position. Module will beep once and flash a three GREEN LED code on successful startup.
- If placed in ON position, the appliance will ignite normally if the error condition was corrected.
- If placed in REMOTE position, use the paired IFT-RC400, IFT-RC150 or wired wall switch to start the appliance; appliance will ignite normally if the error condition was corrected.
- If the IFT-ECM re-enters the lock-out condition after these steps, call your dealer for service.

Wi-Fi (Optional)

If desired, a Wi-Fi module (IFT-WFM) may be added to allow the appliance to be run via an app. Contact your dealer to order.

Fan Kit (Optional)

If desired, a fan kit may be added. Contact your dealer to order the correct fan kit.

Appliance ON/OFF:

A wall control, thermostat or remote control may be used to control the ON/OFF function of the appliance. Follow instructions included with the installed control.

4 Maintenance and Service

IMPORTANT! Any safety screen, decorative barrier front or guard removed for servicing must be replaced prior to operating the fireplace.

When properly maintained, your fireplace will give you many years of trouble-free service. **Contact your dealer** to answer questions regarding proper operation, trouble-shooting and service for your appliance. Visit www.majesticproducts.com to locate a dealer. We recommend annual service by a qualified service technician.

A. Maintenance: Frequency and Tasks

Task	Frequency	To be completed by
Glass Cleaning	Seasonally	Homeowner
Decorative Barrier Fronts	Annually	
Optional Remote Control	Seasonally	
Termination Cap	Seasonally	
Gasket Seal and Glass Assembly Inspection	Annually	Qualified Service Technician
Log Inspection	Annually	
Firebox Inspection	Annually	
Control Compartment & Firebox Top	Annually	
Pilot and Burner Ignition and Operation	Annually	
Interior Ceramic Glass Panel Cleaning	Seasonally	
Electrical Service and Repair	As needed	

B. Maintenance Tasks - Homeowner

Installation and repair should be done by a qualified service technician only. The appliance should be inspected before use and at least annually by a professional service person.

The following tasks may be performed annually by the homeowner. If you are uncomfortable performing any of the listed tasks, please call your dealer for a service appointment.

More frequent cleaning may be required due to excessive lint from carpeting, bedding material, etc. It is imperative that control compartments, burners and circulating air passageways of the appliance be kept clean. Any safety screen, guard, or barrier removed for servicing the appliance must be replaced prior to operating the appliance.

CAUTION! Risk of Burns! *The fireplace shall be turned off and cooled before servicing.*

Glass Cleaning

Frequency: Seasonally

By: Homeowner

Tools Needed: Protective gloves, gas fireplace glass cleaner, drop cloth and a stable work surface.

CAUTION! Handle fixed glass assembly with care. *Glass is breakable.*

- *Avoid striking, scratching or slamming glass*
- ***DO NOT*** *use abrasive cleaners*
- ***DO NOT*** *clean glass while it is hot*

- Prepare a work area large enough to accommodate fixed glass assembly and decorative barrier front by placing a drop cloth on a flat, stable surface.

Note: Fixed glass assembly and gasketing may have residue that can stain carpeting or floor surfaces.

- Remove decorative barrier front from fireplace and set aside on work surface.

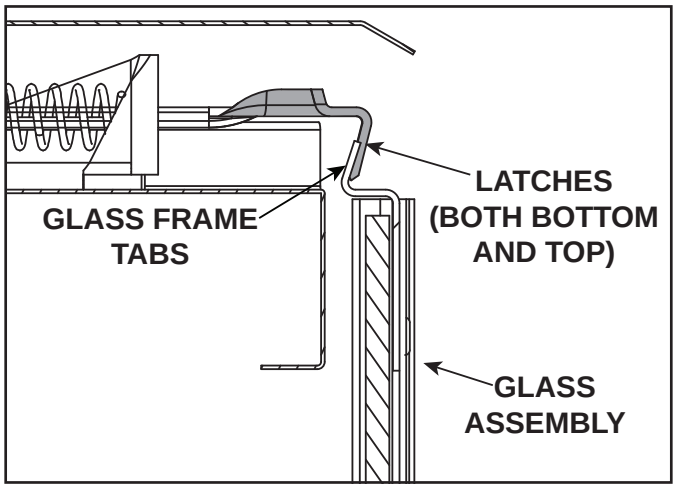

Figure 4.1 Fixed Glass Assembly

Removing Fixed Glass Assembly

- Pull the four glass assembly latches away from the tabs on the glass frame. Remove glass assembly from the appliance. See Figure 4.1.
- Clean glass with a non-abrasive, non-ammonia based, commercially available gas fireplace glass cleaner.
  - Light deposits: Use a soft cloth with soap and water
  - Heavy deposits: Use commercial fireplace glass cleaner (consult with your dealer)

Replacing Fixed Glass Assembly

- Replace the glass assembly on the appliance. Hold glass in place with one hand. Use the other hand to pull out and latch the four glass assembly latches onto the glass frame tabs.
- Inspect and operate all glass latches to ensure they move freely and no obstructions are present.
- Reinstall decorative barrier front.

Decorative Barrier Fronts

Frequency: Annually

By: Homeowner

Tools needed: Protective gloves, stable work surface

- Assess condition of screen and replace as necessary.
- Inspect for scratches, dents or other damage and repair as necessary.
- Check that air intake and discharge areas are not blocked.
- Vacuum and dust surfaces.

Optional Remote Control

Frequency: Seasonally

By: Homeowner

Tools needed: Replacement batteries and remote control instructions.

- Locate remote control transmitter and receiver.
- Verify operation of remote. Refer to remote control operation instructions for proper calibration and setup procedure.
- Replace batteries as needed in remote transmitters and battery-powered receivers.
- Place remote control out of reach of children.

If not using your fireplace for an extended period of time (summer months, vacations/trips, etc), to prevent unintended operation:

- Remove batteries from remote controls.
- Unplug 6 volt adapter plug.

Termination Cap

Frequency: Seasonally

By: Homeowner

Tools needed: Protective gloves and safety glasses.

- Inspect exposed venting and termination cap for blockage or obstruction such as plants, bird nests, leaves, snow, debris, etc.
- Verify termination cap clearance to subsequent construction (building additions, decks, fences, or sheds).
- Inspect for corrosion or separation.

C. Maintenance Tasks - Qualified Service Technician

The following tasks must be performed by a qualified service technician.

Gasket Seal and Glass Assembly Inspection

Frequency: Annually

By: Qualified Service Technician

Tools needed: Protective gloves, drop cloth and a stable work surface.

- Inspect gasket seal and its condition.
- Inspect fixed glass assembly for scratches and nicks that can lead to breakage when exposed to heat.
- Confirm there is no damage to glass or glass frame. Replace as necessary.
- Verify that fixed glass assembly is properly retained and attachment components are intact and not damaged. Replace as necessary.

Log Inspection

Frequency: Annually

By: Qualified Service Technician

Tools needed: Protective gloves.

- Inspect for damaged or missing logs. Replace as necessary. Refer to Installation manual for log placement instructions.
- Verify correct log placement and no flame impingement causing sooting. Correct as necessary.

Firebox Inspection

Frequency: Annually

By: Qualified Service Technician

Tools needed: Protective gloves, sandpaper, steel wool, cloths, mineral spirits, primer and touch-up paint.

- Inspect for paint condition, warped surfaces, corrosion or perforation. Sand and repaint as necessary.
- Replace fireplace if firebox has been perforated.

Control Compartment and Firebox Top

Frequency: Annually

By: Qualified Service Technician

Tools needed: Protective gloves, vacuum cleaner, dust cloths

- Vacuum and wipe out dust, cobwebs, debris or pet hair. Use caution when cleaning these areas. Screw tips that have penetrated the sheet metal are sharp and should be avoided.
- Remove all foreign objects.
- Verify unobstructed air circulation.

Interior Ceramic Glass Panel Cleaning

Frequency: Seasonally

By: Qualified Service Technician

Tools Needed: Protective gloves, glass cleaner.

CAUTION! Handle glass with care. *Glass is breakable.*

- *Avoid striking, scratching or slamming glass*
- *Avoid abrasive cleaners*
- ***DO NOT*** *clean glass while it is hot*

- Clean glass with a non-abrasive commercially available cleaner.
  - Light deposits: Use a soft cloth with soap and water
  - Heavy deposits: Use commercial fireplace glass cleaner (consult with your dealer).

Pilot and Burner Ignition and Operation

Frequency: Annually

By: Qualified Service Technician

Tools needed: Protective gloves, vacuum cleaner, whisk broom, flashlight, voltmeter, indexed drill bit set, and a manometer.

- Inspect orifice for soot, dirt and corrosion. Verify orifice size is correct. See Service Parts List for proper orifice sizing.
- Verify air shutter setting is correct. See Installation Manual for required air shutter setting. Verify air shutter is clear of dust and debris.
- Verify burner is properly secured and aligned with pilot or igniter.
- Clean off burner top, inspect for plugged ports, corrosion or deterioration. Replace burner if necessary.
- Inspect IPI flame sensing rod for soot, corrosion and deterioration. Polish with 320 grit Emery cloth and/or 3M™ Scotch-Brite Abrasive Hand Pad.
- Verify that there is not a short in flame sense circuit by checking continuity between pilot hood and flame sensing rod. Replace pilot as necessary.
- Verify manifold and inlet pressures. Adjust regulator as required.
- Check all accessible gas-carrying tubes, connections, pipes and other components for leaks.
- Inspect pilot flame pattern and strength. See Figure 4.2 for proper pilot flame pattern. Clean or replace orifice spud as necessary.
- Replace Glowing embers with new dime-size pieces. **DO NOT** block ports or obstruct lighting paths. Refer to appliance installation manual for proper ember placement.
- Check for smooth lighting and ignition carryover to all ports. Verify that there is no ignition delay. Inspect and ensure the lighting of the main burner occurs within four seconds of the main gas valve opening.
- Inspect for lifting or other flame problems.
- Verify batteries have been removed from battery back-up to prevent premature battery failure or leaking.

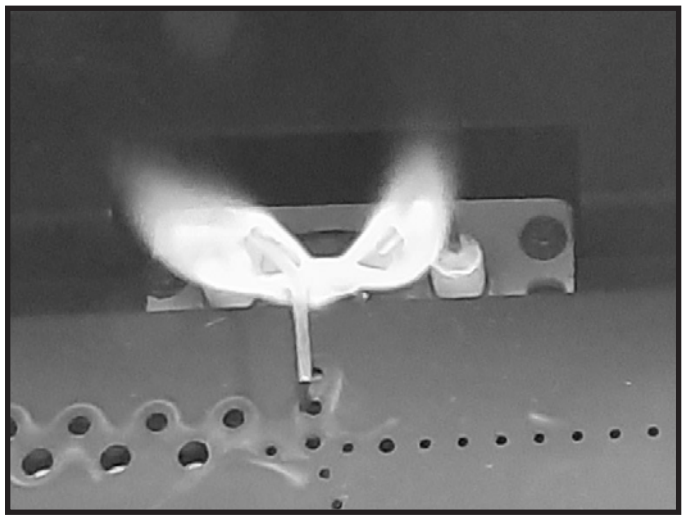

Figure 4.2 Pilot Flame

NOTE: Appearance of rock jig, pilot shield and media tray may vary between appliance models.

Valve Plate Assembly Removal

Frequency: As needed

By: Qualified Service Technician

Tools needed: Protective gloves, 1/4 inch nut driver,

It may become necessary for a qualified service technician to remove the valve plate assembly for valve service or replacement. This task should be performed by a qualified service technician. The refractory panels **do not** need to be removed to access the valve plate assembly. See Section 9 of Appliance Installation Manual for details.

WARNING! Risk of Fire or Explosion! *Turn off gas to appliance before removing components. Support gas line to prevent bending.*

CAUTION! Risk of Cuts or Abrasions. *Wear protective gloves and safety glasses during removal and installation. Sheet metal edges are sharp.*

Electrical Service and Repair

WARNING! Risk of Shock! *Label all wires prior to disconnection when servicing controls. Wiring errors could cause improper and dangerous operation. Verify proper operation after servicing.*

WARNING! Risk of Shock! *Replace damaged wire with type 105º C rated wire. Wire must have high temperature insulation.*

5 Frequently Asked Questions and Troubleshooting

A. Frequently Asked Questions - Appliance

ISSUE	SOLUTIONS
Condensation on the glass	This is a result of gas combustion and temperature variations. Prior to appliance being turned on, the inside of the glass has cooled below the dew point producing a byproduct of combustion: water in the form of condensation. As the fireplace glass warms, the condensation will disappear. In the summer, the inside of your fireplace contains hot humid air from outdoors. When the air from outdoors contacts glass cooled below the dew point by your air conditioning, moisture in that air will condense.
Blue flames	This is a result of normal operation and the flames will begin to yellow as the fireplace is allowed to burn for 20 to 40 minutes.
Erratic flames	Verify that the glass assembly is correctly installed and that all glass latches are engaged over the tabs on the glass frame. Vent baffle/flue restrictor may be needed when long vertical vent runs are used. Refer to Installation Manual Section 4 Vent Diagrams.
Odor from fireplace	When first operated, this fireplace may release an odor for the first several hours. This is caused by the curing of the paint and the burning off of any oils remaining from manufacturing. Odor may also be released from finishing materials and adhesives used around the fireplace. These circumstances may require additional curing related to the installation environment.
Film on the glass	This is a normal result of the curing process of the paint and logs. Glass should be cleaned within 3 to 4 hours of initial burning to remove deposits left by oils from the manufacturing process. A non-abrasive cleaner such as gas fireplace glass cleaner may be necessary. Contact your dealer.
Metallic noise	Noise is caused by metal expanding and contracting as it heats up and cools down, similar to the sound produced by a furnace or heating duct. This noise does not affect the operation or longevity of the fireplace.
Is it normal to see the pilot flame burn continually?	In an intermittent pilot ignition system (IPI), the pilot flame should turn off when appliance is turned off. Some optional control systems available with IPI models may allow pilot flame to remain lit.
Power Outages (battery backup)	This appliance can be operated on battery power in the event of a power outage. To access the battery pack, the decorative barrier front, mesh and glass assembly must be removed. Refer to Section 3 for more details.
Wall above appliance feels hot to the touch.	No action necessary. This appliance ships with a non-combustible material attached. Specifications of the attached non-combustible material are listed in the Installer's Manual for this appliance.

Contact your dealer for additional information regarding operation and troubleshooting. Visit www.majesticproducts.com to locate a dealer.

B. Frequently Asked Questions - IntelliFire Touch Controls (Optional IFT-RC400)

Symptom	Possible Cause	Corrective Action
The appliance does not respond to commands from the remote control display does not light up when screen is touched.	Batteries are depleted.	Verify batteries are new.
	Batteries are incorrectly oriented.	Verify batteries are installed in correct orientation as shown on batteries receptacle.
The display on remote lights up when screen is touched but it does not respond to commands.	Touchscreen has lost calibration.	Touchscreen needs to be re-calibrated. Call dealer to have screen re-calibrated.
	Child Lock is ON.	Check child lock icon located at the top of the remote display. If ON, it will show as a 'locked' symbol. To unlock, remove battery compartment door, locate child lock switch and move to 'unlock' position. Verify child lock icon on screen is now displayed in 'unlock' position.
The remote displays the following message on-screen: No dealer info available	Dealer information not programmed into remote.	Remote will still provide all available functions, and appliance is fully available for use. Call dealer to have them program.
The remote displays the following message on-screen: Call "Dealer Name & Number" to schedule maintenance.	300 hours of use. Appliance is still fully functional.	The appliance has been burning for 300 hours and is due for a regular maintenance. Call dealer to have them perform maintenance.
The room temperature displayed on the remote is either slow or quick to respond while operating in thermostat mode.	Remote is placed at a very short distance or too far away from the appliance.	Try to keep the remote close to the appliance but not directly in front of it. The remote acts as the thermostat.
	Remote is placed in the path of an air draft or vent.	Move the remote away from the direct path of air flow. The remote acts as the thermostat.
	Flame Modulation	The control system is designed to automatically adjust the flame intensity based on the difference between the desired room temperature, and actual temperature. In thermostat mode, the hearth appliance will start in HI flame, but as the actual temperature approaches the desired set temperature on the remote, the flame intensity will automatically decrease. Automatic flame modulation will result in more control of the temperature, and will cause the appliance to cycle OFF/ON less.
The appliance turns OFF the flame after extended periods of operation	9 hour safety shutdown timer	This is normal behavior. The appliance has a safety timer that will automatically turn OFF the flame after nine hours of uninterrupted operation.
The remote displays the following message on-screen: Fan will turn on within 3 minutes	Functioning as intended.	The appliance has a three minute delay timer before the fan is turned ON. This allows the air surrounding the appliance to be heated before being pushed into the room.
The remote displays the following message on-screen: "Replace remote batteries."	Low batteries in remote.	Install new batteries in the remote.
The remote is displaying an incorrect brand.	Remote was programmed incorrectly.	Call dealer to have them program the remote with correct branding. Remote is still fully functional and the appliance is unaffected.
After turning flame ON using remote, the flame does not turn ON immediately and instead a two minute timer is displayed.	Power vent is installed on the appliance.	This is expected behavior and the two minute timer is called a pre-purge timer. The flame will turn ON at the expiration of the timer.
The remote displays the following message on-screen: "Remote Control Communication Error."	No power to appliance.	Verify home circuit breaker is on and master reset is on (if equipped).
	Power outage.	Install new batteries in battery backup.
The remote displays the following message on -screen: Sorry your appliance did not start. Try again by pressing Flame On.	No power to appliance. No gas to appliance. Accumulation of air in gas line from extended period of appliance inactivity. Gas control system failure.	Verify that appliance has power and gas. Verify that the appliance accepts flame ON commands with an audible beep, and successfully turns flame on within 90 seconds. If this failure persists, contact dealer for service.

C. Troubleshooting

With proper installation, operation, and maintenance your gas appliance will provide years of trouble-free service. If you do experience a problem, this troubleshooting guide will assist a qualified service technician in the diagnosis of a problem and the corrective action to be taken. This troubleshooting guide can only be used by a qualified service technician. Contact your dealer to arrange a service call by a qualified service technician.

Note to Qualified Service Technician: Additional resources including troubleshooting guides and service videos are available through Hearth & Home Technologies. Contact your dealer or access resources through your myhht.com account.

IntelliFire Touch

Error Codes:

ECM LED Error Codes	Description
3 Red: 1 Green	IFT-RC400 error message: 'Appliance Safely Disabled', pilot sparks for 90 sec, no flame rectification.
2 Red: 1 Green	IFT-RC400 display: 'Error Pilot Flame', pilot valve solenoid not detected.
2 Red: 2 Green	Sparking feedback signal error, spark coil failure.
5 Red: 1 Green	IFT-RC400 display: 'Error Power Vent' (if installed).

See Troubleshooting matrix for more detail on Lock-out Error Codes, Possible Causes and Corrective Actions.

Troubleshooting:

Symptom	Possible Cause	Corrective Action
Pilot won't light, module clicks but no spark 90 sec, 3 Red/1 Green Lock out.	Incorrect wiring.	Verify 'S' (White) sense wire and 'I' (orange) ignitor wire are connected to correct terminals on IFT-ECM.
	Loose connections or electrical shorts in wiring.	Verify no loose connections or electrical shorts in wiring from module to pilot assembly. Verify wire insulation is not damaged. Verify wires are not grounding out to chassis, pilot burner, or any other metal object. Replace any damaged wires.
	Ignitor gap is too large.	Verify spark gap is approximately 0.095" (2.41 mm) to 0.135" (3.43 mm).
Pilot won't light, there is no noise or spark.	No AC power, AC/DC adaptor faulty, backup batteries (if being used) depleted, IFT-ECM slider switch in OFF position.	Verify IFT-ECM slider switch is in ON or REM position. Verify AC power available to junction box. Verify AC/DC adaptor is plugged into junction box and ECM. Verify AC/DC adaptor output voltage is between 5.7-6.3 Vdc. If battery pack is used, check battery pack voltage is >4.2 V (if not, replace batteries).
	Shorted or loose connection in system wiring or wiring harness.	Verify system wiring configuration. Remove and reinstall wiring harness that plugs into module. Check continuity of wires in valve wiring harness. Replace any damaged components.
	Poor or no system ground.	Verify black ground wire in valve harness is connected to metal chassis of fireplace.
Pilot won't light, there is no noise or spark, 2 Red/1 Green Lockout.	Pilot solenoid not detected.	Check if valve harness orange wire is connected to pilot solenoid valve. Check pilot solenoid resistance, nominal is 40 ohms. If open or shorted, replace valve. Check valve harness wire continuity, if open replace 6-pin harness.
Pilot won't light, there is no noise or spark, 2 Red/2 Green Lockout.	Spark coil failure.	Replace ECM.

IntelliFire Touch - (continued)

Symptom	Possible Cause	Corrective Action
Pilot sparks but does not light, after 90 sec, 3 Red/1 Green Lockout	No gas supply.	Verify incoming gas line ball valve is 'Open'. Verify inlet pressure is within requirement for gas type used. Contact gas supplier.
	ECM has poor ground.	Verify wiring, check valve harness black wire is securely grounded to metal chassis.
	Gas valve defective.	Check pilot valve solenoid kick and hold voltages during ignition cycle. Kick V should be >1 V, hold V minimum 0.26 V. If voltages are OK, replace gas valve.
Pilot lights but main burner does not light. Pilot continues to spark for 90 sec then goes into 3 Red/1 Green Lockout.	No flame detected. Flame rectification issue.	Check if white sense lead is securely connected to 'S' terminal of IFT-ECM. Check resistance of sense lead between sense rod tip and connector to IFT-ECM, should be less than 1 ohm - if not, replace pilot assembly. Check system ground, ensure black valve harness wire is securely attached to metal chassis. Check wiring for damage. With system OFF, check resistance between tip of sense rod and pilot hood, should be resistance (>1 M-ohm).
	No flame detected or sense rod contamination.	With glass assembly installed, verify pilot flame is engulfing flame sense rod on pilot assembly. Verify inlet gas pressure is correct for gas type. Polish flame sense rod with fine steel wool to remove any contaminants that may have accumulated.
Pilot lights and rectifies, but main burner does not light.	Main valve solenoid.	Check if green wire in valve harness is connected to green main valve solenoid. Check main valve solenoid resistance, nominal is 60 ohms. If open or shorted, replace valve. Verify valve inlet pressure is correct for gas type.
Pilot and main do not light, ECM goes into 5 Red/1 Green Lockout.	Power Vent (PV) Failure.	Power Vent blower defective - check wiring to IFT-ACM, check if blower is working. Check if PV pressure switch is connected to brown and black wire in 6-pin valve wire harness. Check if pressure switch is closed (shorted) when PV blower is running. Refer to PV troubleshooting instructions.
Appliance lights and runs for a few minutes then shuts down and/or appliance cycle ON and OFF with less than 90 sec of ON time.	Shorted or loose connection in flame detection circuit.	Check if white sense lead is securely connected to 'S' terminal of IFT-ECM. Check resistance of sense lead between sense rod tip and connector to IFT-ECM, should be less than 1 ohm - if not, replace pilot assembly. Check system ground, ensure black valve harness wire is securely attached to metal chassis. Check wiring for damage. With system OFF, check resistance between tip of sense rod and pilot hood, should be resistance (>1 M-ohm).
	Poor flame rectification or contaminated sense rod.	With glass assembly installed, verify pilot flame is engulfing flame sense rod on pilot assembly. Verify inlet gas pressure is correct for gas type. Polish flame sense rod with fine steel wool to remove any contaminants that may have accumulated. Verify no soot deposits are in sense rod to pilot hood gap.
	Logs are set up wrong.	Remove and re-install logs per the log placement instructions.
	Damaged pilot assembly.	Verify the pilot assembly ceramic insulator around the flame sensing rod is not cracked, damaged or loose. Check resistance between tip of sense rod and IFT-ECM connector, should be less than 1 ohm. Replace pilot assembly if damage is detected.

6 Reference Materials

A. Accessories

WARNING! Risk of Fire and Electric Shock! *Use ONLY Hearth & Home Technologies-approved optional accessories with this appliance. Using non-listed accessories could result in a safety hazard and will void the warranty.*

Contact your dealer for more information and details, such as color options and specific quantities required, on individual accessories. A qualified service technician must install the approved accessories. Operate installed accessories according to the included instructions.

Note: Some optional accessories must be installed at the time of appliance installation. See Section 2.A in appliance Installation Manual.

Options:

Remote Controls, Wall Controls and Wall Switches	
IFT-RC150-MAJ	IntelliFire Touch wireless wall switch
IFT-RC400	IntelliFire Touch remote control
IntelliFire Wi-Fi module with IntelliFire App	
IFT-WFM	IntelliFire Wi-Fi module for app
Heat Management Systems Kits	
HEAT-OUT-GAS	Heat-Out-Gas
HEAT-ZONE-GAS	Heat-Zone-Gas
HZMR-ADP	Heat Zone Adapter
PH-MR	Passive Heat-Front, Side or Top Discharge
PH-SIDETRIM	Passive Heat registers for side discharge (requires PH-MR)
PH-FRTTRIM-36, PH-FRTTRIM-42	Passive Heat registers for front discharge (requires PH-MR)
Glass Media (Required to Complete)	
MEDIA-CP (5 lb bag)	Crushed glass media - Copper
MEDIA-CY (5 lb bag)	Crushed glass media - Crystal
MEDIA-GT (5 lb bag)	Crushed glass media - Graphite
MEDIA-SM (5 lb bag)	Crushed glass media - Smoked Embers
Stone Media	
STONES-NATURAL	
Log Sets	
LOGS-KMOD	
Fan	
GFK-160A	

Meridian 36” Gas Fireplace - DV

Beginning Manufacturing Date: Jun 2023
Ending Manufacturing Date: Active

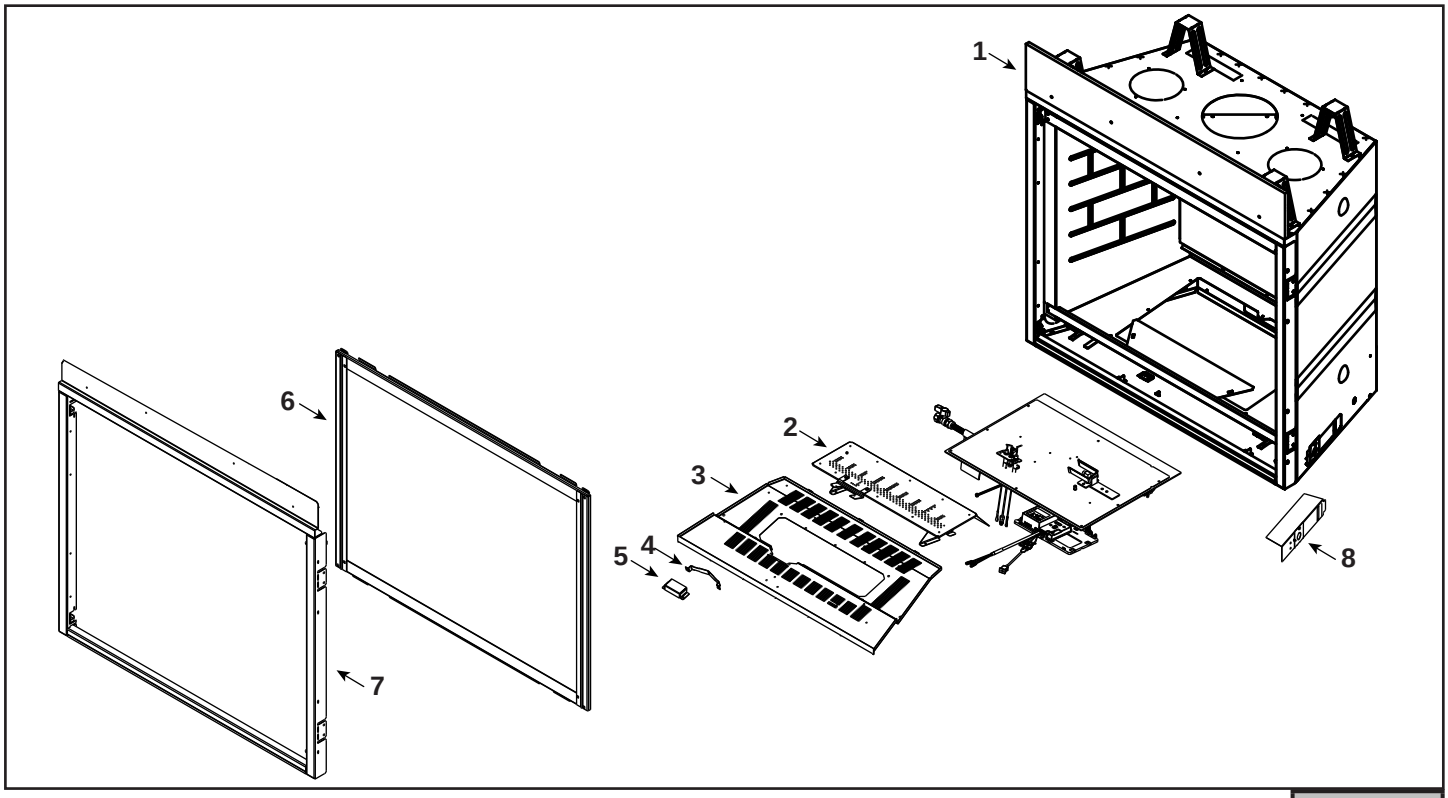

IMPORTANT: THIS IS DATED INFORMATION. Parts must be ordered from a dealer or distributor. **Hearth and Home Technologies does not sell directly to consumers**. Provide model number and serial number when requesting service parts from your dealer or distributor.

ITEM	DESCRIPTION	COMMENTS	PART NUMBER	Stocked at Depot
1	Non-combustible board		2583-137	
2	Burner Assembly		2584-007	**Y**
3	Base Pan Assembly		2584-017	
4	Media Bracket		2584-141	
5	Pilot Shield		2584-139	
6	Glass Assembly		GLA-6KL	**Y**
	Finishing Strips	Sold as set only	SRVFS-6K	
7	Surround		SRV2583-019	
	Surround Bottom		SRV2583-193-1	
8	Junction box		SRV2583-009	**Y**
	Flue Restrictor		385-128	
	Gasket Assembly (Vent, seal cap, cover, drawn neck, shutter, valve, & bulkhead)		2583-080	
	Glass Clip Assembly (Top)	Qty 2 req	2155-047	**Y**
	Glass Clip Assembly (Bottom)	Qty 2 req	2155-045	**Y**
	Seal Cap		SRV4031-221	
	Rock Jig, Modern		2584-600	
	Magic Glass Assembly (Back, Left, & Right)		2599-079	

Additional service parts on following page.

Service Parts

MER42MN

Meridian 42” Gas Fireplace - DV

Beginning Manufacturing Date: Jun 2023
Ending Manufacturing Date: Active

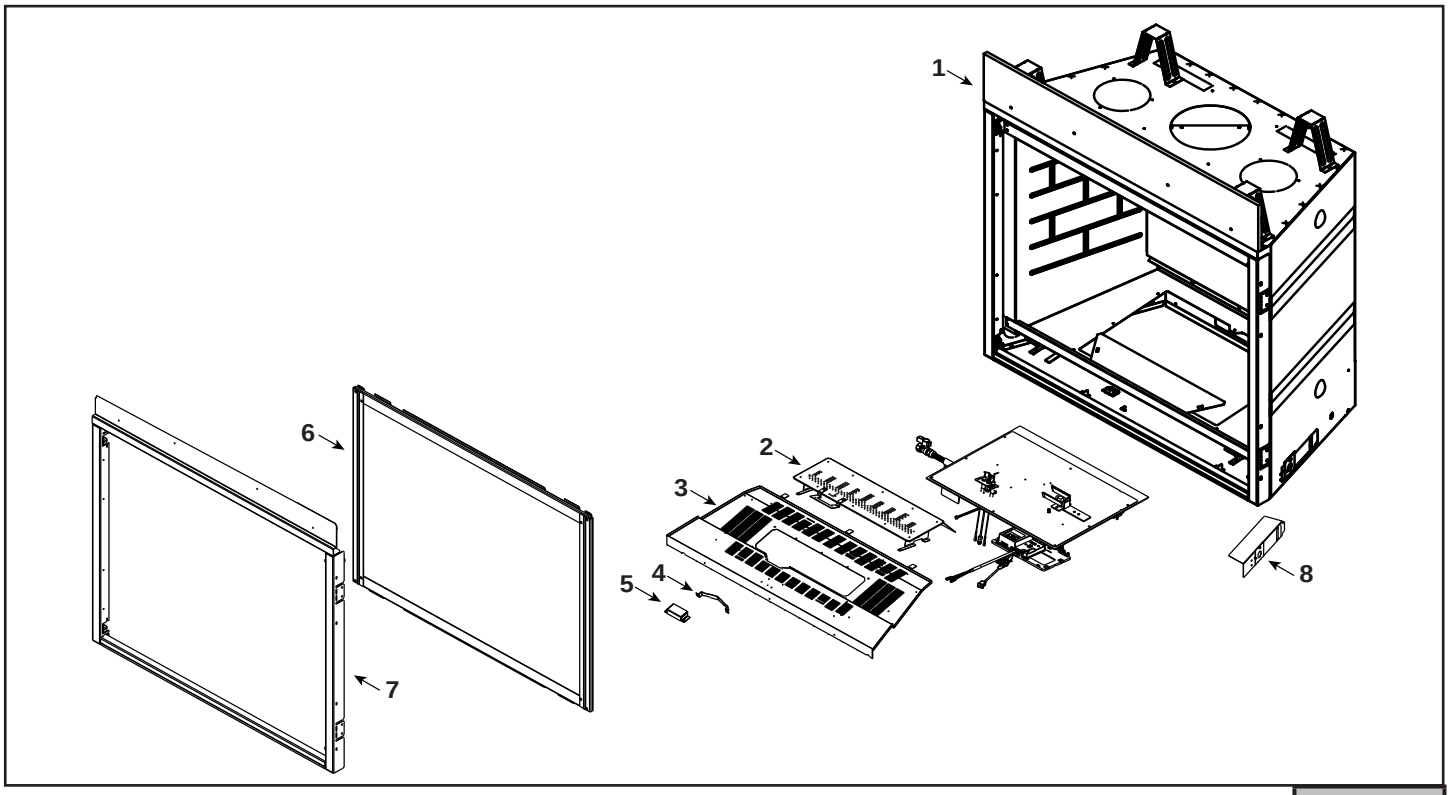

IMPORTANT: THIS IS DATED INFORMATION. Parts must be ordered from a dealer or distributor. **Hearth and Home Technologies does not sell directly to consumers**. Provide model number and serial number when requesting service parts from your dealer or distributor.

ITEM	DESCRIPTION	COMMENTS	PART NUMBER	Stocked at Depot
1	Non-combustible board		2587-137	
2	Burner Assembly		2588-007	**Y**
3	Base Pan Assembly		2588-017	
4	Media Bracket		2584-141	
5	Pilot Shield		2584-139	
6	Glass Assembly		GLA-8KL	**Y**
	Finishing Strips	Sold as set only	SRVFS-8K	
7	Surround		SRV2587-019	
	Surround Bottom		SRV2583-193-2	
8	Junction box		SRV2583-009	**Y**
	Flue Restrictor		385-128	
	Gasket Assembly (Vent, seal cap, cover, drawn neck, shutter, valve, & bulkhead)		2583-080	
	Glass Clip Assembly (Top)	Qty 2 req	2155-047	**Y**
	Glass Clip Assembly (Bottom)	Qty 2 req	2155-045	**Y**
	Seal Cap		SRV4031-221	
	Rock Jig, Modern		2584-600	
	Magic Glass Assembly (Back, Left, & Right)		2590-079	

Additional service part numbers on following page.

Beginning Manufacturing Date: Jun 2023
Ending Manufacturing Date: Active

IMPORTANT: THIS IS DATED INFORMATION. Parts must be ordered from a dealer or distributor. **Hearth and Home Technologies does not sell directly to consumers**. Provide model number and serial number when requesting service parts from your dealer or distributor.

#9 Valve Assembly

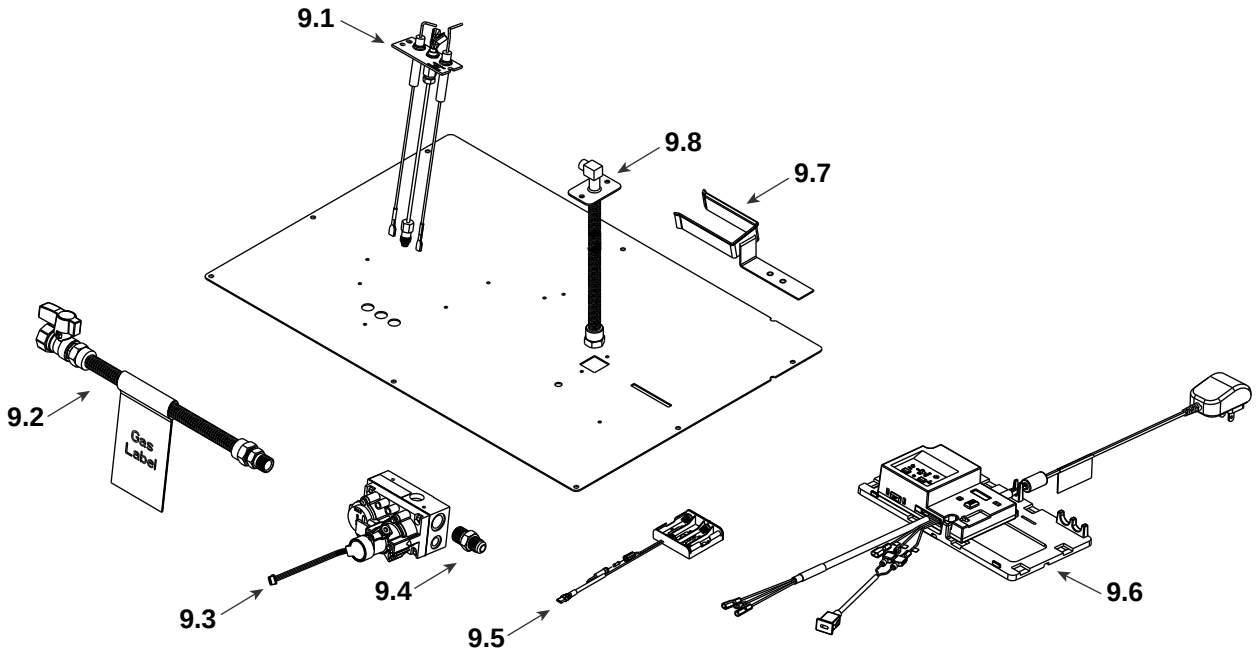

ITEM	DESCRIPTION	COMMENTS	PART NUMBER	Stocked at Depot
9.1	Pilot Assembly	NG	SRV2106-169	**Y**
9.2	Flex Ball Valve Assembly		SRV303-330	**Y**
9.3	Valve	NG	SRV2166-302	**Y**
9.4	Male Connector	Pkg of 5	303-315/5	**Y**
9.5	Battery Holder**		SRV2326-142	**Y**
9.6	Component Tray Assembly		**See following page**	
9.7	Shutter Assembly		2583-011	
9.8	Bulkhead W/Flex tube		SRV7000-156	**Y**
	Orifice, NG (#35C)	**MER36MN**	SRV582-835	**Y**
	Orifice, NG (#32C)	**MER42MN**	SRV582-832	**Y**

**Fuse for battery pack can be sourced locally, not a warranty item. Specs are 250v, 3A fuse, 3/4” long

Additional service part numbers on following page.

Beginning Manufacturing Date: Jun 2023
Ending Manufacturing Date: Active

IMPORTANT: THIS IS DATED INFORMATION. Parts must be ordered from a dealer or distributor. **Hearth and Home Technologies does not sell directly to consumers**. Provide model number and serial number when requesting service parts from your dealer or distributor.

#9.6 Component Tray

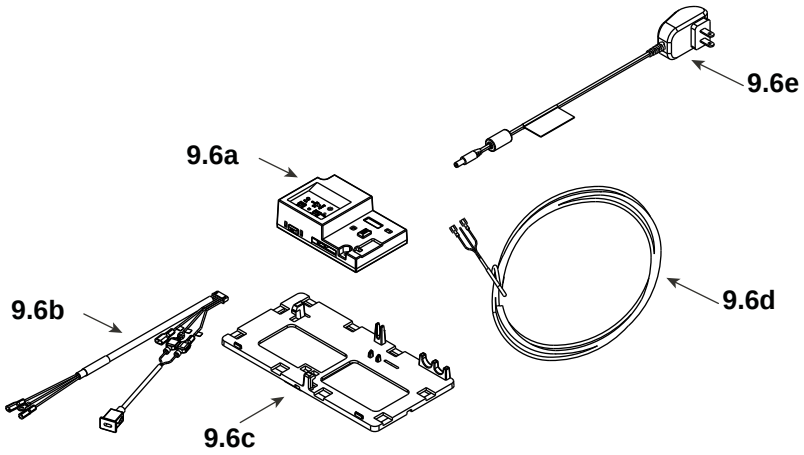

ITEM	DESCRIPTION	COMMENTS	PART NUMBER	Stocked at Depot
9.6a	Module, IFT Control		SRV2326-130	**Y**
9.6b	Harness, IFT 6 Pin Wiring		SRV2583-063	**Y**
9.6c	Component Tray		2279-185	
9.6d	Thermostat Wire Assembly		SRV2118-170	**Y**
9.6e	Transformer, 6 Volt Wall		SRV2326-131	**Y**
	Driftwood Logs (Optional)		LOGS-KMOD	
	Stone Kit (Optional)	Qty 3 req	STONES-NATURAL	
	Media Kit, Crystal, 5lbs. (Optional required to complete)	**MER36MN** qty 2 req **MER42MN** qty 3 req	MEDIA-CY	
	Media Kit, Copper, 5lbs. (Optional required to complete)	**MER36MN** qty 2 req **MER42MN** qty 3 req	MEDIA-CP	
	Media Kit, Graphite 5lbs. (Optional required to complete)	**MER36MN** qty 2 req **MER42MN** qty 3 req	MEDIA-GT	
	Media Kit, Smoked 5lbs. (Optional required to complete)	**MER36MN** qty 2 req **MER42MN** qty 3 req	MEDIA-SM	
	RC400 Remote (Optional)		SRV2326-110	**Y**
	Touch Up Paint		TUP-GBK-12	

C. Contact Information

Majestic, a brand of Hearth & Home Technologies
7571 215th Street West, Lakeville, MN 55044
www.majesticproducts.com

Please contact your Majestic dealer with any questions or concerns.
For the location of your nearest Majestic dealer,
please visit www.majesticproducts.com.

- NOTES -

_____

_____

_____

_____

_____

_____

_____

_____

_____

NOTICE

DO NOT DISCARD THIS MANUAL

- Important operating and maintenance instructions included.
- Read, understand and follow these instructions for safe installation and operation.
- Leave this manual with party responsible for use and operation.

This product may be covered by one or more of the following patents: (United States) 7077122, 7074035, 7234932, 7322819, 7422011, 7726300, 8147240, 9625149 or other U.S. and foreign patents pending.

2000-945F

Printed in U.S.A. - Copyright 2026