HEAT-OUT-GAS

- Installation Instructions -

HEARTH & HOME technologies

For use with select IntelliFire™ Touch Models only. Csonsult appliance Owner's Manual for specific model compatibility.

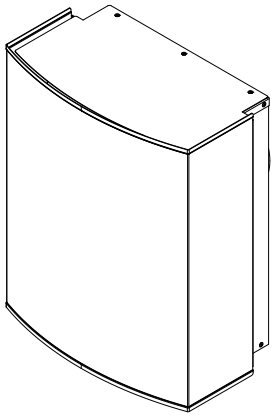

GAS-FIRED

c UL us

LISTED

NOTICE

DO NOT DISCARD THIS MANUAL

- Important operating and maintenance instructions included.
- Read, understand and follow these instructions for safe installation and operation.
- Leave this manual with party responsible for use and operation.

DO NOT DISCARD

1 Introduction

Table of Contents

1 Introduction

A. Introduction 1
B. Approvals 1
C. Kit Contents of HEAT-OUT-GAS 2
D. Installation Guidelines 3

2 Framing

A. Framing 6
B. Installing Vent Cap 8
C. Connecting Insulated Flex Duct 13

3 Electrical Information

A. Wiring the Appliance for the HEAT-OUT-GAS 14

Installation of the HEAT-OUT-GAS may be done by a qualified service technician only. Installation MUST comply with local, regional, state and national codes and regulations.

IMPORTANT: Failure to read and follow these instructions may create a possible hazard and will void the fireplace warranty.

These instructions must remain with the equipment.

CAUTION! Risk of Cuts or Abrasions. *Wear protective gloves and safety glasses during installation. Sheet metal edges are sharp.*

CAUTION! *Failure to install, operate, and maintain the power venting system in accordance with manufacturer's instructions will result in conditions which may produce bodily injury and/or property damage.*

NOTICE: *The fan motors present in the HEAT-OUT-GAS Heat Management System will generate sound during operation. The effects of the increased sound level can be minimized with careful planning during installation of the system.*

CAUTION! Risk of Shock! *Disconnect electrical power from fireplace/power vent before performing any maintenance, repair, or electrical wiring.*

A. Introduction

The HEAT-OUT-GAS Heat Management system is designed to remove unwanted heat from your home. The HEAT-OUT-GAS operates on 120VAC, 60Hz electrical services.

B. Approvals

The HEAT-OUT-GAS kit uses flexible duct marked as meeting requirements of UL-181, Class I ducting.

C. Kit Contents of HEAT-OUT-GAS

CAUTION! Do not install damaged components.

If any parts are missing or damaged, contact your dealer before starting installation. ***DO NOT*** *install a damaged kit.*

DESCRIPTION	SERVICE PART NO.	QTY
6 in. Round Duct	SRV659-200	1
Fan Base Assembly	SRV4086-021	1
Cover Assembly	SRV4086-022	1
Unit Collar	SRV659-125	1
Damper Assembly	SRV4086-316	1
Vinyl Siding Shield	SRV4086-140	1
*Fan Assembly	HEAT-OUT-UPG	1
*Junction Box Assembly	SRV2326-304	1
Variable Wall Rheostat	BC10	1

*Included in Fan Base Assembly

SRV659-200 6 Inch Round Duct

SRV4086-316 Damper Assembly

SRV4086-022 Cover Assembly

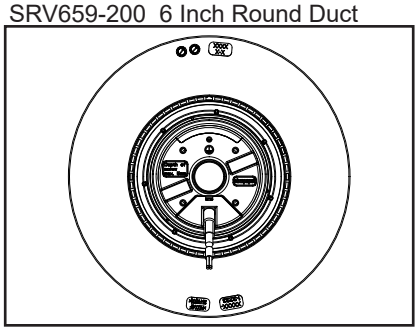

Fan Assembly - Order HEAT-OUT-UPG

SRV4086-021 Fan Base Assembly

BC10 Variable Wall Rheostat

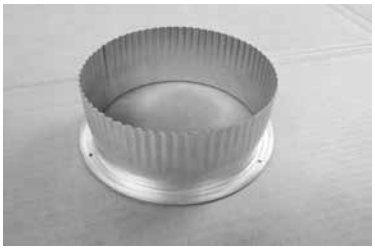

SRV659-125 Unit Collar

SRV2326-304 Junction Box Assembly

SRV4086-140 Vinyl Siding Shield

NOTICE: *Install vinyl siding heat shield only with vinyl siding.*

Figure 1.1 Kit Contents - HEAT-OUT-GAS

D. Installation Guidelines

The HEAT-OUT-GAS accessory is tested and safe when installed in accordance with this installation manual. It is your responsibility to read all instructions before starting installation and to follow these instructions carefully during installation.

Installation of this kit **MUST** be performed by a qualified service technician. After a qualified service technician has installed the appliance and the HEAT-OUT-GAS Heat Management System, follow the instructions supplied with the appliance manual for operation. Contact your dealer if you have questions.

The HEAT-OUT-GAS kit is carefully engineered and must be installed only as specified. If you modify it or any of its components you will void the warranty, and you may possibly cause a fire hazard. Installation must be done according to applicable local, state, provincial, and/or national codes.

WARNING! Risk of Fire or Explosion! *Damaged parts could impair safe operation.* ***DO NOT*** *install damaged, incomplete or substitute components.*

See Figure 1.2, Figure 1.3, and Figure 1.4 for information.

1. Installation Guidelines

a. The exit termination of mechanical draft systems shall not be less than seven feet above grade when located adjacent to public walkways.
b. The bottom of the exterior cap must be a minimum of 12 in. (305 mm) above finished grade.
c. The discharge outlet of the HEAT-OUT-GAS must be directed down to prevent water infiltration.
d. The damper can be installed in a horizontal or vertical position and in any location in the system, however, the open/close actuation is more positive when mounted vertically.
e. If the damper would need to be accessed at some point in the future, it's location should be taken into consideration at the time of installation.

2. Other Duct Options

Metal Round And Oval Duct: A combination of 6" round and 6" oval air duct can be used in the duct run. Metal duct components may be purchased from an HVAC supplier. A minimum of one inch clearance around uninsulated pipe must be maintained to all combustible surfaces.

Note: Support duct at intervals of no greater than 4 feet, with no more than 1/2" sag between supports as required by local code. Tape all seams with aluminum tape (1-1/4" minimum width, or as specified by local codes).

HEAT-OUT-GAS Configuration

NOTICE: *Damper MUST be installed properly or it will not function properly.*

- *Vertical Mounting: Install crimped side up.*
- *Horizontal Mounting: Rotate so the damper closes shut when the HEAT-OUT-GAS kit is not running.*

IMPORTANT: *See appliance installation manual for Heat Management prep and location of approved knockout use specific to each model unit.*

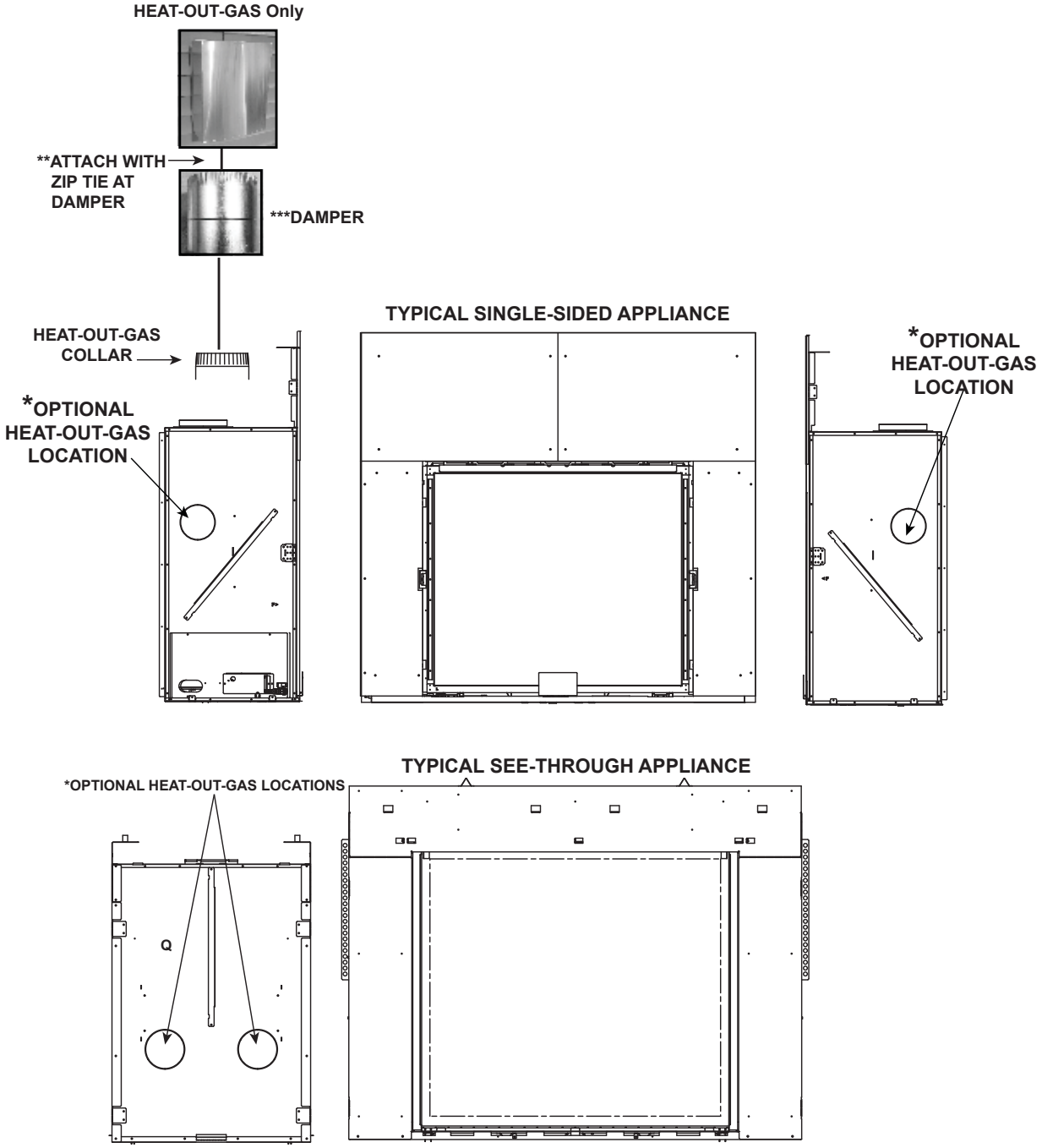

***The HEAT-OUT-GAS may be installed in either position shown above.**

***Note: Remove only one of the two HEAT-OUT seal plates if installing the HEAT-OUT-GAS. The other plate must remain installed.**
**** Use included zip ties to attach the flex duct to the damper.**
*****Verify damper is operational and no obstructions, such as screws, are present.**

APPLIANCE APPEARANCE WILL VARY

Figure 1.2 HEAT-OUT-GAS Configuration

Possible Air Duct Runs/Locations

Maximum Duct Run Length: 35 FT.
Minimum Duct Run Length: 36 IN.
Clearance to flexible duct = 0
Maximum Number of 90 Degree Elbows (Turns) = 6

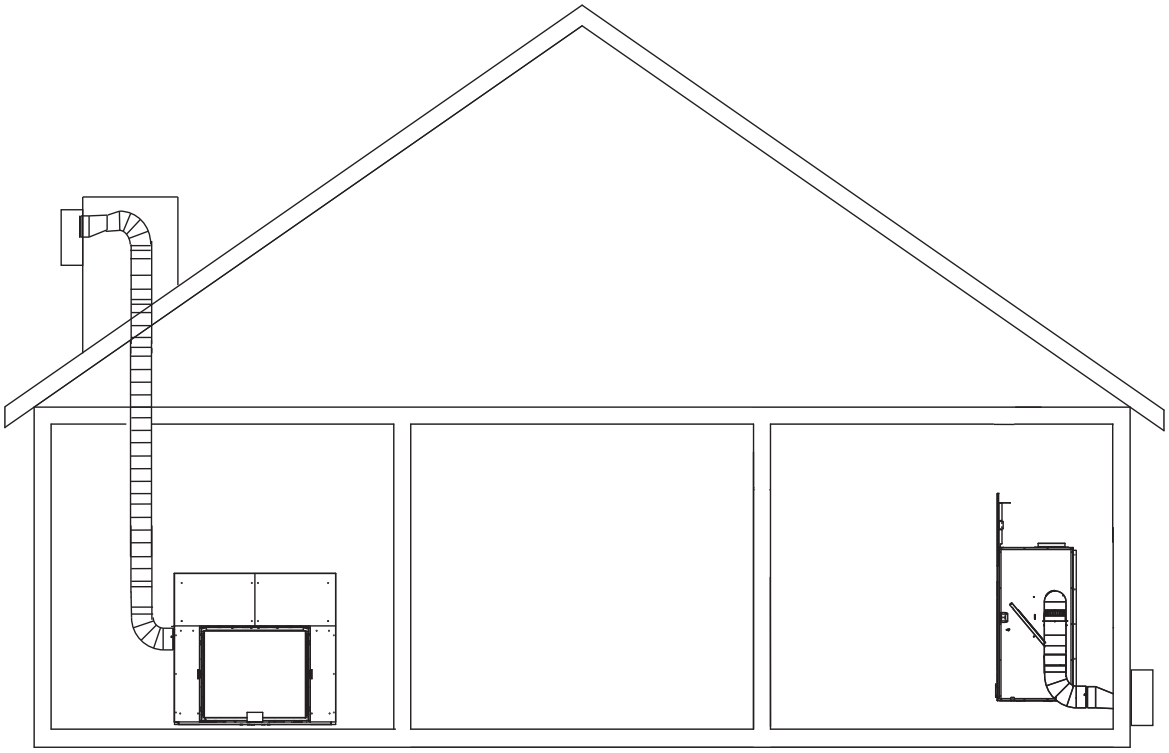

Figure 1.3 HEAT-OUT-GAS Locations

Power Vent Termination Clearances

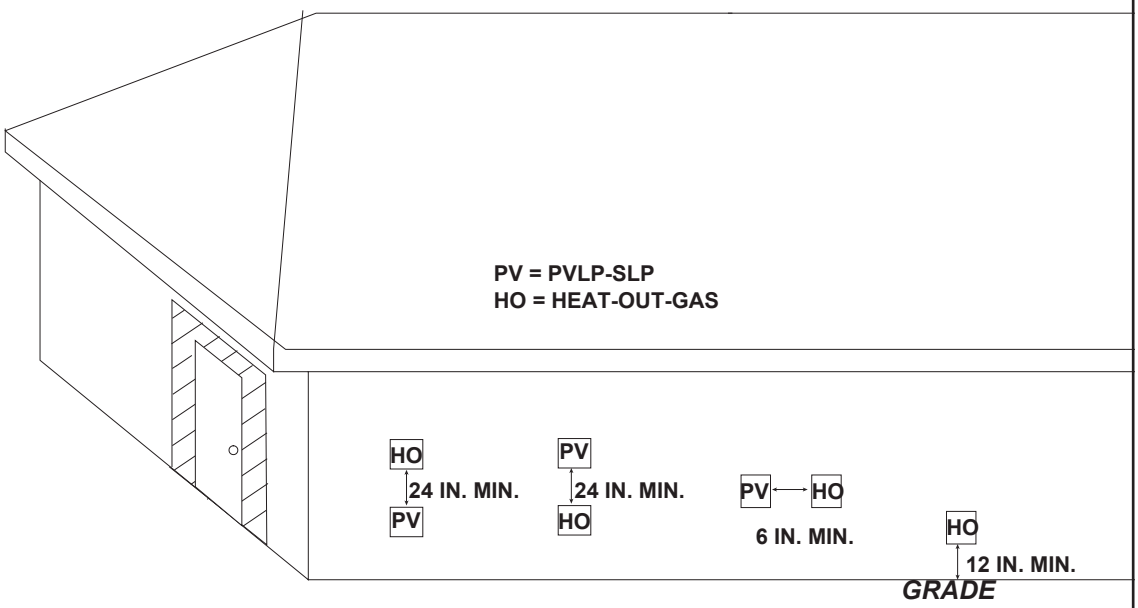

Figure 1.4 Minimum Clearances for Termination

2 Framing

A. Framing

Chassis Dimensions

The dimensions are measured as shown in Figure 2.1.

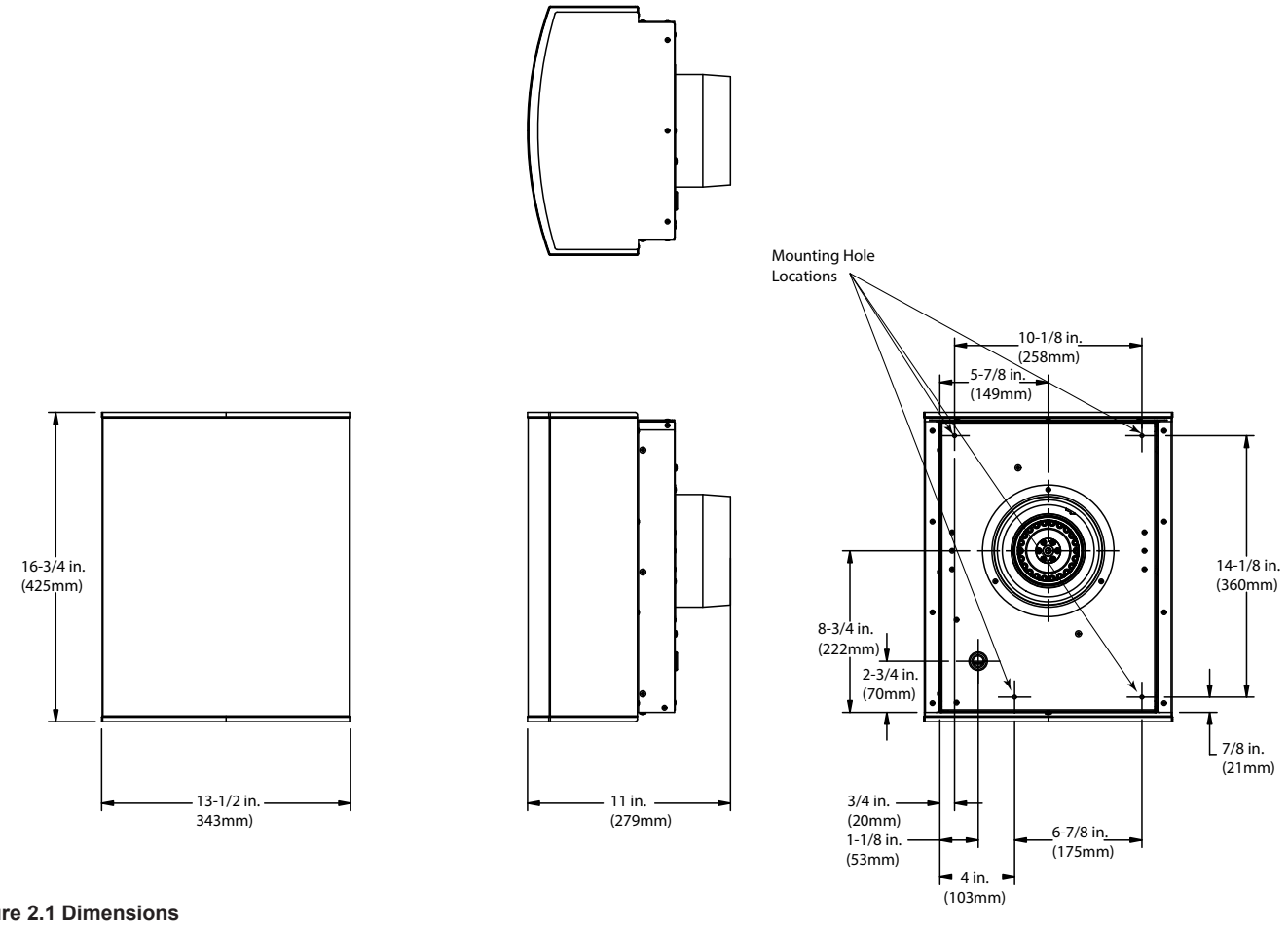

Figure 2.1 Dimensions

Framing Dimensions

1. Construct a framework as shown in Figure 2.2. Framework material should be the same dimensions as the material used for the wall framing. The dimensions of the box must be 12-5/8 inches high by 8-5/8 inches wide.

NOTE: Framing dimensions are for mounting purposes only and are not required for clearances.

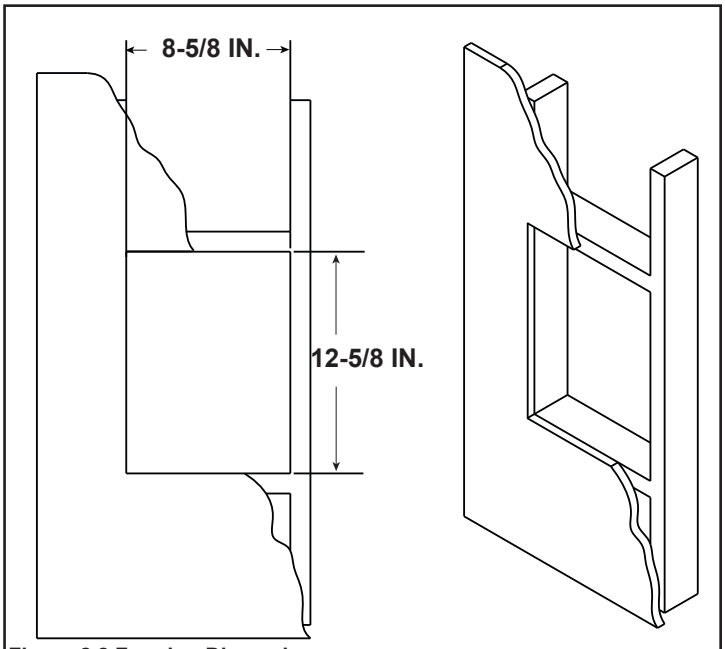

Figure 2.2 Framing Dimensions

Roof Top Termination

1. If the HEAT-OUT-GAS is going to terminate on a flat roof, an enclosure similar to the one shown in Figure 2.3 will need to be constructed.

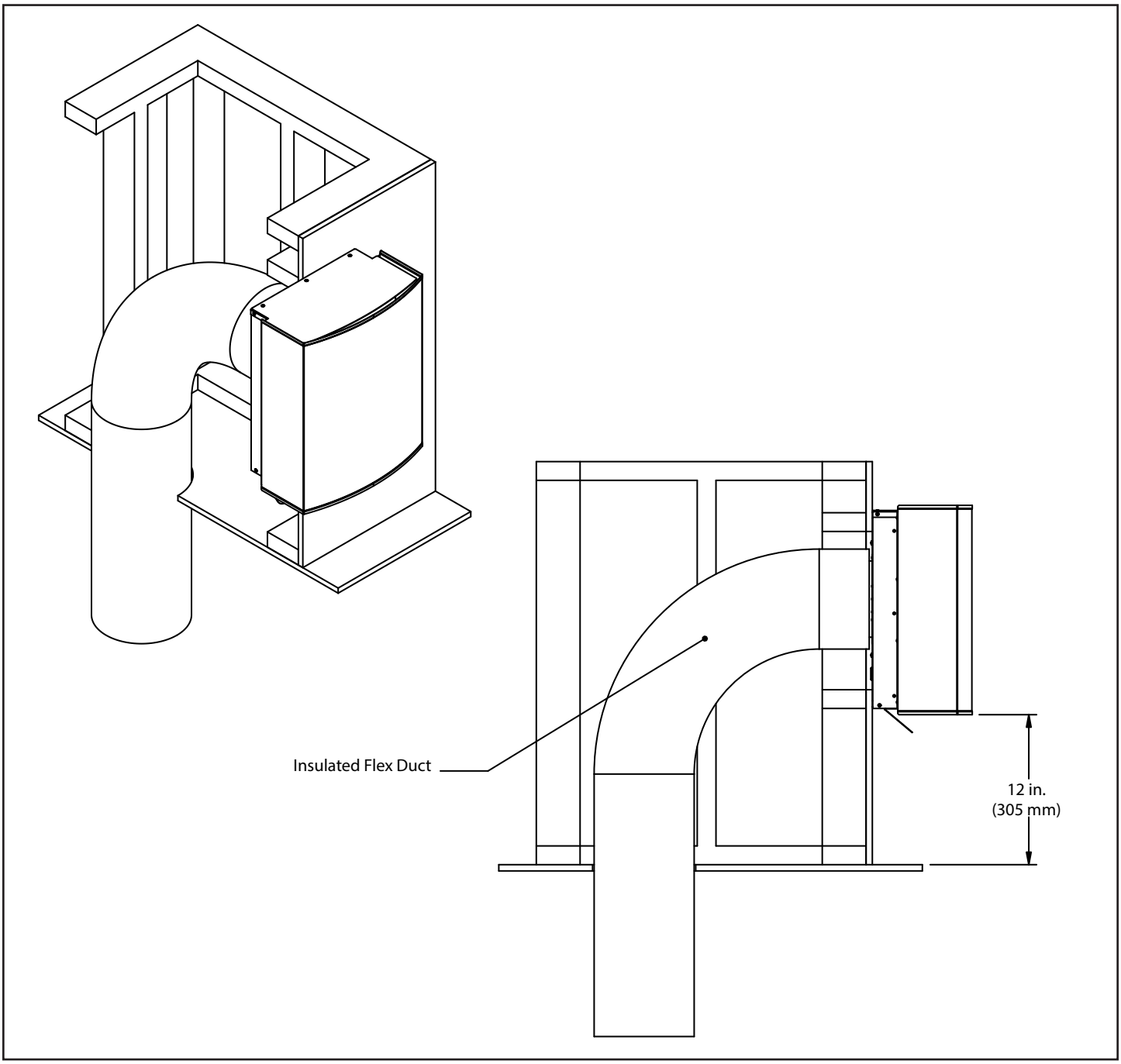

Figure 2.3 Flat Roof Enclosure

B. Installing Vent Cap

1. Remove the four screws holding the shipping bracket to the base of the HEAT-OUT-GAS. See Figure 2.4 and 2.5.
2. Remove the shipping bracket. See Figure 2.6.
3. The HEAT-OUT-GAS base should look like the picture in Figure 2.7.
4. Cut a 7" diameter hole in the outside of building where the duct for the HEAT-OUT-GAS is to be located. Refer to Figure 2.1 and Figure 2.3 for duct location on HEAT-OUT-GAS.

NOTE:

- The HEAT-OUT-GAS may be painted to a desired color, as long as the paint selected has sufficient temperature and environmental ratings.
- Thoroughly sand the existing coating prior to painting with sand paper or steel wool.
- The front of the cap cover may be field-painted and cured up to 400 degrees Fahrenheit (204° C).
- Certain areas of the cap surface may reach up to 250 degrees Fahrenheit (121° C). Paints selected should have sufficient temperature ratings.

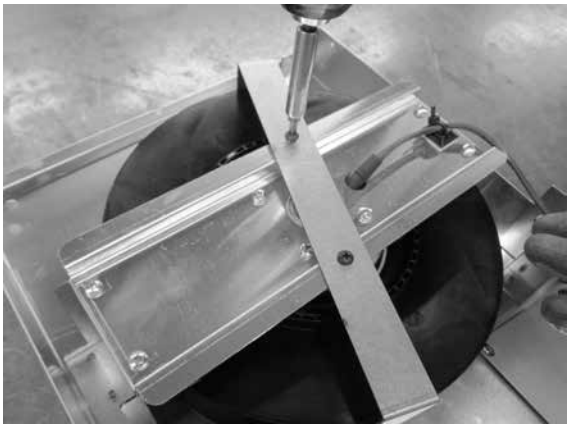

Figure 2.4

Figure 2.5

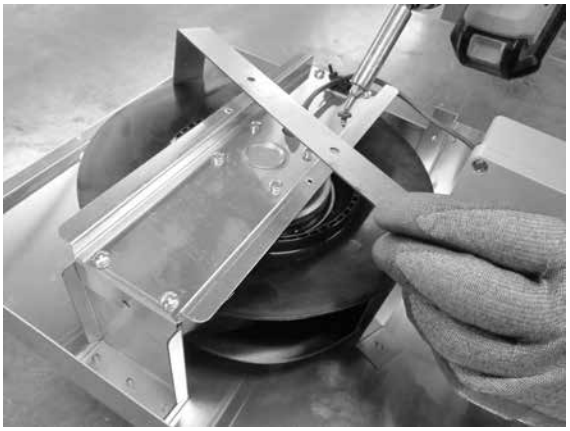

Figure 2.6

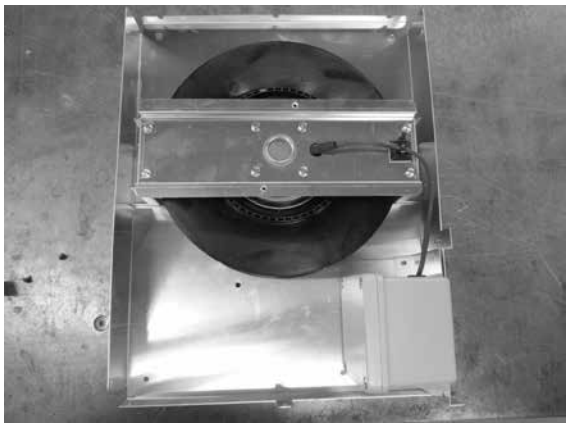

Figure 2.7

If installing with finishing material less than 1 inch thick go to step 15.

Note: A HEAT-OUT-BEK kit will be needed for installations with exterior finishing materials greater than 1 in. thick. Order with the appliance and venting system. It will be used to ensure that the finishing is done to the appropriate size for the HEAT-OUT-GAS to be installed properly.

5. Assemble the HEAT-OUT-BEK kit. Bend the two sections of the HEAT-OUT-BEK kit as shown in Figure 2.8.
6. Use the formed tabs, shown in Figure 2.8, to assemble the box as shown in Figure 2.9. The return bend on section A should be located on the outside of section B.
7. Place assembled box over the framed opening in the wall with outside flanges oriented vertically and held tight to the building exterior. See Figure 2.10.
8. Drive two of the supplied #8 X 3 inch screws through opposite ends of the two outer flanges. This will secure the HEAT-OUT-BEK extension box to the building and allow for squaring of the HEAT-OUT-BEK. See Figure 2.10.
9. Seal all corners, joints and bend lines with silicone (with a minimum of 300° F continuous exposure rating) caulk. Ensure all gaps and holes are filled so a sealed envelope is formed.
10. If finishing material extends past the cap extension box (BEK) more than one inch, an additional BEK is required. Cap extension boxes may be stacked for thicker wall applications:
    - Attach first box to the wall.
    - Assemble second box.
    - Bend the two outside flanges of the second box around to the inside of the box. See Figure 2.11.
    - Secure the second box to the first using four #8 x 1/2 sheet metal screws included in the HEAT-OUT-BEK kit. See Figure 2.11.

NOTICE: *It is imperative that the HEAT-OUT-BEK kit be installed squarely or the HEAT-OUT-GAS may not fit into opening left once finishing has occurred. Also care should be taken to ensure that HEAT-OUT-BEK is secured flat to wall.*

11. The wall is now ready to be finished. Finishing materials such as stone, marble or brick can then be applied up to the flanges of the *HEAT-OUT-BEK* that protrude perpendicular to the wall. This will ensure that the cap will fit into the opening after finishing has been completed.

NOTICE *Outside flanges of the HEAT-OUT-BEK must not have any pressure on them from the finishing materials. This could cause the opening left after finishing to be too small.*

12. After HEAT-OUT-BEK has been installed and the finishing of the wall has taken place, apply a bead of silicone (with a minimum of 300° F continuous exposure rating) to the HEAT-OUT-BEK around the entire metal flange, as shown in Figure 2.10 with the dotted line.

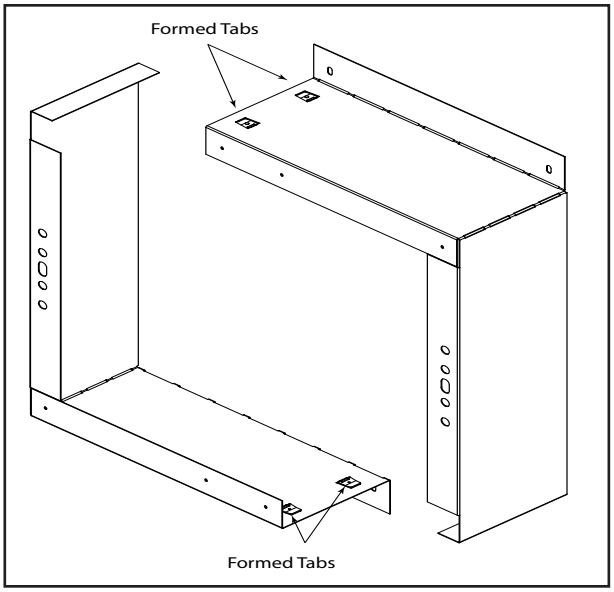

Figure 2.8 Bend BEK Sections

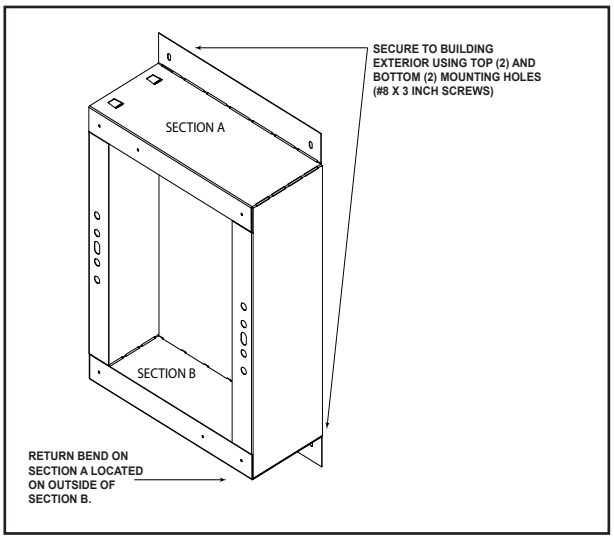

Figure 2.9 BEK Assembled

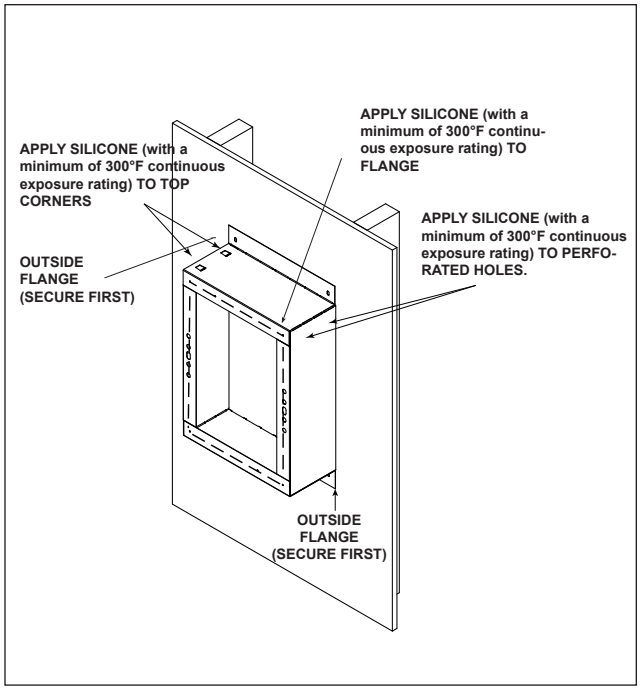

Figure 2.10 HEAT-OUT-BEK Attached to Wall

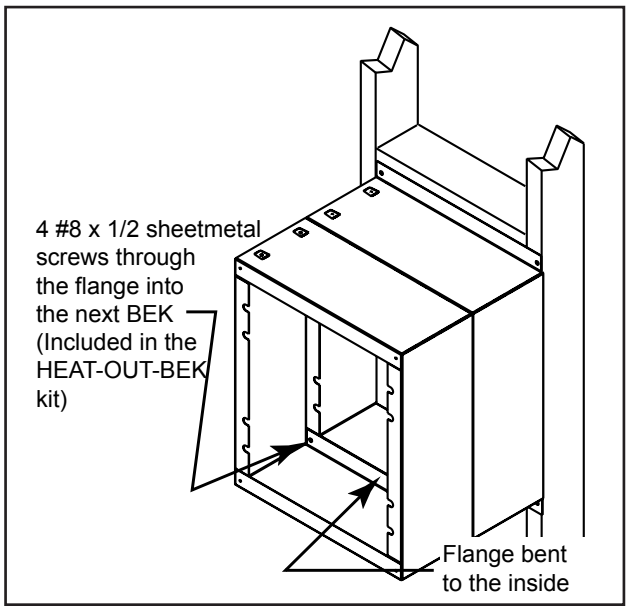

Figure 2.11 Stacking Boxes

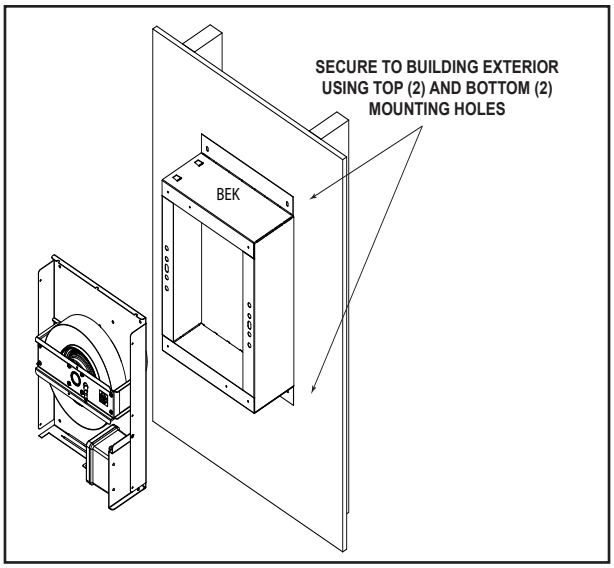

Figure 2.12 HEAT-OUT-GAS Attached to HEAT-OUT-BEK

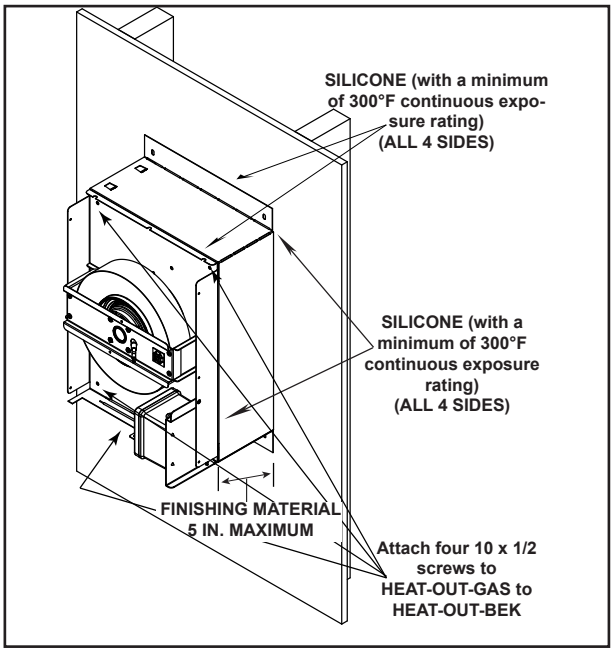

Figure 2.13 Silicone Weather Sealing

13. Apply a bead of silicone (with a minimum of 300° F continuous exposure rating) around the entire metal flange of the HEAT-OUT-GAS. See Figure 2.14. Align with HEAT-OUT-BEK as shown in Figure 2.12. Ensure cap is level and square, then secure HEAT-OUT-GAS to HEAT-OUT-BEK as shown in Figure 2.13.
14. After the HEAT-OUT-GAS has been secured to the HEAT-OUT-BEK, silicone (with a minimum of 300° F continuous exposure rating) should be applied around outer edge of HEAT-OUT-BEK where it meets the building exterior. Silicone (with a minimum of 300° F continuous exposure rating) should also be applied where HEAT-OUT-GAS and HEAT-OUT-BEK meet, as shown in Figure 2.13. If installing with HEAT-OUT-BEK skip to step 17.
15. Place a bead of silicone (with a minimum of 300° F continuous exposure rating) on the back side of the mounting flange for the heat-out. See Figure 2.14.
16. Install the heat-out into the wall and attach the cap to the wall using the four self-piercing #10 x 1/2 inch screws provided. See Figure 2.15.

Figure 2.14

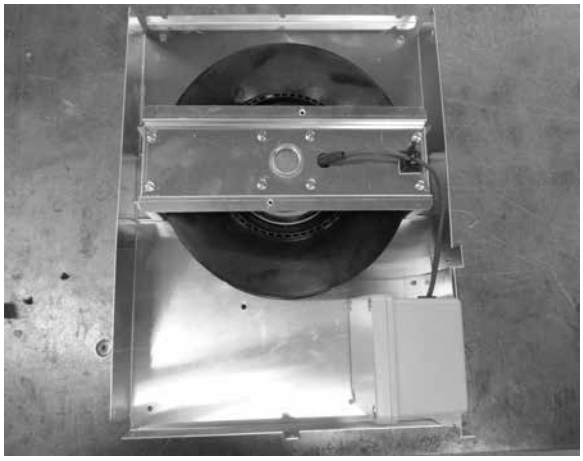

Figure 2.15

CAUTION! Risk of shock! *Disconnect electrical power from fireplace/Heat-Out before performing any maintenance, repair, or electrical wiring.*

17. Once the cap is fastened to the wall, remove the junction box cover to wire the Heat-Out. See Figure 2.16.

18. Attach the appropriate incoming wires to the hot, neutral and ground leads from the terminal block. Make sure to connect the chassis ground wire and the ground wire from the terminal block to the incoming ground wire. If using the wire plug provided in the kit, it may be necesary to cut the spade connectors off if making the connection using wire nuts (wire nuts not provided). See Figure 2.17 and 2.18.

19. **APPLIANCES NOT EQUIPPED WITH CONVECTION FAN**

    If installing on an appliance that is not equipped with a convection fan, and the fan outlet on the ACM is available, the Heat-Out fan may be wired to a plug and connected to the ACM fan outlet. See Figure 3.2.

Note: With this installation method the Heat-Out fan is controlled by the IFT-RC400 remote.

APPLIANCES EQUIPPED WITH CONVECTION FAN

For installations where the ACM fan outlet is already used, the fan must be wired to and controlled by using the provided variable wall Rheostat. Follow the wiring diagram shown in Figure 3.3.

Figure 2.16

Figure 2.17

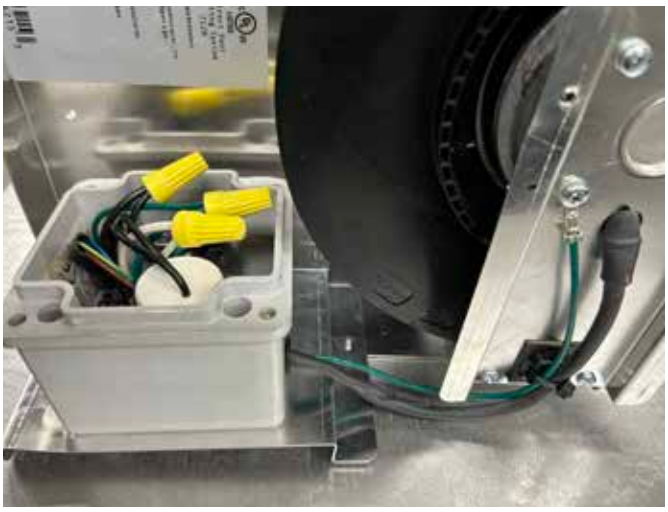

Figure 2.18

20. Reinstall the junction box cover. See Figure 2.16.

21. Install the decorative front cover onto the Heat-Out base using the seven #8 x 1/2 Phillips head screws provided in the kit. See Figure 2.19 and 2.20.

Figure 2.19

Figure 2.20

22. Once the decorative front cover is installed, apply a bead of silicone (with a minimum of 300°F continuous exposure rating) between the decorative cover and the finishing material around the cap. See Figure 2.21.

Figure 2.21

23. If the HEAT-OUT-GAS is being installed on a building with vinyl siding, the vinyl siding shield needs to be installed using three #8 x 1/2 Phillips screws. Remove the bottom screw installed in Step 21 and reattach it with the vinyl siding shield in place and two new screws provided in the kit. See Figure 2.22.

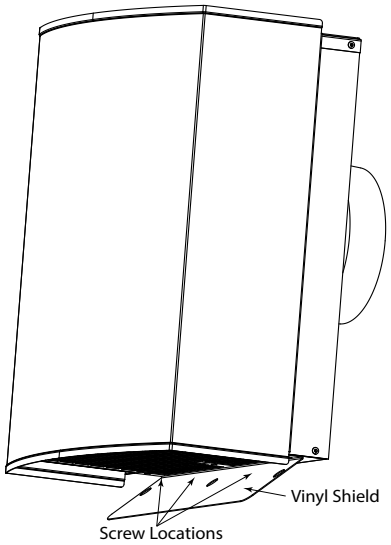

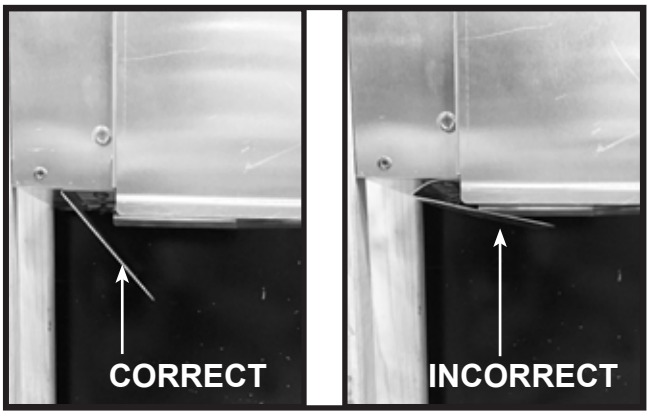

NOTICE: *Install vinyl siding heat shield only with vinyl siding.*

Figure 2.22

C. Connecting Insulated Flex Duct

Connections

1. After desired length is determined, cut completely around or through duct with knife or scissors. Cut wire with wire cutters. Fold back jacket and insulation.

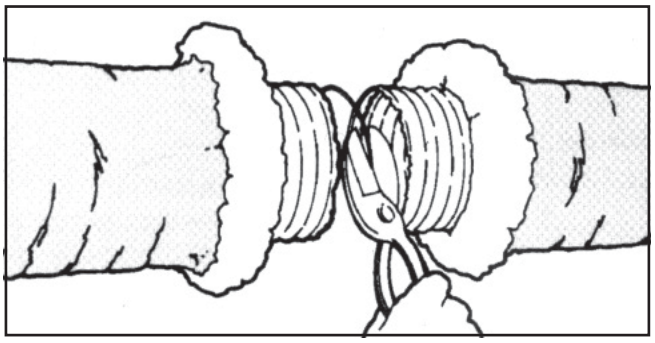

2. Slide at least 1" [25 mm] of core over fitting and past the bead. Seal core to collar with at least 2 wraps of duct tape. Secure connection with clamp placed over the core and tape and past the bead.

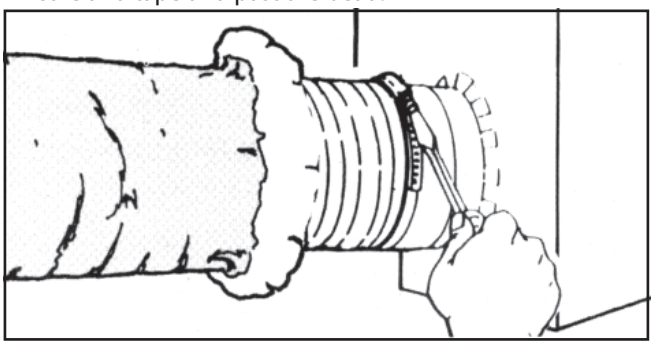

3. Pull jacket and insulation back over core. Tape jacket with at least 2 wraps of duct tape. A clamp may be used in place of or in combination with the duct tape.

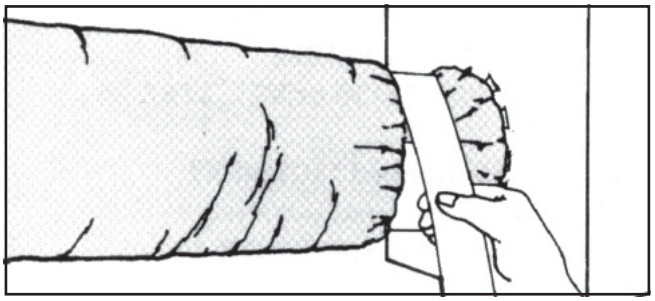

Splices

1. Fold back jacket and insulation from core. Butt 2 cores together on a standard 4" [100 mm] length metal sleeve.

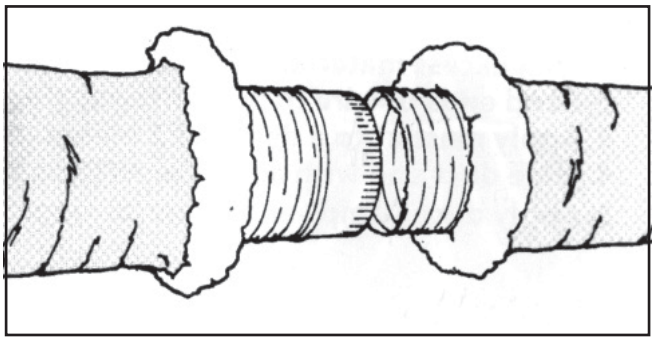

2. Tape cores together with at least 2 wraps of duct tape. Secure connection with 2 clamps placed over the taped core ends and past the beads.

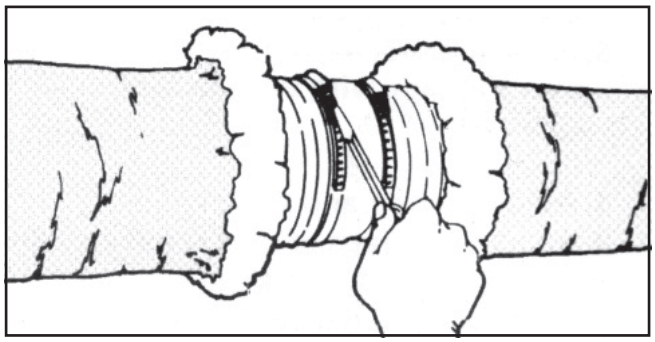

3. Pull jacket and insulation back over cores. Tape jackets together with at least 2 wraps of duct tape.

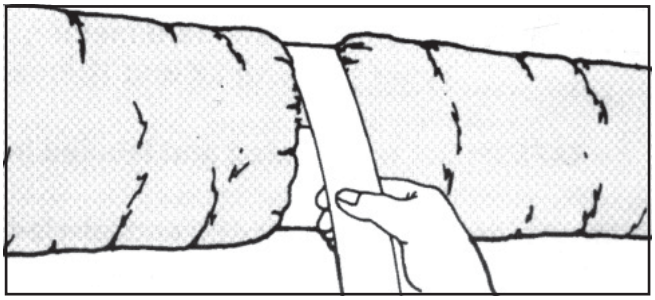

Figure 2.23

3 Electrical Information

A. Wiring the Appliance for the HEAT-OUT-GAS

NOTICE: *Electrical wiring must be done in accordance with national, provincial, and/or local electric codes.*

CAUTION! Risk of shock! *Disconnect electrical power from fireplace/Heat-Out before performing any maintenance, repair, or electrical wiring.*

Note: The process of pairing the IntelliFire™ Touch remote control with the appliance will need to be performed at this time in order for the HEAT-OUT-GAS to be recognized by the appliance. Refer to the IntelliFire™ Touch remote control instructions included with the appliance. The HEAT-OUT-GAS kit will be controlled by the "FAN" icon on the IntelliFire™ Touch remote, as seen here:

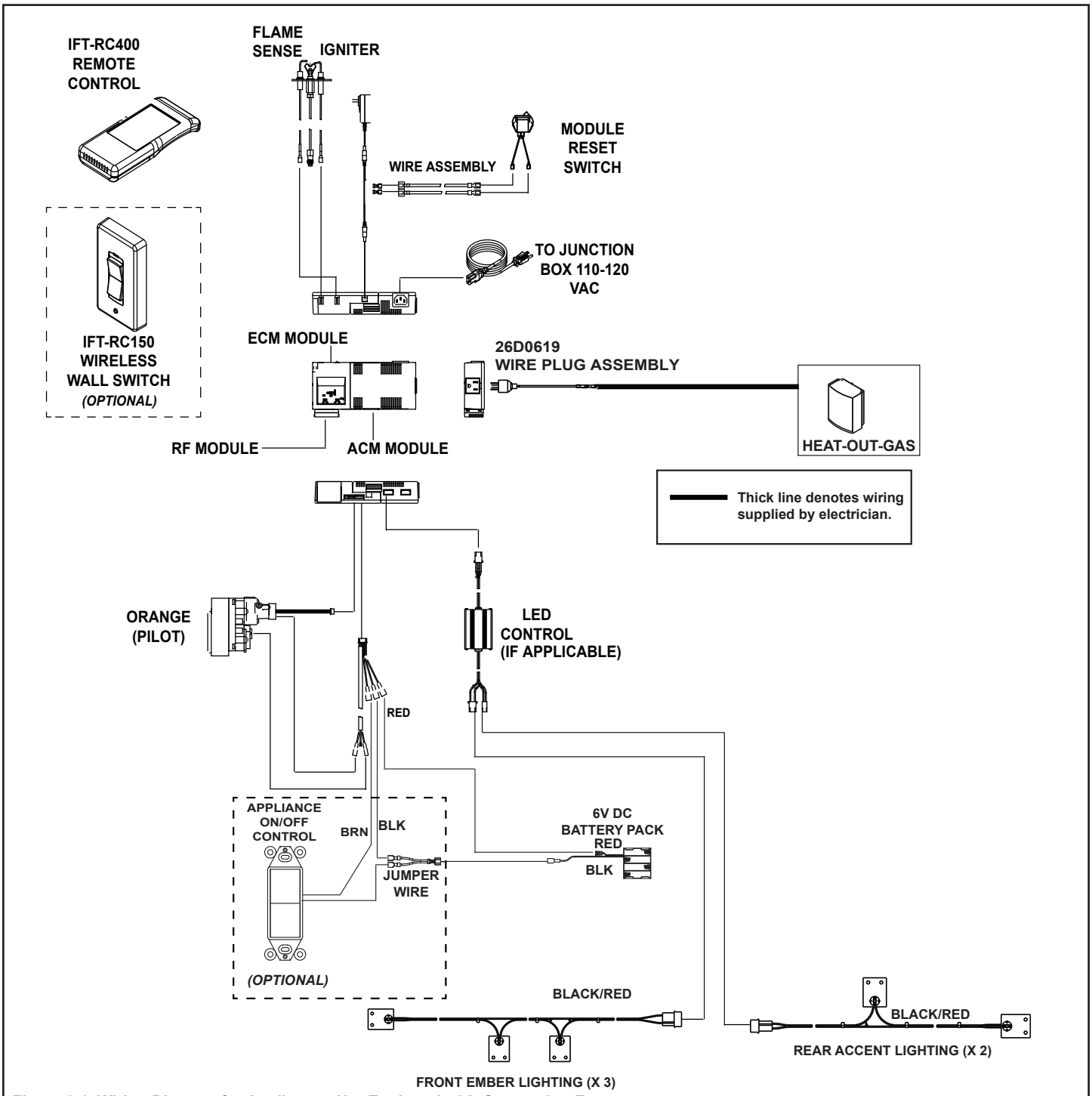

Figure 3.1 Wiring Diagram for Appliances Not Equipped with Convection Fan

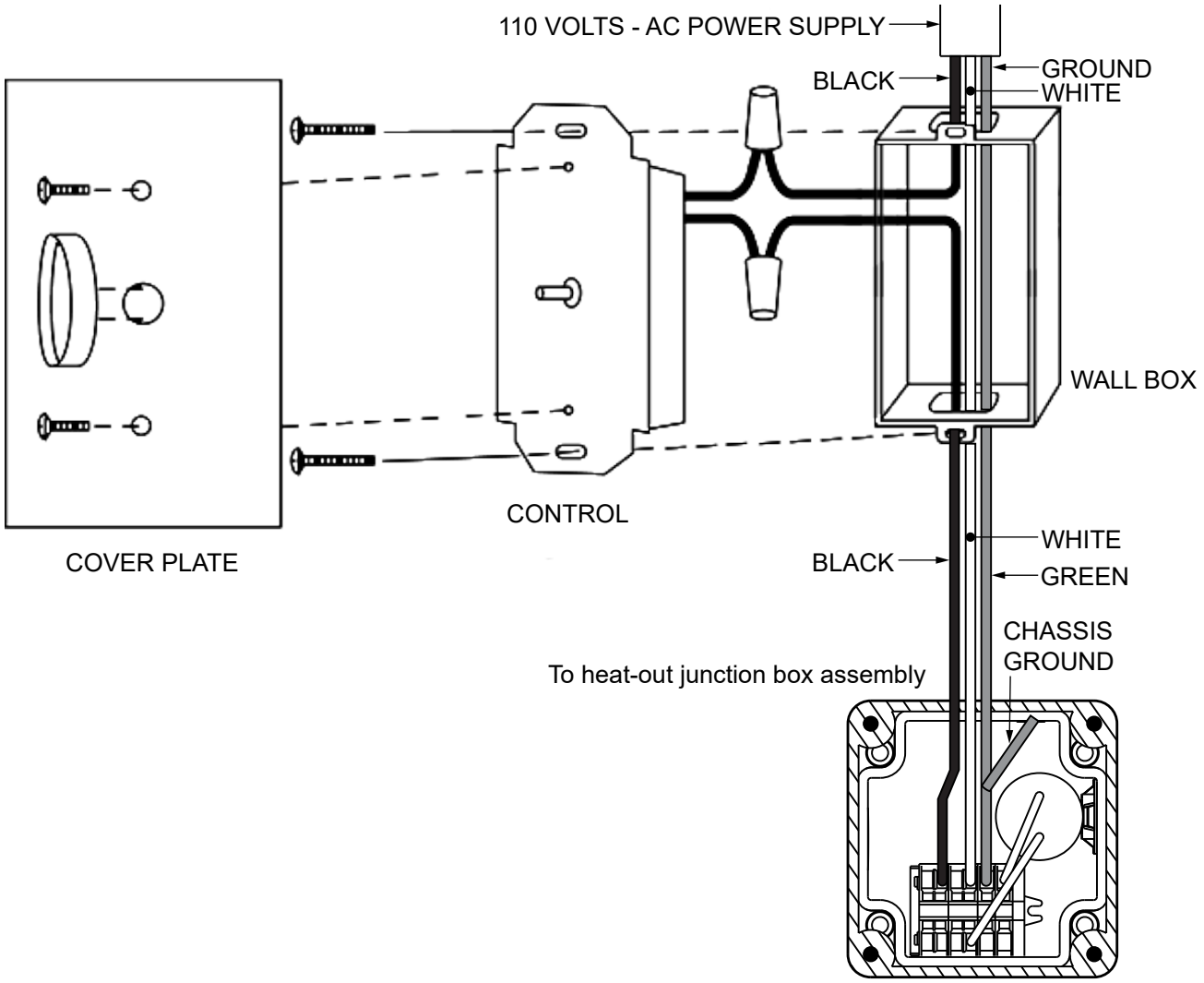

Figure 3.2 Wiring Diagram for Appliances Equipped with Convection Fan

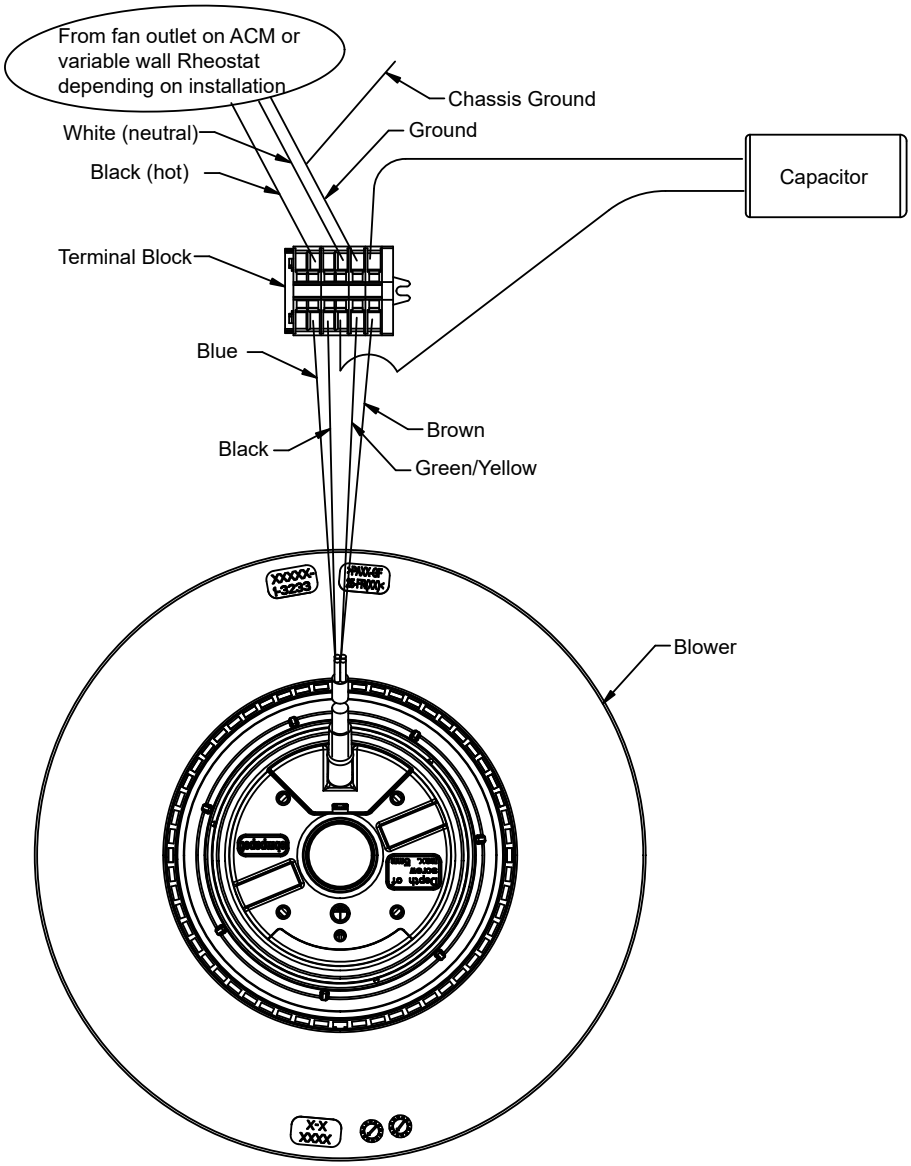

Figure 3.3 Wiring Diagram (HEAT-OUT-GAS)

Please contact your Hearth & Home Technologies dealer
with any questions or concerns.
For the location of your nearest Hearth & Home
Technologies dealer,
please visit www.hearthnhome.com.

Hearth & Home Technologies
7571 215th Street West, Lakeville, MN 55044
www.hearthnhome.com