MAKE THE MOST OF YOUR

LN15ICE

OUTDOOR CLEAR ICE MACHINE

CARE & USE/INSTALLATION

CONTENTS

Contents:

Warranty registration 2
Safety information 3
Unpacking your appliance 3
Installing your appliance 4
Door Reversal 7
Installing the drain plumbing 8
Gravity drain 8
Drain pump 9
Installing the water supply 10
Drain System Test 11
Ice maker operation 12
Product dimensions 14
Using your Electronic control 16
Cleaning your ice machine 17
Care and cleaning 19
Energy saving tips 19
Obtaining service 19
Troubleshooting the ice machine 20
Preparing the ice machine for storage 22
Drain pump removal 25
Warranty 27

Warranty Registration:

It is important you send in your warranty registration card immediately after taking delivery of your appliance or you can register online at:
www.lynxgrills.com/support/registration

The following information will be required when registering your appliance.
Model Number
Serial Number
Date of Purchase
Dealer's name and address

The service/model number and serial number can be found on the serial plate which is located inside the cabinet on the left side near the top. (See Figure 1).

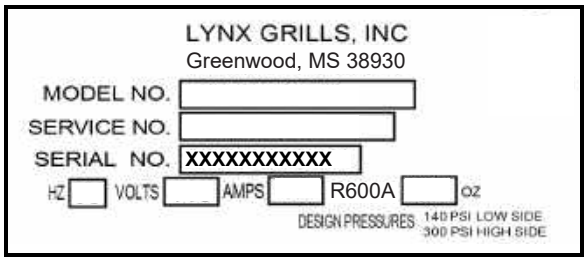

Figure 1

SAFETY INFORMATION AND UNPACKING YOUR APPLIANCE

Important Safety Instructions
Warnings and safety instructions appearing in this guide are not meant to cover all possible conditions and situations that may occur. Common sense, caution, and care must be exercised when installing, maintaining, or operating this appliance.

Recognize Safety Symbols, Words, and Labels.

WARNING

WARNING - You can be killed or seriously injured if you do not follow these instructions.

CAUTION

CAUTION-Hazards or unsafe practices which could result in personal injury or property / product damage.

NOTE

NOTE-Important information to help assure a problem free installation and operation.

WARNING

State of California Proposition 65 Warning:
This product contains one or more chemicals known to the State of California to cause birth defects or other reproductive harm.

WARNING

State of California Proposition 65 Warning:
This product contains one or more chemicals known to the State of California to cause cancer.

WARNING

WARNING - This unit contains R600a (Isobutane) which is a flammable hydrocarbon. It is safe for regular use. Do not use sharp objects to expedite defrosting. Do not damage refrigerant circuit.

WARNING

EXCESSIVE WEIGHT HAZARD
Use two or more people to move product.
Failure to do so can result in personal injury.

Remove Interior Packaging
Your appliance has been packed for shipment with all parts that could be damaged by movement securely fastened. Remove internal packing materials and any tape holding internal components in place. The owners manual is shipped inside the product in a plastic bag along with the warranty registration card, and other accessory items.

Important
Keep your carton and packaging until your appliance has been thoroughly inspected and found to be in good condition. If there is damage, the packaging will be needed as proof of damage in transit. Afterwards please dispose of all items responsibly.

WARNING

WARNING - Dispose of the plastic bags which can be a suffocation hazard.

Note to Customer
This merchandise was carefully packed and thoroughly inspected before leaving our plant. Responsibility for its safe delivery was assumed by the retailer upon acceptance of the shipment. Claims for loss or damage sustained in transit must be made to the retailer.

NOTE

DO NOT RETURN DAMAGED MERCHANDISE TO THE MANUFACTURER - FILE THE CLAIM WITH THE RETAILER.

CAUTION

If the appliance was shipped, handled, or stored in other than an upright position for any period of time, allow the appliance to sit upright for a period of at least 24 hours before plugging in. This will assure oil returns to the compressor. Plugging the appliance in immediately may cause damage to internal parts.

Template For Installing the Name Badge

To Install, use the template below to locate the name badge on the door. Remove the adhesive and apply the name badge to the door.

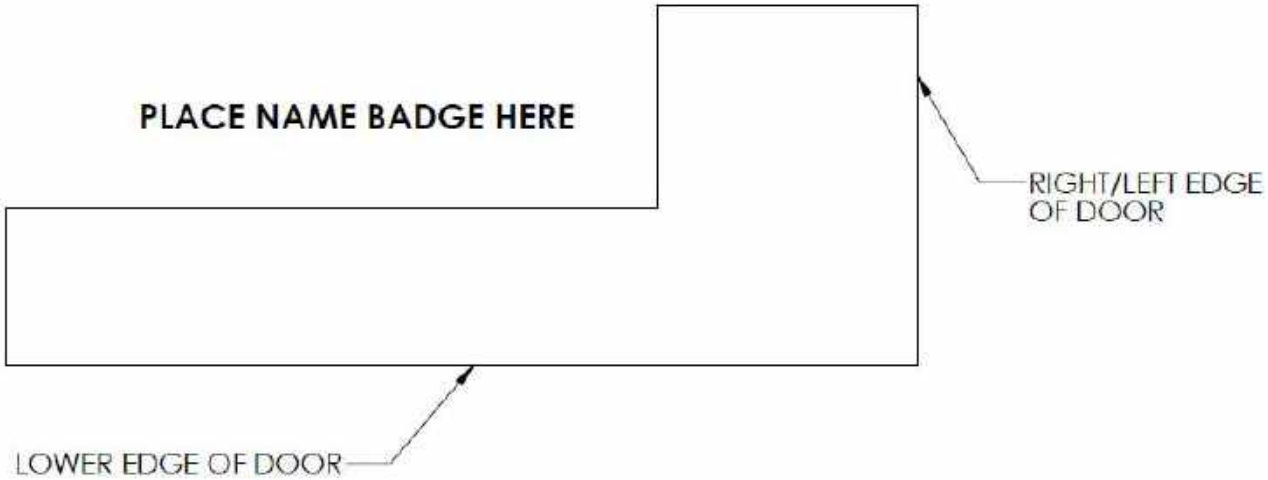

****CUT ALONG OUTER EDGES OF TEMPLATE****

INSTALLING YOUR APPLIANCE

⚠ WARNING

WARNING - Help Prevent Tragedies
Child entrapment and suffocation are not problems of the past. Junked or abandoned refrigerators are still dangerous - even if they sit out for "just a few hours".

If you are getting rid of your old refrigerator, please follow the instructions below to help prevent accidents.

Before you throw away your old refrigerator or freezer:

- Take off the doors or remove the drawers.
- Leave the shelves in place so children may not easily climb inside.

Outdoor Installation
Do not install in a location where the ice machine will be exposed to direct sun exposure as this may result in unsatisfactory performance.

Select Location
The proper location will ensure peak performance of your appliance. We recommend a location where the ice machine will be out of direct sunlight and away from heat sources. To ensure your product performs to specifications, the recommended installation location temperature range is from 55 to 90°F (13 to 32°C) for built in ice machines and 55 to 100°F (13 to 38°C) for freestanding ice machines. Ice machines will not perform correctly in ambient temperatures less than 55°F (13°C).

Cabinet Clearance
Ventilation is required from the bottom front of the appliance. Keep this area open and clear of any obstructions. Adjacent cabinets and counter top can be installed around the appliance as long as the front grille remains unobstructed. Overlay door models with articulated hinges are intended for built-in applications only

⚠ CAUTION

Front Grille
Do not obstruct the front grille. The openings within the front grille allow air to flow through the condenser heat exchanger. Restrictions to this air flow will result in increased energy usage, loss of cooling capacity and low ice production. For this reason it is important this area not be obstructed and the grille openings kept clean. Lynx Grills does not recommend the use of a custom made grille as air flow may be restricted. (See Figure 2).

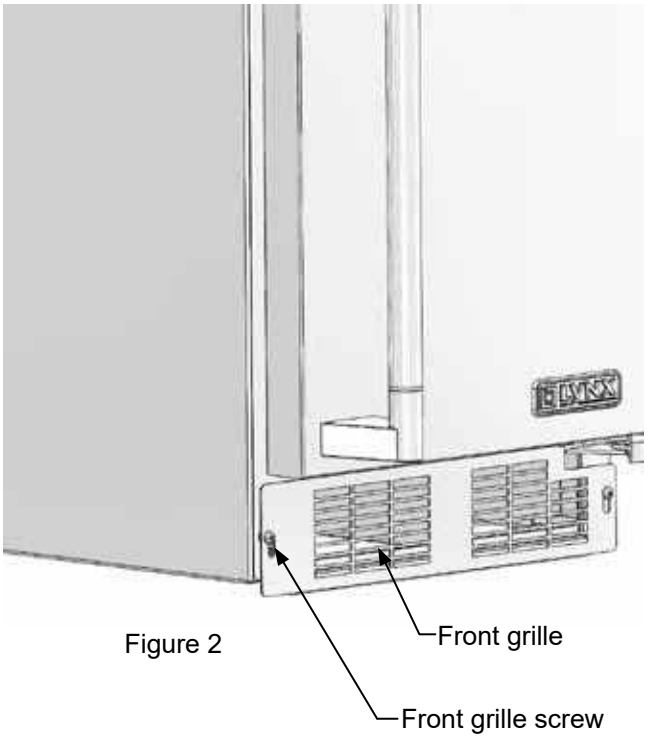

Figure 2

Leveling Legs
Adjustable legs at the front and rear corners of the appliance should be set so the unit is firmly positioned on the floor and level from side to side and front to back. The overall height of your Lynx appliance may be adjusted between the minimum, 33¾" (85.7 cm), by turning the leveling leg in (CW ↻) and the maximum, 34¾" (88.3 cm) by turning the leveling leg out (CCW ↺).

To adjust the leveling legs, place the appliance on a solid surface and protect the floor beneath the legs to avoid scratching the floor. With the assistance of another person, lean the appliance back to access the front leveling legs. Raise or lower the legs to the required dimension by turning the legs. Repeat this process for the rear by tilting the appliance forward using caution. On a level surface check the appliance for levelness and adjust accordingly.

The front grille screws may be loosened and the grille adjusted to the desired height. When adjustment is complete tighten the two front grille screws. (See Figure 3).

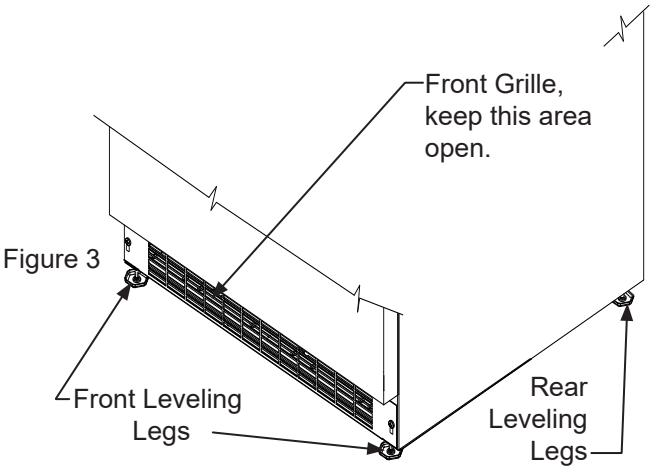

Figure 3

INSTALLING YOUR APPLIANCE

Model	Minimum Height	Maximum Height
LN15ICE	33 3/4" (85.7 cm)	34 3/4" (88.3 cm)

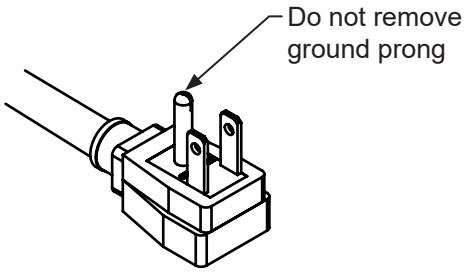

Figure 4

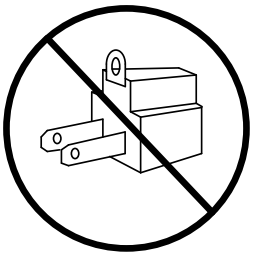

Figure 5

⚠ WARNING

Electrical Shock Hazard

- Do not use an extension cord with this appliance. They can be hazardous and can degrade product performance.
- This appliance should not, under any circumstances, be installed to an un-grounded electrical supply.
- Do not remove the grounding prong from the power cord. (See Figure 4.)
- Do not use an adapter. (See Figure 5).
- Do not splash or spray water from a hose on the appliance. Doing so may cause an electrical shock, which may result in severe injury or death.

Electrical Connection

A grounded 115 volt, 15 amp dedicated circuit is required.

This product is factory equipped with a power supply cord that has a three-pronged, grounded plug. It must be plugged into a mating grounding type receptacle in accordance with the National Electrical Code and applicable local codes and ordinances (see Figure 6). If the circuit does not have a grounding type receptacle, it is the responsibility and obligation of the customer to provide the proper power supply. The third ground prong should not, under any circumstances, be cut or removed.

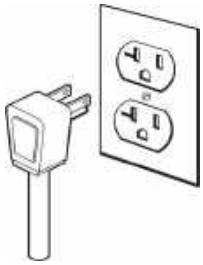

Figure 6

NOTE

Ground Fault Circuit Interrupters (GFCI) are prone to nuisance tripping which will cause the appliance to shut down. GFCI's are generally not used on circuits with power equipment that must run unattended for long periods of time, unless required to meet local building codes and ordinances.

DOOR REVERSAL

Door Reversing Instructions

1. Open door.

2. Loosen screw #1 and #2 using a Philips Screwdriver on top and bottom hinge. Slide door and remove the door from the unit.

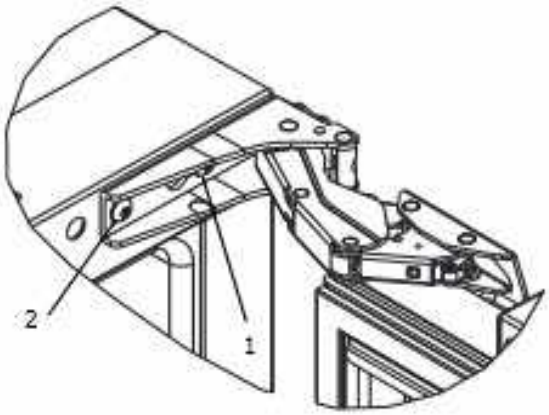

Figure 7

3. Once door is removed, using a Philips Screwdriver remove screws from magnet actuator located on inside and bottom of door. (On Integrated Models magnet actuator will be located on bottom of door.

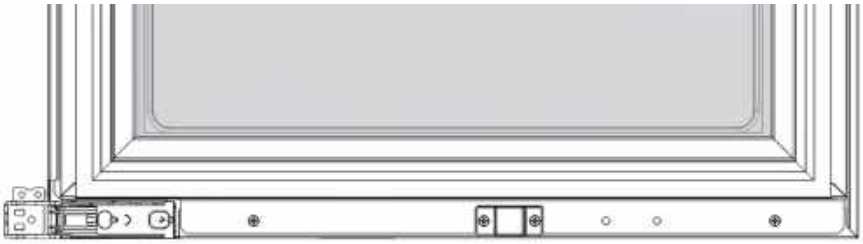

Figure 8

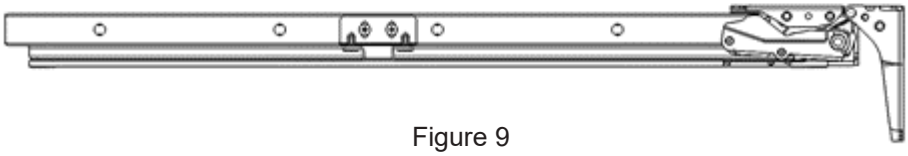

Figure 9

4. Remove caps from top of door. Using a Philips Screwdriver, install magnet actuator on opposite side. Install caps into opposite side.

5. Remove caps from screw holes on opposite side (2 on top and bottom). Using a Philips Screwdriver remove the 4 screws that you previously loosened.

6. Reinstall screws and caps on opposite side.

7. Once screws are partially installed, rotate the door 180°, align the hinge over screw #1 and slide into position. Tighten screws on top and bottom.

8. Door is now reversed.

INSTALLING THE DRAIN PLUMBING

CAUTION

Failure to use an adequate drainage system, will result in surrounding water damage and/or poor ice production.

WARNING

Electrical Shock Hazard

Reasonable care and safe methods should be practiced. Do NOT work with energized electrical equipment in a wet area. Read and follow the installation instructions listed in this manual.

Drain Plumbing

Your ice machine requires drain plumbing. If drain is above 6 inches it will require a drain pump. See optional drain pump section below.

Gravity Drain (no drain pump):

The ice machine is shipped with the drain line installed, coiled and secured to the back of the cabinet as shown in Figure 10. It can be uncoiled, routed to an appropriate drain and cut to length as required. Additionally there is the provision of drain routing through the cut-out in the bottom of the unit, (see the gray area in Figure 11). A drain can be installed in this gray area with the drain line cut to a short length and positioned into the drain as shown in Figure 12, or if the ice machine is to be built-in, the drain tube could be routed through a hole in the floor in this gray area to a drain below.

CAUTION

The gravity drain line must be routed no higher than 6" (15.2 cm) off the floor to assure proper drainage.

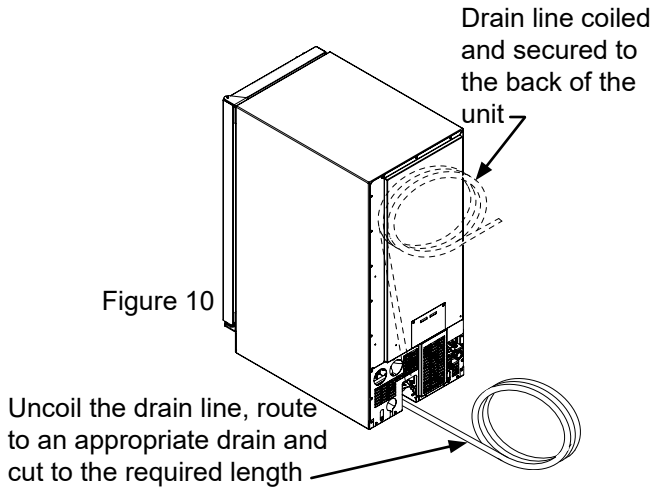

Figure 10

CAUTION

Observe and follow all local building codes when installing this ice machine and drain lines.

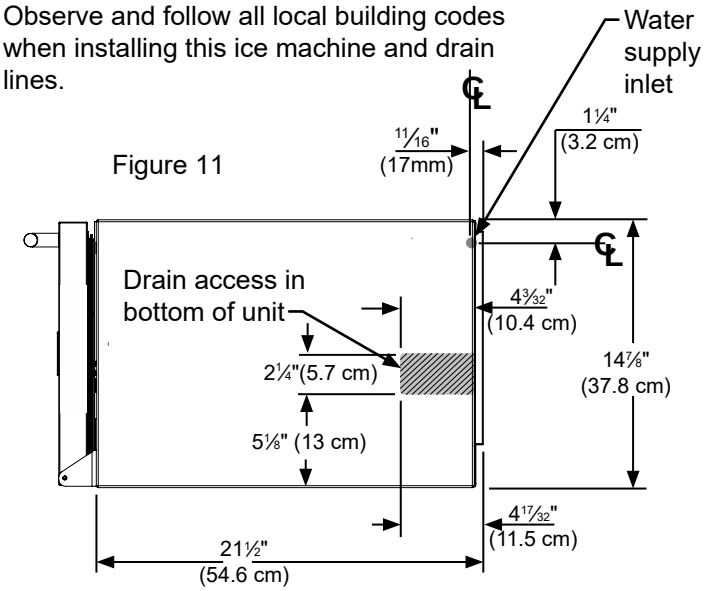

Figure 11

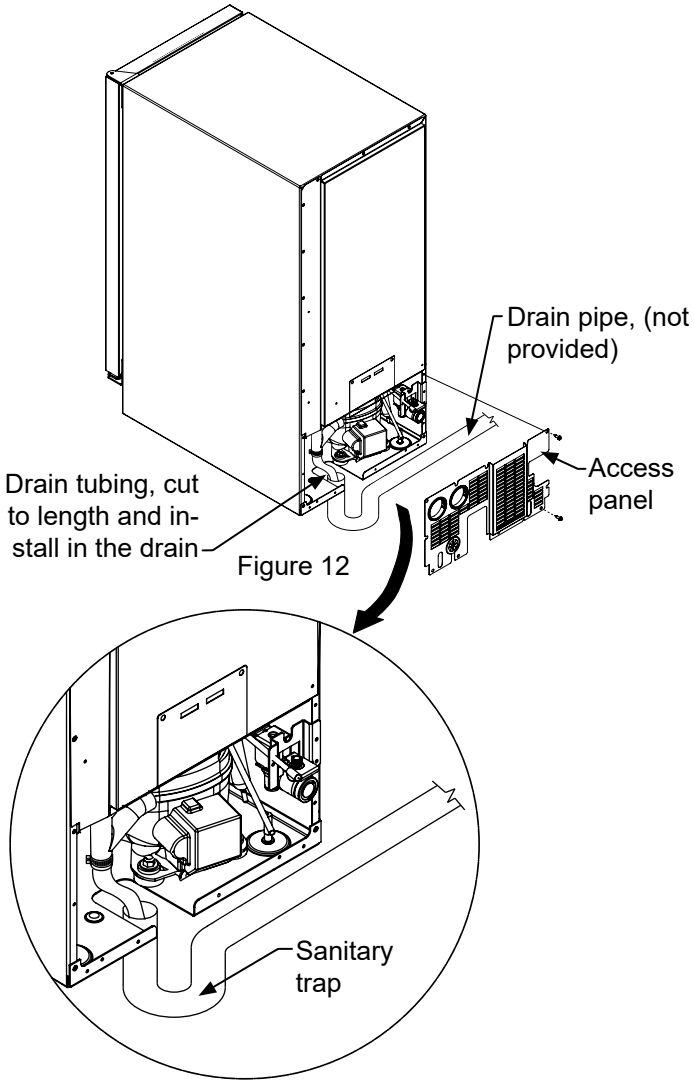

Figure 12

INSTALLING THE DRAIN PLUMBING

Optional Drain Pump.
An optional drain pump is available if you have purchased an ice machine without one and do not have access to a gravity drain. Installation instructions are provided with the optional drain pump. Contact Lynx Grills Customer Service at 888.289.5969 or your dealer for ordering.

CAUTION

This drain pump is designed to be installed in Lynx ice machines only and approved for use with water only.

WARNING

Electrical Shock Hazard
Risk of electrical shock or personal injury could occur due to moving components, if the machine compartment access cover is removed before unplugging the ice machine power cord.

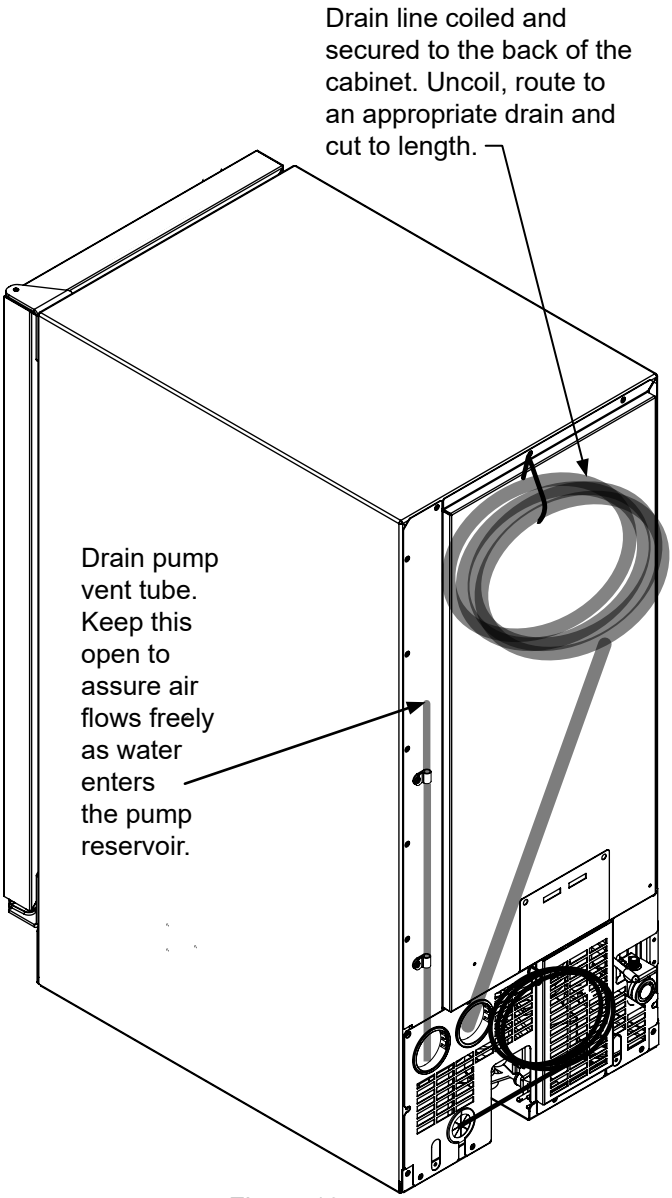

Figure 13

INSTALLING THE WATER SUPPLY

Water Supply

CAUTION

Observe and follow all local building codes when installing this appliance.

This ice machine must be connected to a potable cold water supply line. delivering water pressure between a minimum of 20 psi and a maximum of 120 psi.

Use ¼" copper tubing for your water supply which is available at any local hardware or plumbing supply store. Route the ¼" copper tubing to suit your installation being sure not to kink the tubing. Purchase enough copper tubing length to allow a coil to be formed behind the unit for a "service loop" which will allow the appliance to be pulled out from the installation for servicing or cleaning. (See Figure 14). Connect the copper tubing to the "top side" of a cold water pipe to prevent the ice-maker from plugging with sediment.

A shutoff valve is recommended on the water supply line to ease servicing the appliance. **NOTE: A SELF-PIERCING TYPE VALVE IS NOT RECOMMENDED** as they are prone to clogging with sediment which will create pressure drop reducing the water supply to the unit.

Connect the copper tubing water supply to the water valve inlet with a 1/4" compression nut fitting.
IMPORTANT: Secure the water supply line to the back of the cabinet with the screw and strain relief clamp provided in the corner of the back panel. (See Figure 14).

Make certain all connections are watertight after installation. Form the tubing so that it will not vibrate against the cabinet body or kink when your appliance is moved in and out of position.

This ice machine is designed to make clear ice from the majority of water sources on a daily basis. If your results are unsatisfactory, your water may need to be filtered or treated. A water specialist can recommend proper water treatment.

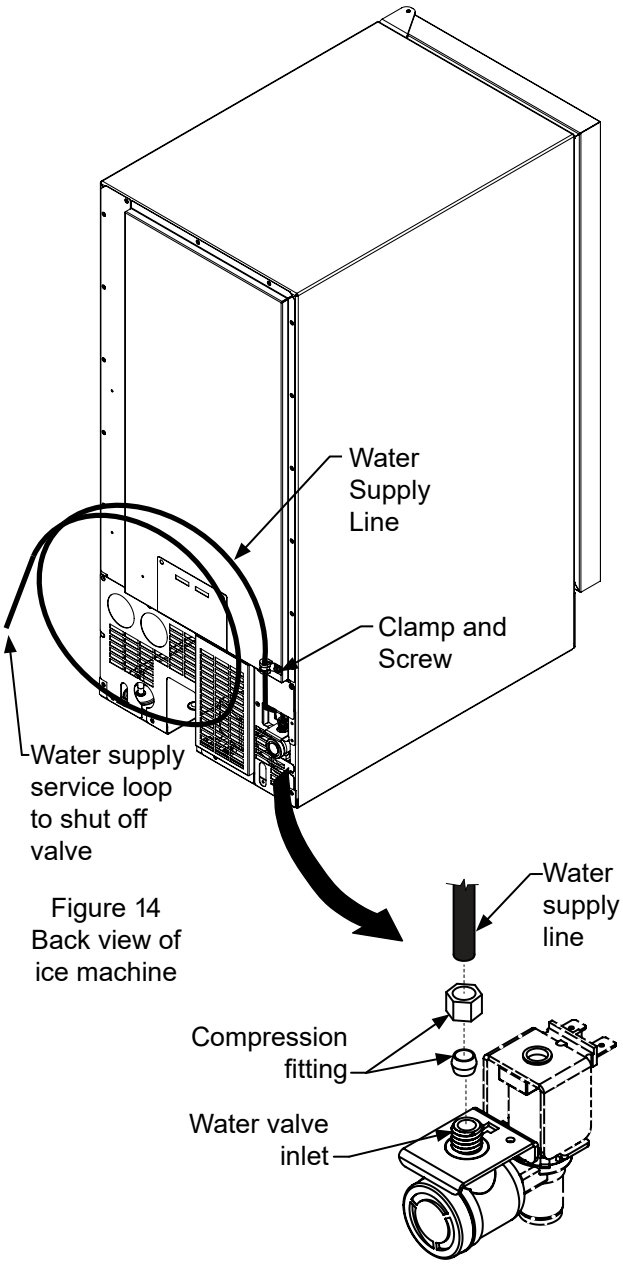

Figure 14
Back view of ice machine

CAUTION

To prevent water leaks:
- The water line fitting is to be used with copper tubing only. Do not use with plastic tubing.
- Do not use any thread sealers on this water line fitting.

NOTE

Reverse osmosis, (RO), water, softened water, and de-ionized water are not recommended as they can adversely affect the quality and quantity of the ice.

DRAIN SYSTEM TEST

CAUTION

Procedure for Testing Drain System
(both gravity and drain pump models)

Drain pump models have a safety feature that will interrupt power to the unit if a high-limit condition occurs to prevent flooding. This safety feature can be initiated by a restriction in the drain system and will continue until high-limit condition is corrected, at which time power will be restored to the unit. Power interruption can be detected when no icons are visible in the display area of the user interface (Figure 15). Once power is returned, a startup chime will sound followed by a self-test, and "OFF" should be visible in the display area.

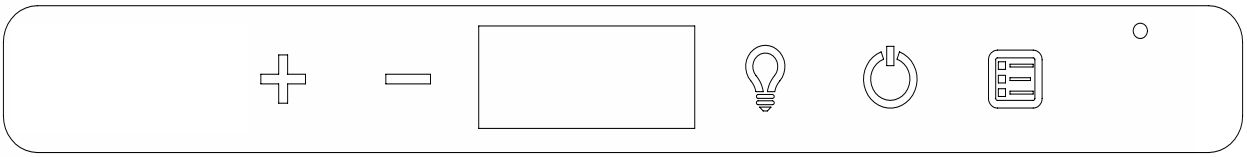

Figure 15: User interface display during power interruption.

Once the drain line is plumbed, perform the following:

1. Plug the ice machine into 115v power supply.
2. Place unit in the final installation location.
3. Turn the unit off via the user interface (display will indicate “OFF”). The drain pump will still be operational during off mode if the unit has one.
4. Slowly pour 3-qts of water into the ice storage bin. All water should drain completely.
5. If water drains fully and without power interruption, the drain system has been successfully tested and further installation of the ice machine can be continued.
6. If the water does not drain or a power interrupt occurs, check the following:
   a. There are no kinks or restrictions in the drain line. (Note: Drain line needs to be cut to the required length and any excess tubing should be removed to prevent possible restrictions).
   b. Your drain line is plumbed into an open drain (Figure 16).
   c. The vent tube on the back of the unit is open (Figure 17).

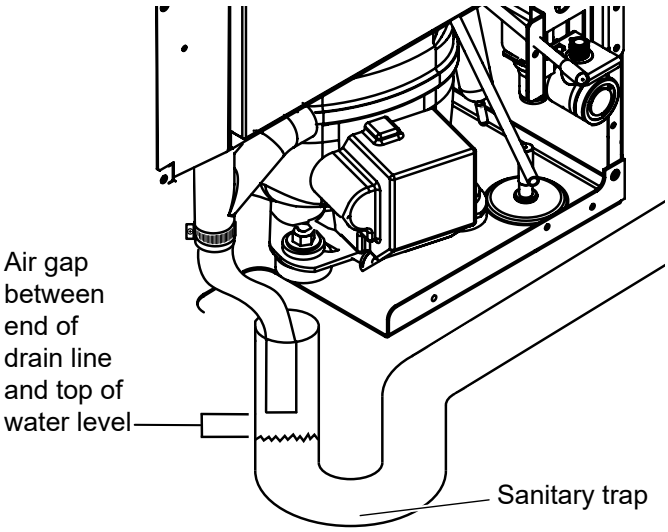

Figure 16: Example of an open drain.

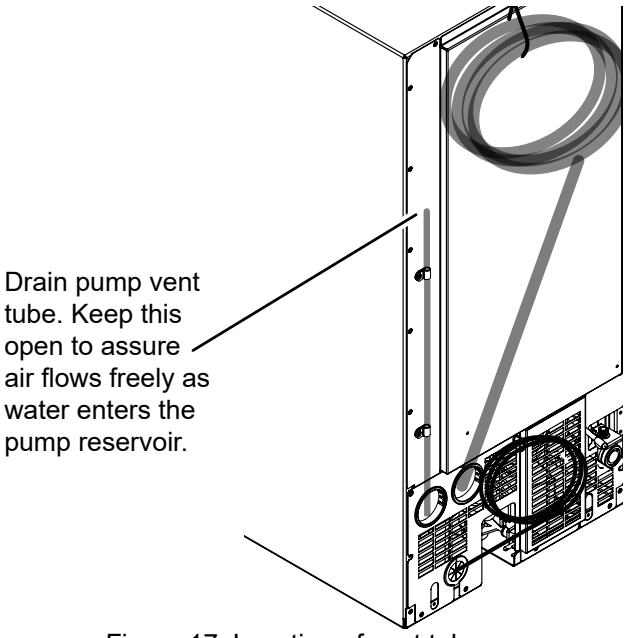

Figure 17: Location of vent tube.

7. After checking the above requirements, repeat step 4 and verify the water drains completely without power interruption. If problems persist call a qualified service technician and/or plumber.

OPERATION OF THE ICE MACHINE

The Ice Making Process

Your ice machine is unique in how it forms ice with fractional freezing to form a slab of ice that is clear and has less dissolved solids than the water it is produced from. This is accomplished by running water over the cold evaporator plate (see Figure 18) which gradually freezes the water to produce the ice slab. Pure water freezes first, leaving the dissolved solids in the residual reservoir water to provide clear ice.

When the ice slab reaches the correct thickness, the ice sheet is released and slides onto the grid cutter (see Figure 18). Here, the ice slab is cut into squares by the grid cut-ter's heated wires (see Figure 21). The water containing the dissolved minerals is drained after each freezing cycle. Fresh water enters the machine for the next ice making cycle.

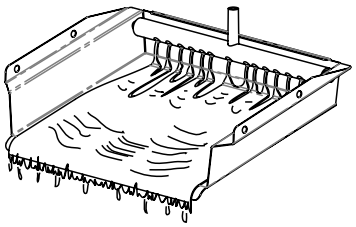

Figure 18

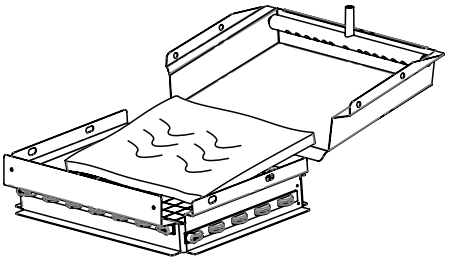

Figure 19

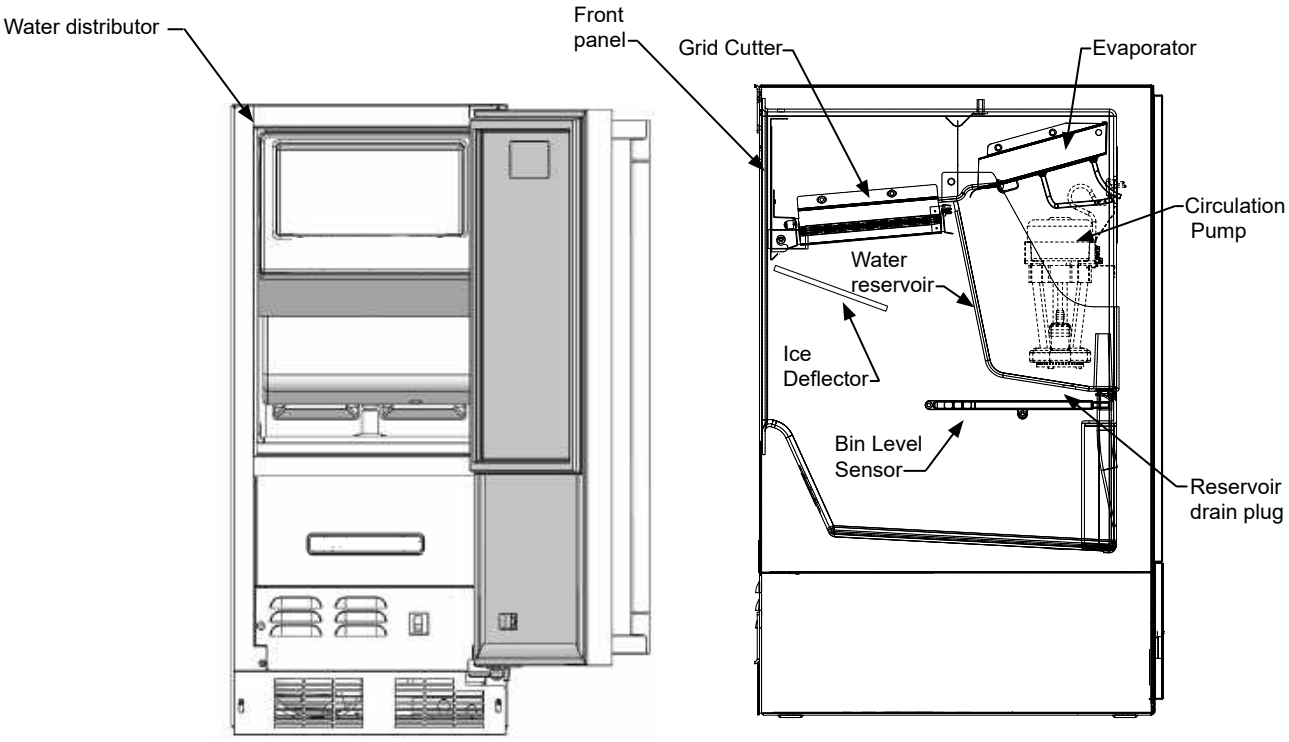

Figure 20

OPERATION OF ICE MACHINE

The ice machine will keep producing ice until the ice machine's bin is full and will restart automatically when ice needs to be replenished in the bin. The ice bin is not refrigerated, and some melting will occur by design to preserve the ice quality and clarity. Allow your ice machine to run for 24-48 hours to accumulate ice in the ice machine's bin.

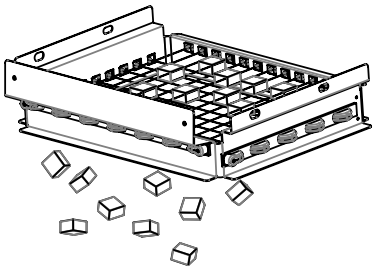

Figure 21

The bin level sensor is located in the ice bin, it senses when the ice supply is low or full and starts or stops the ice making process accordingly.

NOTE

If the water supply is turned off to the ice machine be sure to set the electronic control to the "OFF" position or remove power to the unit.

Ice Production

In normal mode the ice machine will produce up to 39 pounds (17.7 kg) of clear ice in a 24-hour period when installed in a 72°F ambient with a 55°F water supply. In "ECO" mode (see page 16) the ice machine will produce up to 29 pounds (13.2 kg) of clear ice in the 24 hour period.

NOTE

"Initial" ice production and ice accumulated in the storage bin will vary significantly. This is normal. During the first 24-hours of operation the unit will produce up to 39 lbs of ice at the above ambient and water temperature conditions, but when starting with an empty ice storage bin, the storage bin may only accumulate up to 18 lbs of ice. By design, the ice storage bin is maintained at a temperature slightly above freezing to allow the stored ice to slowly melt, to preserve the ice quality and clarity and assure a constant supply of fresh ice. As ice is accumulated in the bin, the ice production rate will overcome the ice melt and the storage bin will fill to capacity.

New Sounds

The ice machine will make sounds that are different than your household refrigerator. Because these sounds are new to you they may be of a concern but are most likely normal. The ice production process will make noises that are not typical in a refrigeration product, ice falling onto hard surfaces, water cascading across the evaporator, and valves opening and closing. Following are some of the sounds that you may hear:

A buzzing sound will be heard when the water valve opens to fill the water reservoir.

A rattling noise which could be water flowing through the water line.

A splashing sound when water is flowing over the evaporator plate and into the water reservoir.

A "thud" when the ice slab is released from the evaporator plate and slides onto the grid cutter.

"Clicks" when the cubes fall into the ice storage bin.

A gurgling sound which is refrigerant flowing in the ice machine.

An air noise from the condenser fan.

PRODUCT DIMENSIONS

	ROUGH-IN OPENING DIMENSIONS			CABINET DIMENSIONS					
MODEL	"A"	"B"	"C"	"D"	"E"	"F"	"G"	"H"	"J"
LN15ICE	15" (38.1 cm)	**34" to 35" (86.4 to 88.9 cm)	24" (61 cm)	14⅞" (37.8 cm)	33¾" to 34¾" (85.7 to 88.3 cm)	23⅝" (60 cm)	25 9/16" (64.9 cm)	37 13/32" (95 cm)	16 11/16" (42.4 cm)

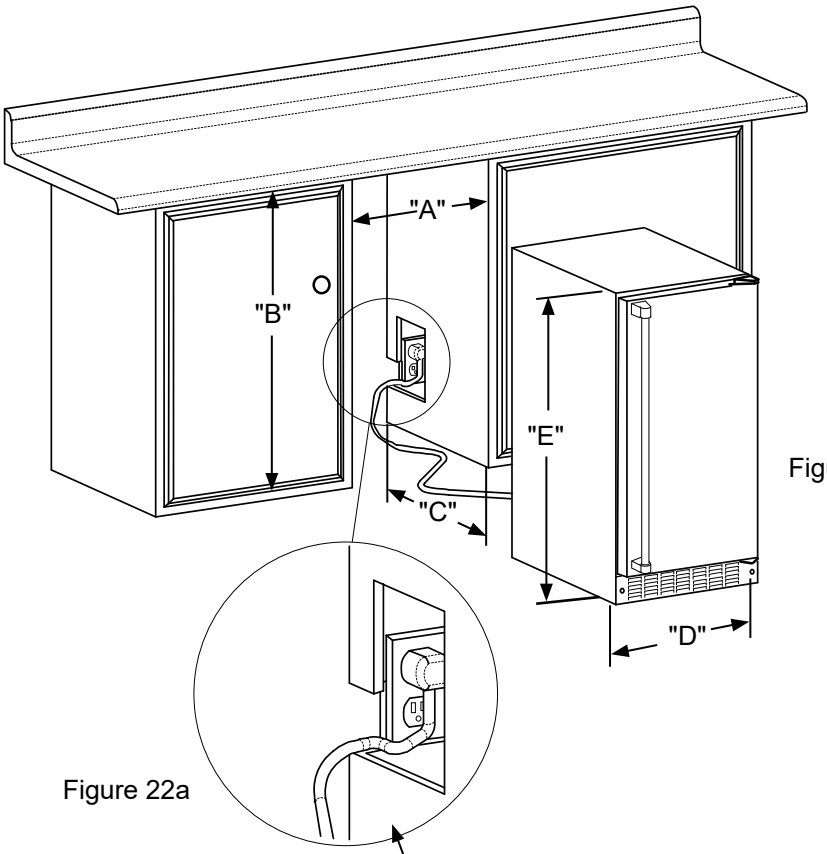

Figure 22

Figure 22a

If necessary to gain clearance inside the rough-in opening a hole can be cut through the adjacent cabinet and the power cord routed through this hole to a power outlet. Another way to increase the available opening depth is to recess the power outlet into the rear wall to gain the thickness of the power cord plug. Not all recessed outlet boxes will work for this application as they are too narrow, but a recessed outlet box equivalent to Arlington #DVFR1W is recommended for this application, (see Figure 23).

Figure 23

PRODUCT DIMENSIONS

	PRODUCT DATA	
MODEL	ELECTRICAL REQUIREMENTS #	PRODUCT WEIGHT
LN15ICE	115V/60Hz/15A	105 lbs (47.7 kg)

** Minimum rough-in opening required is to be larger than the adjusted height of the cabinet.

A grounded 15 amp dedicated circuit is required. Follow all local building codes when installing electrical and appliance.

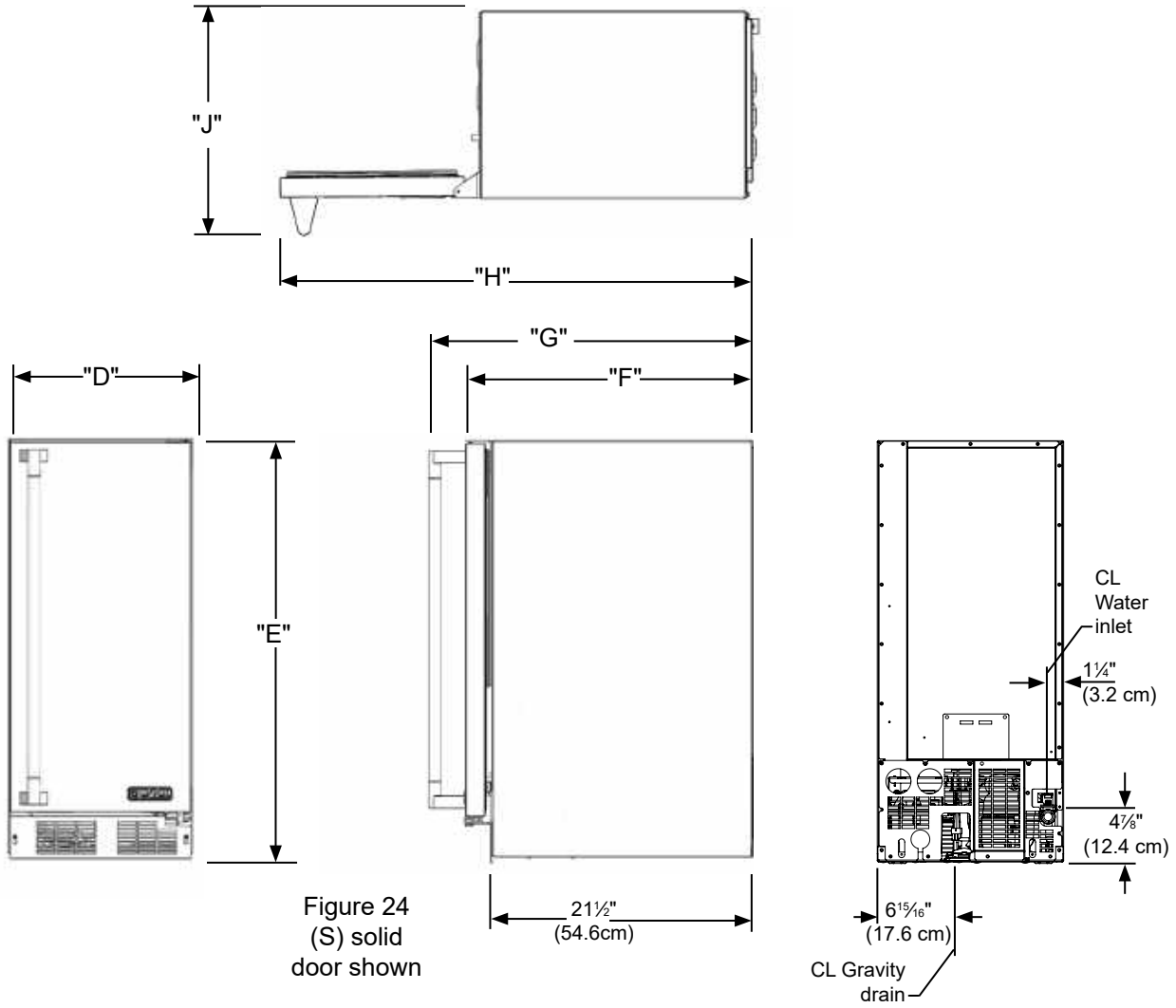

Figure 24
(S) solid
door shown

USING YOUR ELECTRONIC CONTROL

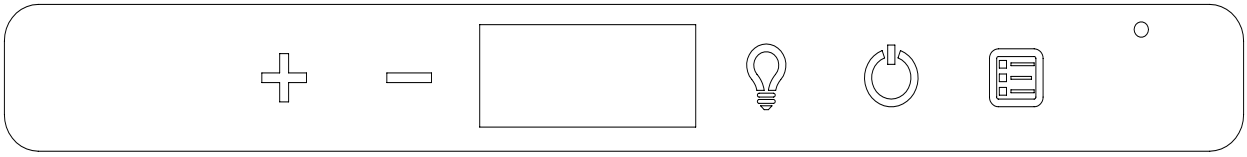

Figure 25 - Electronic control

Control Function Guide

Function	Command	Notes
ON/OFF	Press and release.	Unit will immediately turn ON or OFF.
Enable Sabbath Mode	Press and hold for 5 seconds and release	The °F / °C symbol will flash briefly after 5 seconds. Interior light and display will go dark and remain so until user resets mode - unit continues to operate
Disable Sabbath Mode	Press and release	Display and interior light return to normal operation
Silent Mode (ice production suspended for 3 hours)	Hold and .	Display will countdown the hours: 3H, 2H, 1H
Clean Mode	See “Cleaning” section	
Showroom Mode	Hold and for 5 seconds	The °F / °C symbol will flash. Display will be lit and interior light will function. Unit will not cool. Repeat command to return to normal operation

CLEANING YOUR ICE MACHINE

Clean reminder:
A "CLEAN" reminder will occur every 6 months to remind you that it may be time to clean your appliance. Over time mineral build up on the cold evaporator plate can occur which can adversely affect the quality of your ice. This build-up is dependent on your water source and usage. Normal ice production will continue while the "CLEAN" reminder is displayed. You may clear the "CLEAN" reminder at any time by momentarily pressing the "ON/OFF" icon. When reset, the "CLEAN" reminder will reset and not occur for another 6 months. If you choose to clean the appliance at this time, see the options menu section below.

CLEAN

Clean mode:
To ensure maximum performance and ice quality, it is recommended to clean your ice machine once every six months. This simple cleaning routine will also ensure water and energy use continues at optimum efficiency.

NOTE

Homes with poor water quality or high clear ice usage might require more frequent cleaning.

CAUTION

To clean your ice machine you will need to purchase a "nickel safe" ice maker cleaner (#36684). Cleaner can be obtained by contacting Lynx Grills Customer Service at 888.289.5969.

Once you have your cleaner:
Turn the ice machine off by pressing and holding the "ON/OFF" icon for 3 seconds. "OFF" will be displayed on the control.

OFF

Remove all ice from the ice bin (see Figure 26). Drain the water from the water reservoir by removing the black plug from the bottom of the fresh water reservoir (see Figure 26). After the water is drained, replace the plug in the bottom of the reservoir.

Allow all of the ice to fall from the evaporator plate and remove any ice from the grid cutter. If there is ice embedded in the grid cutter wires, wait for it to melt and fall out. **Do not try to remove ice that is embedded in the grid cutter wires as that may break the wires.** (See Figures 19 and 20).

CAUTION

Forcing ice through the grid cutter will break the grid cutter wires.

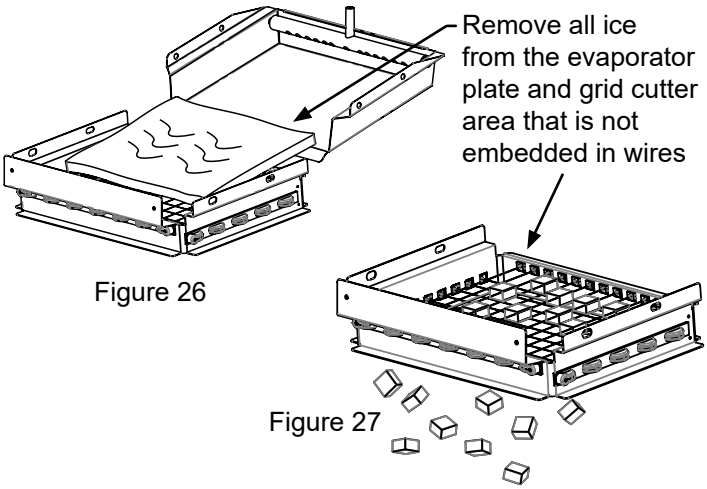

Figure 26

Figure 27

CLEANING YOUR ICE MACHINE

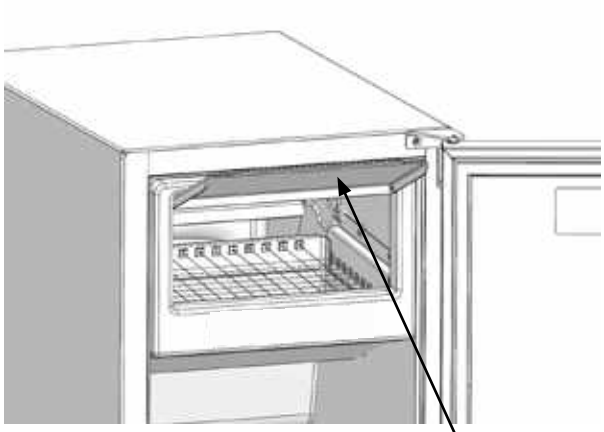

Figure 28

Lift fascia door up to access evaporator plate

Refer to your cleaning solution instructions to determine the proper amount of cleaning solution to add based on 2 quarts (1.9 liters) of water. Lift fascia door up to access evaporator plate (See Figure 29). Pour the cleaning solution slowly on the evaporator plate so it flows down into the fresh water reservoir. (See Figure 30).

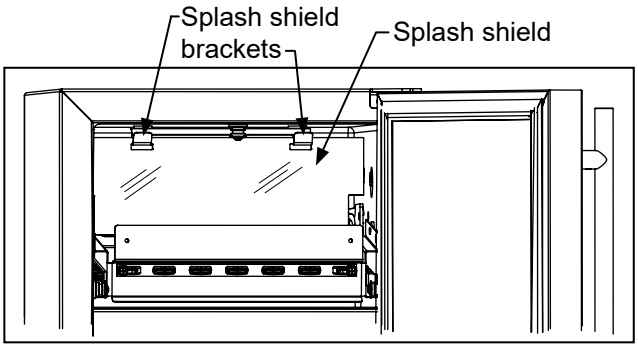

Figure 31

Replace the splash shield if removed.
Turn the ice machine back on by pressing and holding the "ON/OFF" icon for 3 seconds. The display will indicate "ICE" mode. Press and hold the "MENU" icon until a flashing "CLEAN" is displayed. Press the "ON/OFF" icon until "CLEAN" stops flashing. Your ice machine will now enter the clean cycle.

ICE

CLEAN

OFF

The clean and rinse cycle will take about 49 minutes.

After the clean cycle is complete the ice machine will return to the "OFF" position.

After the cleaning cycle is completed, verify that all build-up has been removed. If not repeat the clean cycle procedure.

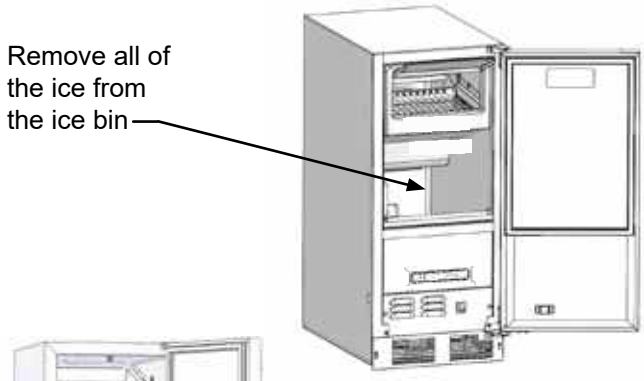

Figure 29

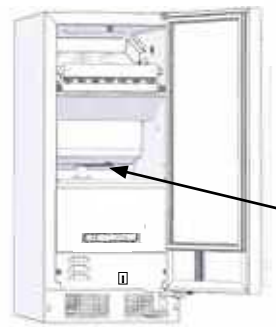

Figure 30

Remove the black reservoir drain plug from the bottom of the reservoir.

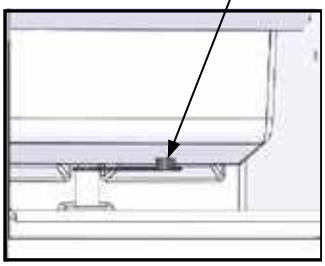

Figure 30b

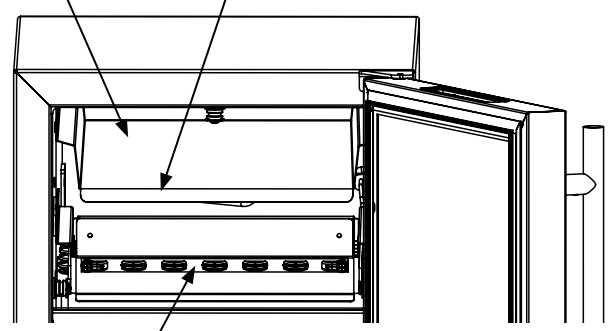

Figure 32

CARE AND CLEANING AND ENERGY SAVING TIPS
OBTAINING SERVICE

Front Grille
Be sure that nothing obstructs the required air flow openings in front of the cabinet. At least once or twice a year, brush or vacuum lint and dirt from the front grille area (see page 4).

⚠ CAUTION

SHOCK HAZARD: Disconnect electrical power from the appliance before cleaning with soap and water.

Cabinet
The painted cabinet can be washed with either a mild soap and water and thoroughly rinsed with clear water. NEVER use abrasive scouring cleaners.

Cleaning
Routine cleaning of the stainless steel surfaces will serve to greatly extend the life of your product by removing contaminants. This is especially important in coastal areas which can expose the stainless to sever contaminants such as halide salts (sodium chloride).

It is strongly recommended to periodically inspect and thoroughly clean crevices, weld points, under gaskets, rivets, bolt heads, and any locations where small amounts of liquid could collect, become stagnant, and concentrate contaminants. Additionally, any mounting hardware that is showing signs of corrosion should be replaced.

Interior
Wash interior compartment with mild soap and water. Do NOT use an abrasive cleaner, solvent, polish cleaner, undiluted detergent or chlorine based cleaners.

Care of Appliance
1. Avoid leaning on the door, you may bend the door hinges or tip the appliance.
2. Exercise caution when sweeping, vacuuming or mopping near the front of the appliance. Damage to the grille can occur.
3. Periodically clean the interior of the appliance as needed.
4. Periodically check and/or clean the front grille as needed.

In the Event of a Power Failure
If a power failure occurs, try to correct it as soon as possible. Minimize the number of door openings while the power is off so as not to adversely affect the appliance's temperature.

Light assembly replacement
All models use LED lamps to illuminate the interior of the appliance. This component is very reliable, but should one fail, contact the Lynx Grills Customer Service at 888.289.5969 for replacement of the LED.

Energy Saving Tips
The following suggestions will minimize the cost of operating your ice machine appliance.
1. Do not install your appliance next to a hot appliance, (stove, dishwasher, etc.). heating air duct, or other heat sources.
2. Install product out of direct sunlight.
3. Assure the front grille vents at front of the ice machine beneath the door are not obstructed and kept clean to allow ventilation for the refrigeration system to expel heat.
4. Plug your appliance into a dedicated power circuit. (Not shared with other appliances).
5. Minimize door openings and duration of door openings.
6. Set the control to the “off” position if accessing the interior to spot clean or remove large quantities of ice requires the door to be open for an extended period of time.
7. Use ECO mode if maximum ice production quantities are not required.
8. Use the delay start function if the ice machine will not be used for long periods of time.

If Service is Required:
- If the product is within the first year warranty period please contact your dealer or call Lynx Grills Customer Service at 888.289.5969 for directions on how to obtain warranty coverage in your area.
- If the product is outside the first year warranty period, Lynx Grills Customer Service can provide recommendations of service centers in your area.
- In all correspondence regarding service, be sure to give the service number, serial number, and proof of purchase.
- Try to have information or description of nature of the problem, how long the appliance has been running, the room temperature, and any additional information that may be helpful in quickly solving the problem.
- Table "C" is provided for recording pertinent information regarding your product for future reference.

For Your Records	
Date of Purchase	
Dealer’s name	
Dealer’s Address	
Dealer’s City	
Dealer’s State	
Dealer’s Zip Code	
Appliance Serial Number	
Appliance Service Number	
Date Warranty Card Sent (Must be within 10 days of purchase).	

Table C

TROUBLESHOOTING THE ICE MACHINE

Before You Call for Service
If the appliance appears to be malfunctioning, read through this manual first. If the problem persists, check the trouble-shooting guide below. Locate the problem in the guide and refer to the cause and its remedy before calling for service. The problem may be something very simple that can be solved without a service call. However, it may be required to contact your dealer or a qualified service technician.

Troubleshooting guide:

Ice Machine Operation
Ice machine does not operate

Is the ice machine's power cord plugged in? Plug the power cord into a grounded 3 prong outlet.

Is the electronic control showing the "ICE" position? Check the control to be sure it is in the "ICE" position.

Is a fuse blown or a circuit breaker been tripped? Replace a blown fuse or reset a tripped circuit breaker.

Is the temperature of the room cooler than it normally is? The minimum room temperature is 55°F (13°C). The bin thermistor may be sensing the room temperature and shut off before the bin is full of ice. If the room temperature remains low the ice machine may not restart.

Is there a drain pump in the ice machine? The drain pump is designed to temporarily shut the unit off when large quantities of water create a high-limit condition. Wait a few minutes as the drain pump will continue to operate to dispose of the excess water. If there is still water in the ice bin check the drain pump vent line and drain line for obstructions or kinking.

The ice machine is noisy
Many sounds of an ice machine are different than your household refrigerator. This subject is discussed on page 11, but check the following:

Do you hear water being circulated in the ice machine? This is a normal sound as water is added once every ice making cycle.

Is there a "whoosing" sound? Make sure water is getting to the ice machine. Also check to make sure the drain plug is fully seated in the water reservoir.

Is there an ice slab caught between the evaporator plate and the grid cutter? First check to see if the ice machine is level. If the ice machine is level run a cleaning cycle.

WARNING

Electrocution Hazard

- Never attempt to repair or perform maintenance on the appliance until the main electrical power has been disconnected. Turning the appliance control "OFF" does not remove electrical power from the unit's wiring.
- Replace all parts and panels before operating.

Ice Production
Little or no ice production from the ice machine

Is the electronic control set to the "ICE" position? Check the control to be sure it is in the "ICE" position.

Is water getting to the ice machine? Make sure nothing is restricting the water supply such as a closed water valve or a blown fuse or tripped circuit breaker, or a kinked supply line, or low water pressure.

Has the ice machine just been started? A typical ice production cycle can take up to 1½ hours. Initial start up cycles can take longer. Check the ice machine after 24 hours for ice accumulation in the bin.

Is the reservoir drain plug in place? Check that the reservoir drain plug is properly seated.

Is the water distributor tube restricted? Run a cleaning cycle to clean the ice machine. Also check any filters to make sure they are not restricted.

Is the condenser fan air flow restricted? Make sure the grille in the front of the ice machine is open for proper air circulation.

Is the room and/or water temperature to warm? Move the ice machine to an area where the ambient temperature is below 90°F (32°C) for built-in ice machines or below 100°F (38°C) for freestanding ice machines. The ice machine should not be placed next to a heat source such as an oven. Check the cold water connection.

Is there scale build up in the ice machine? If there is scale build up on the evaporator, the ice machine needs to be cleaned. See "Cleaning the Ice machine".

TROUBLESHOOTING THE ICE MACHINE

Ice Quality

Odor, grey color, or off taste in the ice

Is there mineral scale build up on the evaporator plate? The ice machine needs cleaning. See “Cleaning the Ice Machine”.

Is there a high mineral content in the water? The water may need to be filtered.

Are food items being stored in the ice bin? Remove food from the ice bin.

Unpleasant Odors may require the use of a charcoal filter on the water supply line.

Clumps of ice

Are there clumps of ice in the bin? If the ice isn’t used on a regular basis it will melt and form into clumps. Break up the ice clumps with the ice scoop.

Ice cubes are too big or too small

Is there low ice consumption? Ice is slowly melting in the ice bin which will affect the size of the cubes. This is normal. When the ice bin needs to be replenished, cubes will return to the regular size.

Is the ice slab releasing? Clean the evaporator. See “Cleaning the Ice Machine”.

Is the distributor tube restricted? Check the water line to the ice machine to make sure there are no restrictions or kinks in the line. Check all filters to make sure they are not restricted. Check that the water flows evenly out of the distributor tube, if not, clean the ice machine. See “Cleaning the Ice Machine”.

Plumbing Problems

Is the drain hose aligned over the drain? Move the ice machine to align the drain.

Is the ice machine draining properly? Check that there are no kinks or restrictions in the drain lines; this can cause water to back up in the ice bin. Check that foreign material is not blocking the ice bin drain located at the right rear corner of the ice bin. Check the drain pump discharge and vent line or any restrictions or kinks. Check that the drain pump is level.

NOTE

If there are plumbing issues outside of the ice machine, they cannot be repaired by the service technician. A qualified plumber will have to be called.

Troubleshooting the Drain Pump

NOTE

If the **drain pump reservoir** (not the ice machine bin) reaches overfill condition, the power to the ice machine will be shut off.

If the ice machine is not working, check the following:

- Make sure there is power at the receptacle.
- Make sure the ice machine is turned on.
- Make sure the ice bin is not full.

Then check the drain pump:

The pump does not run:

- Make sure the pump is plugged in and there is power to the receptacle.
- Check the inlet to the drain pump for debris and clean as needed. Remove clamps and inlet tube from drain pump to check for and remove debris.
- Make certain the vent line is free of kinks/sharp bends or restrictions.
- Make certain there is enough water to activate the drain pump. It will take at least one (1) quart (.95 liters) of water to activate the drain pump.

The pump runs, but no water is pumped out:

- Check that the vent is clear and free of restrictions.
- Check the discharge line to make certain there are no restrictions.
- Make sure that the discharge tubing has not exceeded the maximum lift of eight (8) feet (2.44 meters) and the horizontal run is not greater than twenty (20) feet (6.1 meters).

The pump runs and then quickly turns off repeatedly:

- Check to make certain the drain pump is level.
- Check that the vent is clear and free of restrictions.

The ice machine is running but not producing ice:

- Check to make sure water is not backing up in the ice bin.

PREPARING THE ICE MACHINE FOR STORAGE

If the ice machine is moved, not used for an extended period of time, or will be in an area that will be near freezing temperatures, it is necessary to remove any remaining water in the ice-making system.

CAUTION

This ice machine must have all water drained and removed to prevent ice machine damage as well as possible water damage to the surrounding area in freezing conditions. These damages are not covered under warranty.

CAUTION

Do not use any type of anti-freeze or other solution as a substitution for properly draining the ice machine.

Clean the Ice Machine

Cleaning the ice machine will help prevent mold and mildew growth as well as sanitize the ice machine for storage or when it is put back into service. See page 16 for instructions for cleaning the ice machine.

WARNING

Electrocution Hazard

Risk of electrical shock or personal injury could occur due to moving components, if machine compartment access cover is removed before unplugging the ice machine.

Draining and Removing Water from the Ice-Making System with a Gravity Drain.

1. Turn off the water supply to the ice machine.
2. Disconnect the water supply fitting at the inlet of the water valve. (See Figure 33a).
3. Change the electronic control to the "CLEAN" position for approximately one (1) minute. This will energize and open the water valve and remove most of the water from the water valve and the water valve's outlet water line to the reservoir.
4. Change the electronic control to the "OFF" position. This will energize and open the drain valve to drain the reservoir and the ice machine drain system.
5. Unplug the ice machine from the electrical outlet.
6. Remove the access cover from the rear of the ice machine. (See Figure 34).

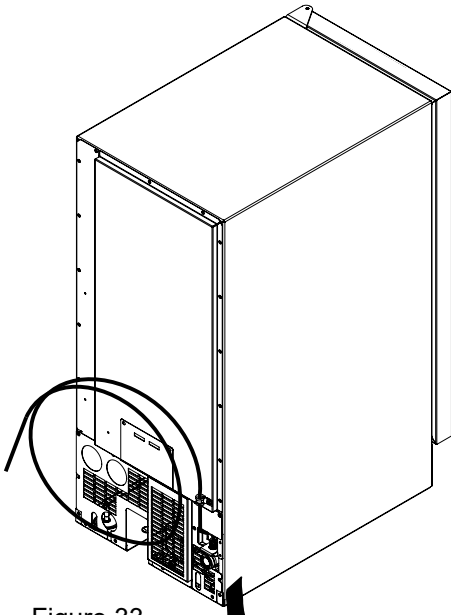

Figure 33
Back view of ice machine

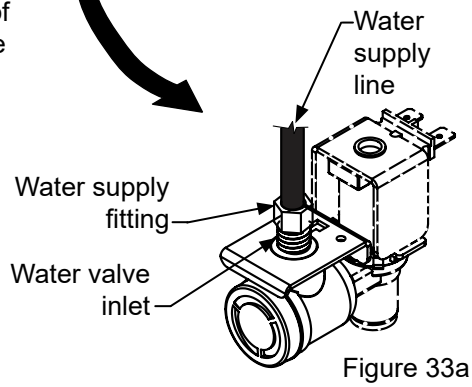

Figure 33a

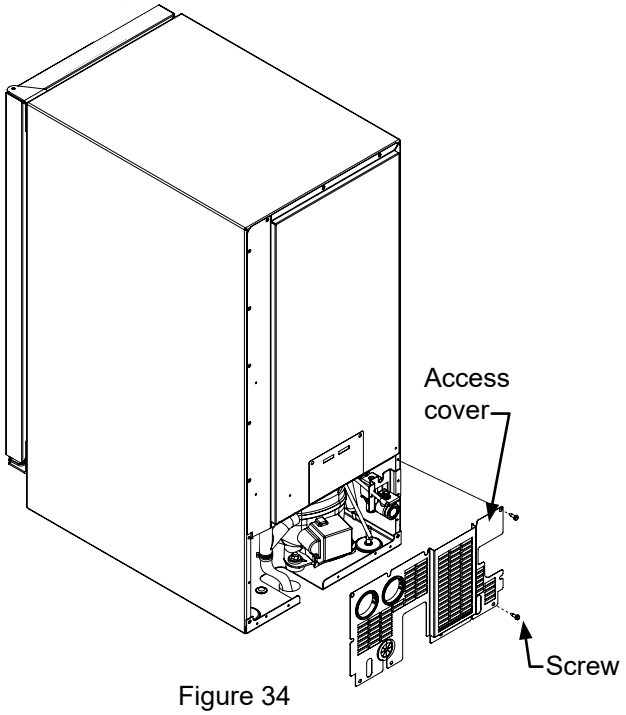

Figure 34

PREPARING THE ICE MACHINE FOR STORAGE

7. Disconnect the water valve's outlet water line to the reservoir and drain the remaining water left in the water line trap area. (See Figure 35 and 35a).

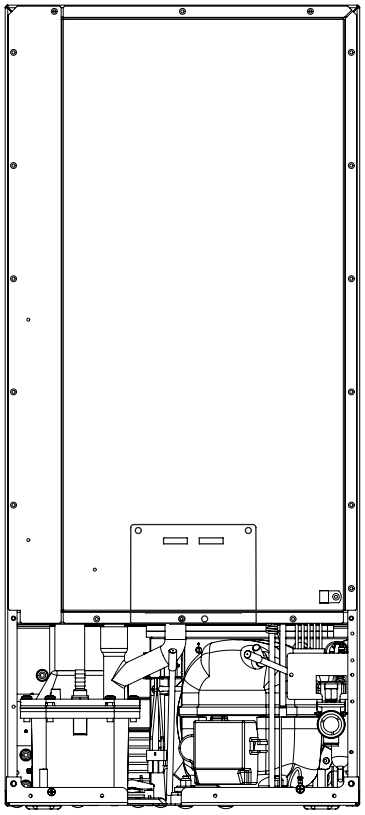

Figure 35

To disconnect the water outlet line: Push up on the white collar and pull the plastic water line from the bottom of the water valve.

To reconnect the water outlet line: Simply insert the plastic tubing into the white collar and push until it stops (about ½", 12 mm, of water line will enter the valve).

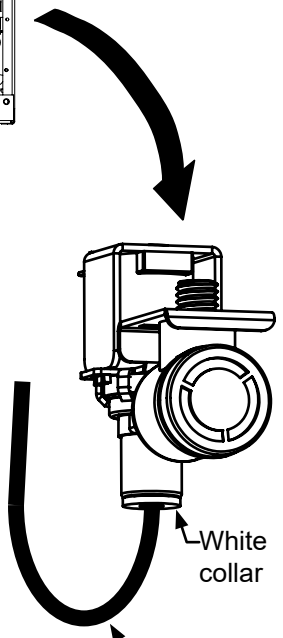

Figure 35a

8. Reconnect the water valve outlet water line. (See Figure 35 and 35a).
9. Reinstall the ice machine's access cover.
10. Clean and dry the ice machine's storage bin.
11. Prop the door open for air circulation to prevent mold and mildew.
12. Leave the water supply line disconnected or reconnect the supply line and leave it shut off. Do NOT turn the water on and allow water to enter back into the water valve.

Draining Water for Factory Installed Drain Pump Applications

Follow steps 1 through 12 for the gravity drain then do the following:

13. Install the winterization plug in the water drain hole inside the ice bin. (See Figure 36).

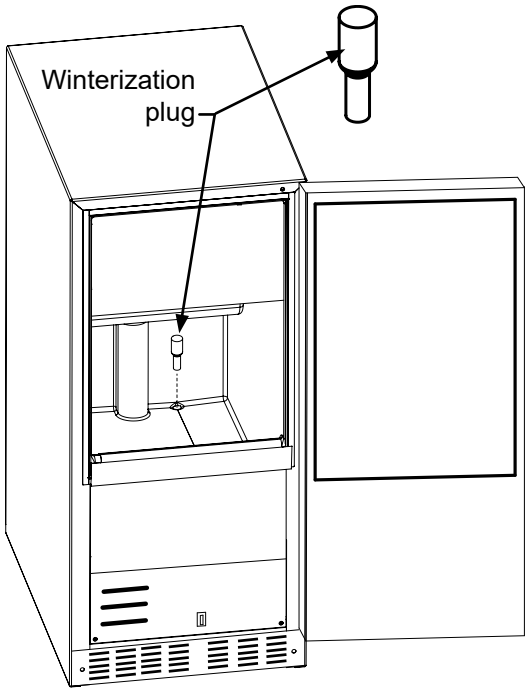

Figure 36

PREPARING THE ICE MACHINE FOR STORAGE

14. Remove the top clamp from the vent tube, for easier access for the air hose.
15. Apply air pressure (approximately 10 psi) to the end of the vent tube which will purge the remainder of the water from the drain pump and the drain line. (See Figure 37).
16. Reinstall the vent tube and clamp to the back of the ice machine and remove the winterization plug from the ice bin and save it for future use.

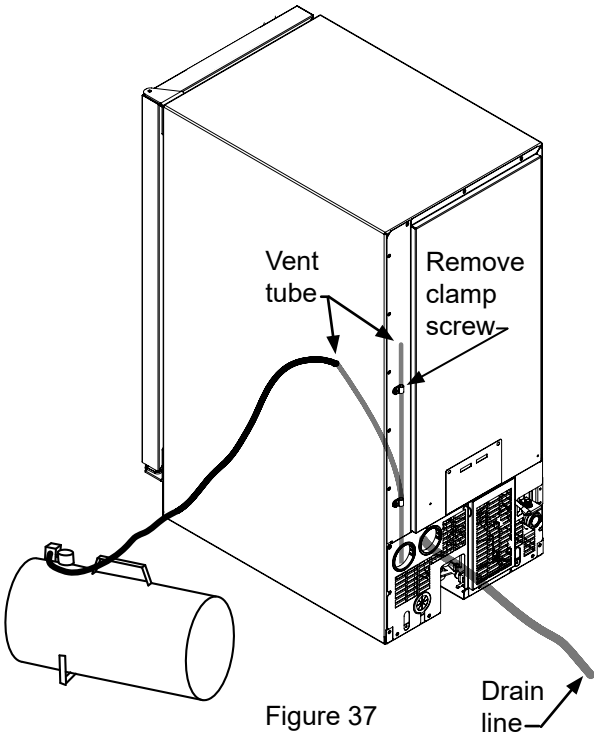

Figure 37

To Restart the Ice Machine

1. Reconnect or turn on the water supply line.
2. Reconnect drain tubing if removed.
3. Plug in the power cord to a wall outlet and turn the ice machine on, (refer to page 15 for turning the ice machine on and off).
4. Check the water inlet, drain lines, and fittings for any water leaks.
5. Check drain pump (if equipped) operation by pouring approximately two (2) quarts of water into the ice storage bin. The drain pump should activate and discharge water (refer to Drain Pump on page 6). Check for water leaks at all hose connections.

Drain Pump Removal Instructions:

1. Unplug the ice machine from the electrical supply and remove the rear access cover from the ice machine.
2. Remove the front panel and the toe grille from the front of the ice machine. See Figures 38 and 38a.
3. Remove the front and rear drain pump brackets. See Figures 40, 40a and 41.
4. Unscrew the 3 hose clamps and remove the 3 hoses from the front of the drain pump. (See Figure 42).
5. Unscrew the leveling leg in the back corner until the end of the threaded portion is flush with the threaded nut insert in the base. (see Figure 38).

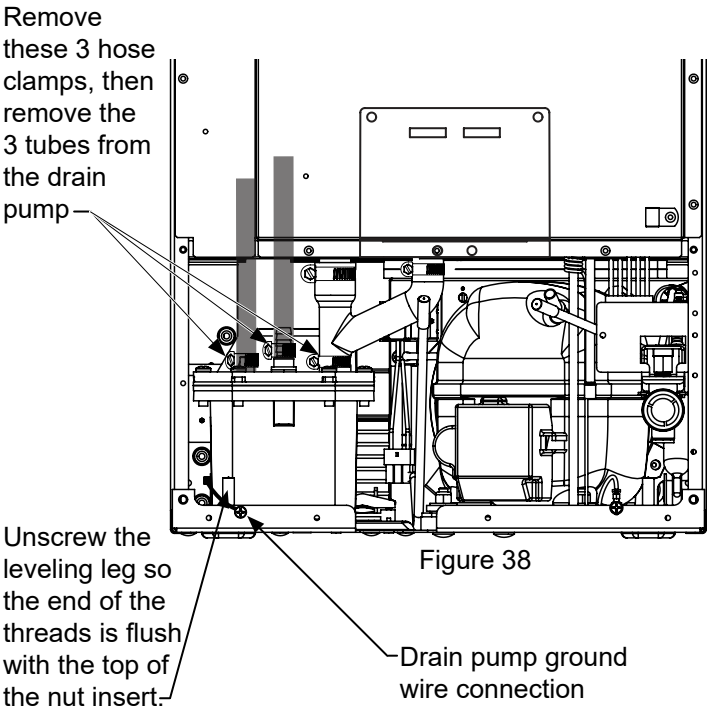

Figure 38

DRAIN PUMP REMOVAL INSTRUCTIONS

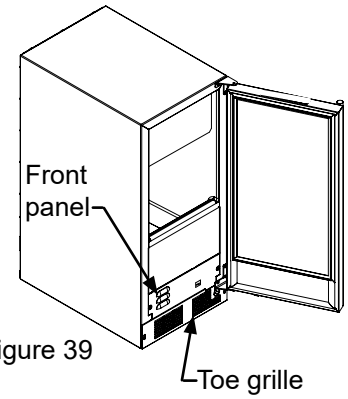

Figure 39

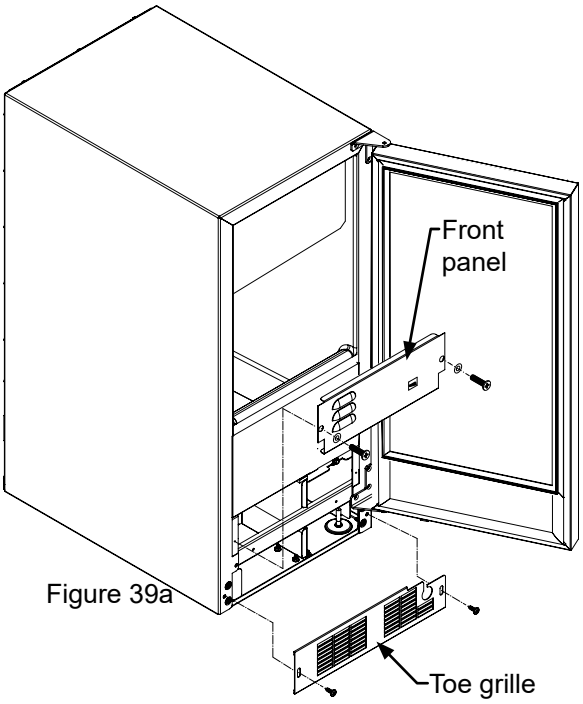

Figure 39a

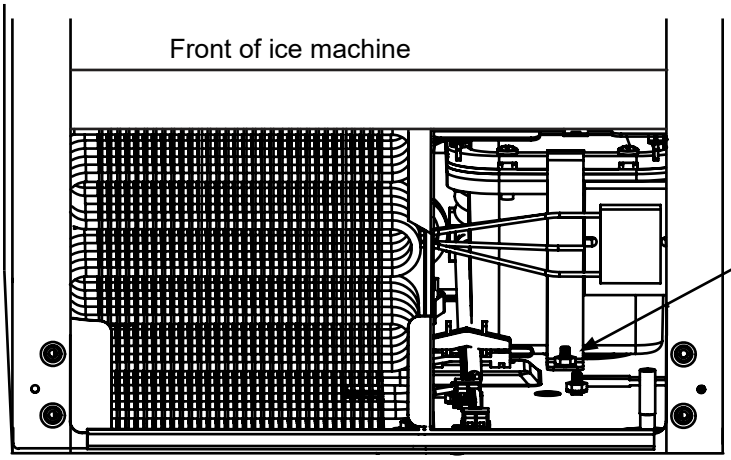

Figure 40

Remove the hex nut on front drain pump bracket with the ⅜" socket then remove the bracket.

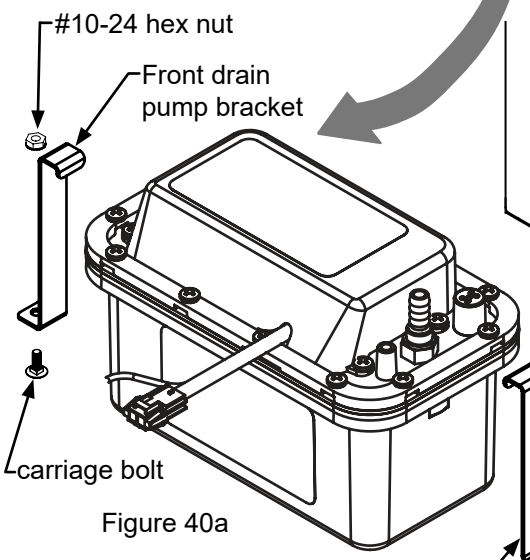

Figure 40a

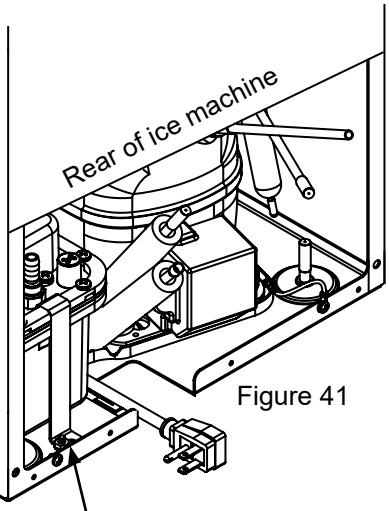

Figure 41

Remove the hex nut on rear drain pump bracket with the ⅜" socket then remove the bracket.

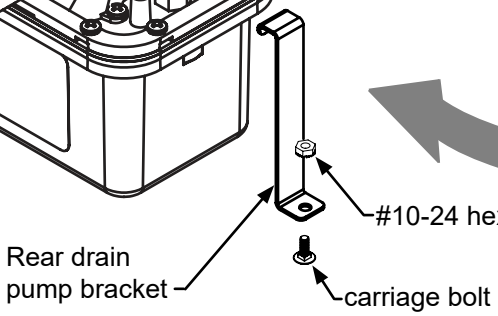

DRAIN PUMP REMOVAL INSTRUCTIONS

6. Rotate the drain pump and remove from the ice machine, (See Figure 42). It may be necessary to disconnect the ground wire connection in the back flange of the cabinet. (See Figure 38).
7. Disconnect the ice machine power cord from the drain pump (See Figure 43).
8. Drain the water in the drain pump's reservoir by turning the pump upside down and allowing water to drain through the pump's inlet and vent tube fittings.
9. Installation of drain pump is reverse of this procedure.

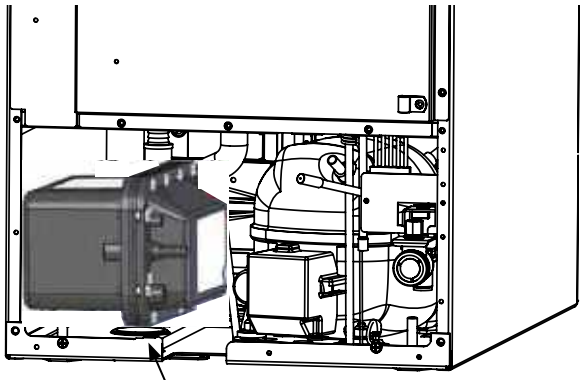

Figure 42

Rotate drain pump and remove from back of ice machine.

Additional issues to be inspected by the installer upon service replacement:

1. The drain pump must be level.
2. No pinched water lines.
3. No interference with electrical cords or wiring.
4. The drain pump should not set on any obstacles, wiring, etc.
5. Secure all hose clamps leading to and from the drain pump.
6. Insure that the vent tube height is adequate - 18 inches minimum.
7. Insure that drain height is adequate - maximum of 8 feet.
8. Insure that drain length is adequate - maximum of 20 feet.
9. Checked for water leaks after installation of the drain pump.
10. Check for vibrations caused by improper installation.
11. Insure that there is no interference with back access cover.
12. Insure that the hole grommets are in place at each location so that any vent or drain tubes do not rub on any sharp surfaces.

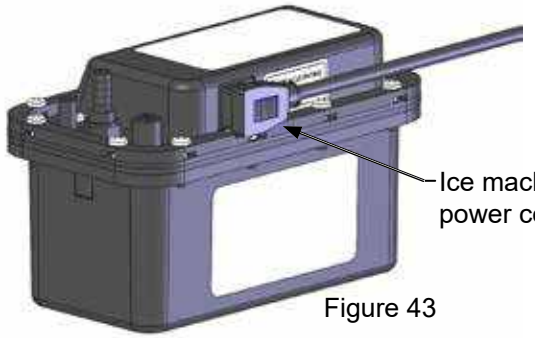

Ice machine power cord

Figure 43

HOUSEHOLD PRODUCT WARRANTY

UNDERCOUNTER ICE MACHINE

ONE YEAR FULL WARRANTY

Undercounter ice machines and all of their component parts, **except as detailed below*†**, are warranted to be free from defective materials or workmanship in normal residential use for a period of one (1) year from the date of original retail purchase. Lynx, warrantor, agrees to repair or replace, at its option, any part which fails or is found to be defective during the warranty period.

***FULL NINETY (90) DAY COSMETIC WARRANTY:** Product is warranted to be free from cosmetic defects in materials or workmanship (such as scratches on stainless steel, paint/porcelain blemishes, etc.) for a period of ninety (90) days from the date of original retail purchase or closing date for new construction, whichever period is longer. Any defects must be reported to the selling dealer within ninety (90) days from date of original retail purchase. Lynx uses high quality processes and materials available to produce all color finishes. However, slight color variation may be noticed because of the inherent differences in painted parts and porcelain parts as well as differences in kitchen lighting, product locations, and other factors. Therefore, this warranty does not apply to color variation attributable to such factors.

†FULL NINETY (90) DAY WARRANTY IN "RESIDENTIAL PLUS" APPLICATIONS: Lynx products are designed and certified for residential use only. They are not intended for use in commercial applications. Lynx products should only be used in accordance to national and local codes. Lynx is not responsible for property damage or injury resulting from use in a commercial application. To support the manufacturing quality of its appliance's Lynx will provide a full 90 day warranty for products used in "Residential Plus "applications. This "Residential Plus" warranty applies to applications where use of the product extends beyond residential use but is in compliance with national and local code. In some jurisdictions these applications are zoned as residential. Examples of, but not limited to, such applications covered by this warranty are bed and breakfasts, fire stations, private clubs, churches, condominium/ apartment common areas etc. Under this "Residential Plus" warranty, the product, its components and accessories are warranted to be free from defective material or workmanship for a period of ninety (90) days from the date of original retail purchase. Lynx warranter agrees to repair or replace, at its option, any part which fails or is found to be defective during the warranty period. This warranty covers parts and labor. **This warranty excludes use of the product in all commercial locations such as restaurants, food service locations and institutional food service locations.**

TWO YEAR LIMITED WARRANTY ON SEALED REFRIGERATION PARTS AS LISTED

Any sealed refrigeration system component, as listed below, which fails due to defective materials or workmanship in normal household use during the second year from the date of original retail purchase will be repaired or replaced, free of charge for the part itself, with the owner paying all other costs, including labor.

Sealed Refrigeration System Components: Compressor, Evaporator, Condenser, Connecting Tubing, Dryer/Strainer

WARRANTY TERMS

This warranty extends to the original retail purchaser of the product warranted hereunder and to each transferee owner of the product during the term of the original purchaser's warranty. The warranty is transferable by the original retail purchaser via home sale only. If a transferee owner is unable to provide proof of purchase from the original purchaser and the product has not been previously registered, the production date of the product, located in the serial number of the product, will serve as the effective warranty start date.

The activation date of the warranty begins from the date of original retail purchase. In the case of new product purchase via building development sales, activation begins from the earlier date of either certificate of occupancy or 24 months from date of manufacture. Note date of manufacture is identified by serial tag on product.

This warranty does not cover units purchased as b-stock, liquidation, salvage, seconds, refurbished, as-is, used products.

This warranty shall apply to products purchased in the United States and Canada. Products must be purchased in the country where service is requested. Warranty service must be performed by a Lynx authorized service agency or representative. Warranty shall not apply to damage resulting from abuse, accident, natural disaster, loss of electrical power to the product for any reason, alteration, improper installation, improper operation, or repair service of the product by anyone other than a Lynx authorized service agency or representative. This warranty does not apply to commercial usage. Warrantor is not responsible for consequential or incidental damage whether arising out of breach of warranty, breach of contract or otherwise. Some jurisdictions do not allow the exclusion or limitation of incidental or consequential damages, if so, the above limitations do not apply to you.

Owner shall be responsible for proper installation, providing normal care and maintenance, providing proof of purchase upon request, and making the product reasonably accessible for service. If the product or one of its component parts contains a defect or malfunction during the warranty period, after a reasonable number of attempts by the warrantor to remedy the defects or malfunctions, the owner is entitled to either a refund or replacement, at the warrantor's discretion of the product or its component part or parts. Warrantor's liability on any claim of any kind, with respect to the goods or services covered hereunder, shall in no case exceed the price of the goods or service or part thereof which gives rise to the claim.

WARRANTY SERVICE

Under the terms of this warranty, service must be performed by a Lynx authorized service agent or representative. Service will be provided during normal business hours. Labor performed at overtime or premium rates shall not be covered by the warranty. To obtain warranty service contact Lynx Customer Care at 1-888-289-5969. Please have model number, serial number, and date of original purchase available when calling. **IMPORTANT:** Retain proof of original purchase to establish warranty period. The return of the owner registration card is not a condition of warranty coverage. You should, however, return the owner registration card so Lynx can contact you should any question of safety arise which could affect you. Any implied warranties of merchantability and fitness applicable to the above described and stainless steel parts are limited in duration to the period of coverage of the applicable express written limited warranties set forth above. Some jurisdictions do not allow limitations on how long an implied warranty lasts, if so, the above limitations may not apply to you. This warranty gives you specific legal rights, and you may also have other rights which may vary from jurisdiction to jurisdiction.

Specifications subject to change without notice.

The best outdoor kitchen products come from:
Lynx Grills
62201 Highway 82 West Greenwood, MS 38930
Service: (888)-289-5969
www.lynxgrills.com

41016411 Rev B
10/19/2023

All specifications and product designs subject to change without notice. Such revisions do not entitle the buyer to corresponding changes, improvements, additions, replacements or compensation for previously purchased products.