OUTDOOR GRILL

BE1-48RCI-N, BE1-48RCI-L, BE1-48RC-N, BE1-48RC-L, BE1-36RCI-N, BE1-36RCI-L, BE1-36RC-N, BE1-36RC-L, BE1-48C-N, BE1-48C-L, BE1-36C-N and BE1-36C-L models

USER GUIDE

⚠ DANGER

IF YOU SMELL GAS

- **Shut off gas to the appliance.**
- **Extinguish any open flame.**
- **Open lid.**
- **If odor continues, keep away from the appliance and immediately call your gas supplier or your fire department.**

⚠ WARNING!

- **Do not store or use gasoline or other flammable liquids or vapors in the vicinity of this or any other appliance.**
- **An LP cylinder not connected for use must not be stored in the vicinity of this or any other appliance.**

CONTENTS

Safety and warnings	4
Installation requirements for Natural Gas	12
Product overview	13
Control panel	14
Planning your cook	15
Setting up the grill	17
Using the grill	18
Using the sear burner (some models only)	19
Using the grates	21
Using the charcoal insert	23
Using the rotisserie (some models only)	25
Using the multi-tool	28
Accessories	29
Cleaning	30
Cleaning the grill burners	31
Cleaning the sear burner	32
Leak testing	34
Changing the gas cylinder	35
Replacing the lights	36
Resetting flow limiting device	37
Troubleshooting	38
Customer care	40

Registration

To register your product visit our website:

USA: dcsappliances.com/us/register

Canada: dcsappliances.com/ca/register

To reduce the risk of fire, electrical shock, injury to persons, or damage when using the appliance, follow the important safety instructions listed below:

⚠ WARNING!

Hot Surface Hazard

Failure to follow this advice may result in burns and scalds or serious injury.

- Accessible parts may become hot during use.
- Hood must be opened before lighting the grill.
- Never let clothing or other flammable materials come in contact with or get too close to any grate, burner or hot surface until it has cooled. Fabric may ignite and result in fire or personal injury. Keep outdoor cooking gas appliance area clear and free from combustible materials, gasoline and other flammable vapours and liquids.
- Never lean over an open grill. When lighting a burner, always pay close attention to what you are doing. Be certain you are pushing the burner knob when you attempt to light the grill.
- When using the grill, do not touch surfaces such as grill burner, grate, or immediate surrounding areas as these become extremely hot and could cause burns.
- Grease is flammable. Never operate the grill without a drip tray. Let hot grease cool before attempting to handle it. Avoid letting grease deposits collect in the drip pan. Clean the grill with caution. Avoid steam burns; do not use a wet sponge or cloth to clean the grill while it is hot. Some cleaners produce noxious fumes or can ignite if applied to a hot surface.

⚠ WARNING!

Hot Surface Hazard

Failure to follow this advice may result in burns and scalds or serious injury.

- Use only dry pot-holders; moist or damp pot-holders on hot surfaces may cause burns from steam. Do not use a towel or bulky cloth in place of pot-holders. Do not let pot-holders touch hot portions of the grill or burner grate.
- To avoid burns when cooking, use long handled BBQ tools.

⚠ WARNING!

Explosion Hazard

Failure to follow this advice may result in injury or death.

- If you smell gas, do not use the appliance.
- Do not use water on grease fires, a violent steam explosion may result. Turn all burners off, then smother fire use dry chemical or foam-type extinguisher.
- Do not heat unopened food containers such as cans – Build up of pressure may cause container to burst and result in injury.
- Leaking LP gas can cause a fire or explosion if ignited causing serious bodily injury or death.
- Contact LP gas supplier for repairs or disposal of the cylinder or unused LP gas.

⚠ WARNING!

Cut Hazard

Failure to use caution could result in injury.

- Take care: some edges are sharp.

⚠ WARNING

Excessive Weight Hazard

Failure to follow this advice may result in injury or death.

- Two or more people are required to move and install this unit.

⚠ WARNING

Electrical Shock Hazard

Failure to follow this advice may result in death or electrical shock.

- This appliance is equipped with a three-prong grounding plug for your protection against shock hazard and should be plugged directly into a properly grounded power outlet.
- Use only a Ground Fault Interrupter (GFI) protected circuit.
- Use only extension cords with a three-prong grounding plug, rated for the power of the equipment, and approved for outdoor use with a W-A marking.
- Do not immerse cord or plugs in water or other liquid.
- Do not under any circumstances cut or remove the grounding prong from this plug.

⚠ WARNING!

Fire Hazard

Failure to follow this advice may result in death or serious injury.

- Do not operate the grill under unprotected combustible construction. Use only in well ventilated areas.
- Cylinders shall be stored outdoors and out of the reach of children.
- Do not store in a building, garage or any other enclosed area.
- An appliance is considered to be outdoors if installed with shelter no more inclusive than within a partial enclosure that includes an overhead cover and three side walls, as long as 30% or more of the periphery of the enclosure is permanently open.
- All openings must be permanently open; sliding doors, garage doors, windows, or screened openings are not considered as permanent openings
- Never leave the grill unattended when in use.
- Never store a spare LP cylinder under or near this unit.
- Never fill the cylinder beyond 80 percent full.
- If the information above is not followed exactly, a fire causing death or serious injury could occur.

SAFETY AND WARNINGS

To reduce the risk of fire, injury to persons or damage when using the appliance, follow the important safety instructions listed below. Read all the guidance before using the appliance. Do not use an outdoor cooking gas appliance for purposes other than intended.

General Use

- When using the appliance, be sure that all parts of the unit are firmly in place and that everything is stable.
- Do not locate, store, or operate the appliance on a slope.
- Do not move the appliance during use. On cart mounted units, never move cart without first allowing the appliance to cool, disconnecting the power cable, and ensuring that the gas supply is turned off.
- Children should not be left alone or unattended in an area where the product is being used. Never allow them to sit, stand or play on or around the unit at any time. When in use, portions of the grill are hot enough to cause severe burns.
- Do not store items of interest to children around or below the appliance.
- Never use the appliance in a windy area.
- Do not obstruct the flow of combustion and ventilation air to the appliance.
- To put out flare-ups, adjust the controls to lower the temperature.
- Clean and perform general maintenance on the appliance regularly and after periods without use. Always turn off gas at the source prior to inspecting.
- Ensure all grill controls are turned off and the grill is cool before using any type of aerosol cleaner on or around the grill. The chemical that produces the spraying action could, in the presence of heat, ignite or cause metal parts to corrode.
- Unplug from the outlet when not in use and before cleaning. Allow to cool before putting on or taking off parts.
- Before each use, inspect the gas supply piping or hose prior to turning the gas “ON”. If there is evidence of cuts, wear, or abrasion, it must be replaced prior to use.
- You must inspect the unit at least once a year. Check immediately if the smell of gas is present or the burner flames appear yellow, the appliance does not reach temperature or heats unevenly, or the unit makes popping noises.
- When refitting each burner after cleaning, correctly center the burner onto the gas jet and ensure it is level before lighting.
- When connecting to a power supply, first connect plug to the appliance, then plug appliance into the outlet.
- Do not try lighting this appliance without reading the lighting instructions in this guide.
- After lighting burners, make sure burners are operating normally. In sunny locations, it may be difficult to see when the rotisserie and sear burners are lit. Use caution.
- The sear burner is designed specifically for searing food. Do not use the griddle plate or charcoal insert over the sear burner or cover it with any utensil type.
- Do not place griddle plates side by side on the grill.
- Do not operate in enclosed areas. This could result in carbon monoxide build-up which could result in injury or death.
- This product must be installed by a licensed plumber or gas fitter when installed within the Commonwealth of Massachusetts.

SAFETY AND WARNINGS

Fire

- Have an ABC rated fire extinguisher accessible – never attempt to extinguish a grease fire with water or other liquids.
- Never leave the product unattended when in use.
- Always remove dust cover and open hood before lighting. Do not replace cover during cooking or before appliance has cooled.
- Do not use a flame to check for gas leaks.
- Do not smoke while leak testing.
- Do not attempt to disconnect any gas connections while your appliance is in use, or the gas supply is on.
- Never connect an unregulated gas line to the appliance.

Electrical Hazards

- Do not operate with a damaged cord or plug, after the appliance malfunctions or after the appliance has been damaged in any manner. Contact the manufacturer for repair.
- Keep any electrical supply cord, the rotisserie motor cord and the fuel supply hose away from the heated areas of the grill, sharp edges and water (pools, fountains, puddles).
- When connecting, first connect plug into the appliance and then plug appliance into the outlet.
- Do not let the cord hang over the edge of a table or touch hot surfaces.

Installation Warnings

- The installation of this appliance must conform with local codes or, in the absence of local codes, with the National Fuel Gas Code, ANSI Z223.1/NFPA 54. Installation in Canada must be in accordance with Natural Gas and Propane Installation Code, CSA B149.1, and/or Propane Storage and Handling Code, B149.2 and local codes.
- This appliance must be electrically grounded in accordance with local codes, or in the absence of local codes, with NFPA 70 or the Canadian Electrical Code, Part I.
- This appliance must only be used outdoors and must not be used in a building, garage or any other enclosed area.
- An appliance is considered to be outdoors if installed with shelter no more inclusive than within a partial enclosure that includes an overhead cover and three sidewalls, as long as 30% or more of the horizontal periphery of the enclosure is permanently open. All openings must be permanently open; sliding doors, garage doors, windows, or screened openings are not considered as permanent openings.
- If installed under overhead combustible construction, the appliance must be installed in conjunction with a suitable UL 710- or ULC S646-approved heavy duty vent hood only. The vent hood must be placed in operation when the appliance is in use.
- All gas connections, installations and leak testing should be made by a qualified technician.
- Installation must comply with clearances to combustible materials as noted in the Planning Guide.
- Do not attempt to remove, repair, or replace the regulator/hose assembly. This must be done by a qualified licensed technician only. The grill system arrives leak tested.
- If the connections are not perfectly sealed, you can have a small leak and therefore a faint gas smell. Some leaks can only be found with the burner control in the “ON” position - this must be done by a qualified technician.
- Keep the ventilation openings of the cylinder enclosure free and clear from debris.
- This outdoor cooking gas appliance is not intended to be installed in or on recreational vehicles, trailers and/or boats.

Gas Requirements

- Do not change the regulator/hose assembly from that supplied with the unit or attempt to use a Type 1 equipped regulator/hose assembly with a standard 510 POL cylinder/ valve assembly.
- The cylinder pressure relief valve outlet must point away from the user when in use.
- An installer-supplied gas shut-off valve must be installed in an easily accessible location.
- All installer supplied parts must conform to local codes, or in the absence of local codes, with the National Electrical Code, ANSI/NFPA 70 or the Canadian Electrical Code, CSA C22.1, and the National Fuel Gas Code, ANSI Z223.1 or CSA-B149.1 Natural Gas Installation Code or CSA-B149.2 Propane Installation Code.
- In Massachusetts such shut-off valves should be approved by the Board of State Examiners or Plumbers & Gas Fitters.
- All pipe sealants must be an approved type and resistant to the actions of LP gases. Never use pipe sealant on flare fittings.
- A dented or rusty LP cylinder may be hazardous and should be checked by your LP supplier.
- Always check for leaks after every LP cylinder change. Check with a full cylinder.
- Do not use the appliance until all connections have been checked and do not leak.
- Before each use, inspect the gas supply piping or hose prior to turning the gas ON. If there is evidence of cuts, wear, or abrasion, it must be replaced prior to use.
- The pressure regulator and hose assembly supplied with the appliance must be used. If replacements are needed, contact Customer Care.

Storage and maintenance

- Ensure the gas supply is turned off at the supply cylinder when not in use.
- Keep appliance covered when not in use.
- Storage of the appliance indoors is permissible only if the cylinder is disconnected and removed from the unit.
- Cylinders must be stored outdoors, out of reach of children and must not be stored in a building, garage, or any other enclosed area.
- After a period of storage or non-use, the appliance should be checked for gas leaks, deterioration, proper assembly, and burner obstructions before use.
- Keep the outdoor gas appliance area clear and free from combustible materials, gasoline, and other flammable vapours and liquids.
- Clean the outdoor gas appliance, including special surfaces with recommended cleaning agents and check burner/venturi tubes for insects and insect nests. A clogged tube can lead to a fire beneath the grill.

LP Cylinder Cabinet Requirements

For a cylinder enclosure having four sides, a top and a bottom, and intended for installation in a built-in enclosure:

- At least one ventilation opening shall be provided on the exposed exterior side of the enclosure located within 5" (127mm) of the top of the enclosure and unobstructed. The opening(s) shall have a total free area of not less than $1"^2$/lb ($14.2cm^2$/kg) of stored fuel capacity.
- At least one ventilation opening shall be provided on the exposed exterior side of the enclosure 1" (25.4mm) or less from the floor level and shall have a total free area of not less than $1/2"^2$/lb ($7.1cm^2$/kg) of stored fuel capacity. The upper edge shall be no more than 5" (127mm) above the floor level.
- Every opening shall have a minimum dimension so as to permit the entrance of a 3/16" (4.8mm) rod.

LP Cylinder Hazards

- Installation must conform with local codes or with the National Fuel Gas Code ANSI Z223.1 or the CSA-B149.2 Propane Installation Code.
- This appliance can be used with any brand of 20 lb LP gas cylinder provided it is compatible with a proper retention device (not supplied for built-in installations).
- The LP gas cylinder must be:
  - Designed for use with a Type 1 system only.
  - Constructed and marked in accordance with the Specifications for LP gas Cylinders of the U.S. Department of Transportation (D.O.T.) or the Standard for Cylinders, Spheres and Tubes for Transportation of Dangerous Goods and Commission, CAN/CSA-B339.
  - Provided with a listed overfilling prevention device.
  - Provided with a cylinder connection device compatible with the connection for outdoor cooking gas appliances.
- The cylinder must be provided with a shut-off valve terminating in an LP gas supply cylinder valve outlet specified, as applicable, for connection Type 1.
- Do not store a full cylinder in direct sunlight.
- Never use a cylinder with a damaged valve. Always check for leaks after every combustible gas cylinder change.
- The cylinder that is used must have a collar to protect the cylinder valve.
- If you intend to operate your built-in grill on LP gas utilizing a 20 lb Type 1 cylinder, an installer supplied built-in LP cylinder restraint must be installed prior to initial use of the grill.
- Gas piping and connectors must be clamped within the enclosure to avoid contact with moving parts and hot surfaces. Where the gas piping passes through an opening in the enclosure, the piping must be protected for a distance of at least 2” (50 mm) either side of the opening.
- Connection: LP gas hose with a Type 1 quick disconnect and regulator is included.
- Operating pressure: 11.0” W.C.
- All gas piping and connectors must conform to the Standard for Connectors for Outdoor Gas Appliances and Manufactured Homes, ANSI Z21.75/CSA 6.27.
- If the appliance is stored indoors, the cylinder must be disconnected and removed from the appliance.
- Grills orificed for use with combustible gas come equipped with a high-capacity hose/regulator assembly for connection to a standard 20 lb. combustible gas cylinder (Type 1). The combustible gas cylinder is not included.
- Do not use the grill until all connections have been checked and do not leak.
- If you own or use a spare cylinder, or have a disconnected cylinder, you should NEVER store it near or under the grill unit or heat box, or near any other ignition or heat source.
- Never fill the cylinder beyond 80% full.
- If the information above is not followed exactly, a fire causing death or serious injury could occur.

INSTALLATION REQUIREMENTS FOR NATURAL GAS

Natural gas Installation and connection

- Check with your local gas utility company or local codes for instructions on installing gas supply lines. Be sure to check on type and size of run, and how deep to bury the line. If the gas line is too small, the grill will not function properly. Any joint or pipe sealant used must be an approved type and be resistive to the actions of combustible gases.
- Ensure that the regulator arrow points in the direction of gas flow away from the gas supply.
- The appliance and its individual shut-off valve must be disconnected from the gas supply piping system during any pressure testing of that system at test pressures in excess of 1.2 psi (3.5 kPa).
- The appliance must be isolated from the gas supply piping system by closing its individual manual shut-off valve during any pressure testing of the gas supply piping system at test pressures equal to or less than 1/2 psi (3.5 kPa).
- An installer-supplied gas shut-off valve must be installed in an easily accessible location.
- Use threading compound on male threads only.
- Never use pipe sealant on flare fittings.
- In Massachusetts such shut-off valves must be approved by the Board of State Examiners or Plumbers & Gas Fitters.
- All piping and hoses are to run away from the product and never against the product surfaces.
- Natural Gas: Operating pressure: 4.0” W.C. Supply Pressure 5" to 14" W.C. If in excess of 14", a stepdown regulator supplied by installer is required.
- All gas piping and connectors must conform to the Standard for Connectors for Outdoor Gas Appliances and Manufactured Homes, ANSI Z21.75/CSA 6.27.

Total gas consumption of the grill with all burners on HI - Input rates BTU/hr

MODEL	BE1-36RCI	BE1-48RCI	BE1-36RC	BE1-48RC	BE1-36C	BE1-48C
MAXIMUM	88000	117000	89000	118000	75000	100000
GRILL	25000	25000	25000	25000	25000	25000
ROTISSERIE	14000	18000	14000	18000	N/A	N/A
SEAR	24000	24000	N/A	N/A	N/A	N/A

Servicing

- Do not repair or replace any part of the appliance unless specifically recommended in this guide. All other servicing should be undertaken by an authorized technician or qualified person.
- Only use the product with the type of gas specified on the rating plate. To change gas type, a factory conversion kit is required.

PRODUCT OVERVIEW

Features and accessories

1 Secondary cooking tray

2 Secondary cooking racks

3 Sear burner*

4 Grill burners

5 Charcoal insert

6 Control panel

7 Drip tray and removable insert

8 Temperature gauge

9 Hood lights

!0 Rotisserie rod*

!1 Rotisserie burner*

!2 Rotisserie light*

!3 Rotisserie motor*

!4 Rotisserie rod storage (below drip tray)*

*Some models only

CONTROL PANEL

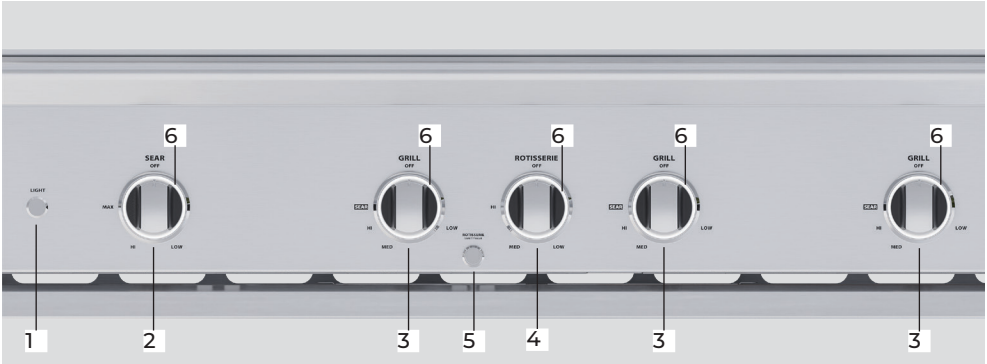

Control panel		
1	Light button	Press to turn hood lights ON/OFF. Also activates dial lights.
2	Sear burner dial*	Use to ignite sear burner and select heat setting.
3	Grill burner dials	Use to ignite grill burners and select heat settings.
4	Rotisserie dial*	Use with rotisserie safety valve to ignite rotisserie burner and to select heat setting.
5	Rotisserie safety valve	Allows safe gas flow to rotisserie burner while lighting. Use with rotisserie burner dial to ignite rotisserie burner.
6	Dial lights	The dial lights glow white when the hood lights are on or another burner is in use, and orange when a burner is in use and gas is flowing.

*Some models only

PLANNING YOUR COOK

Before using the grill, plan what you want to cook and how you want to cook it.

The grill design allows you to tailor your cook with different cooking methods, areas and grate types. For optimal results, take advantage of the entire grill to move food between high and low heat zones at different stages of the cook.

Direct grilling

Food is cooked on grates directly over lit burners.

Use this method for food that takes less than 20 minutes to cook or for searing larger items before indirect cooking or further grilling at a lower heat setting.

Indirect cooking

Food is cooked on grates beside the heat source, or in secondary cooking area, with hood closed to maintain heat.

Use for food that takes longer than 20 minutes to cook such as bread or thicker pieces of meat.

Sear burner (some models only)

Delivers intense, even heat that builds flavor and texture. Use only with the sear burner grate to create perfect sear lines and surface browning.

Sear meat at a high heat, then move to a lower heat zone before resting to achieve required doneness. Switch order for reverse-sear method. See 'Using the sear burner.'

PLANNING YOUR COOK

Grill burners

Deliver a range of heat intensities. Choose cooking zones and heat settings to cook a variety of foods using direct or indirect heat.

Use with radiant trays and double-sided grates to cook and brown food. See 'Using the grates.' Use with the charcoal insert and grate to grill and add smoky flavor to food. See 'Using the charcoal insert.'

Secondary racks and trays

Use for indirect cooking like slow cooking, baking, warming, short-time smoking or roasting. Can hold up to 20 lb.

Rearrange or remove as needed. Tray can be also be used to collect food juices or as a water tray to keep food moist during indirect cooking and smoking.

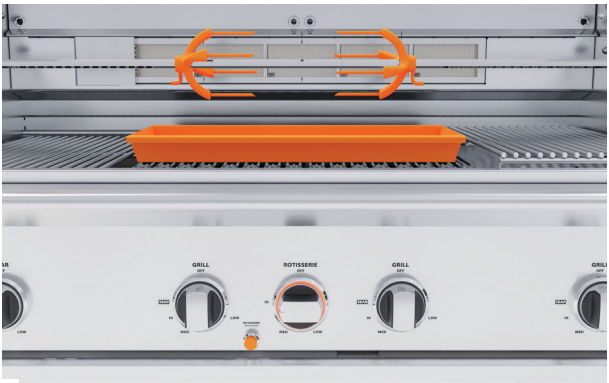

Rotisserie (some models only)

Use the rotisserie to slowly cook food. Intense, even heat gives roasts a crust. See 'Using the rotisserie.'

SETTING UP THE GRILL

Before you begin

- Inspect the gas piping or hose for signs of cuts, wear or abrasion before each use. Replace any damaged parts before using the grill.
- Season the grates. See 'Using the grates.'

1. Ensure all dials are turned off, then lift the grill hood.

2. Position the grates, tray and racks according to your cooking plan. If using the rotisserie, set this up first. See 'Using the rotisserie.'

3. Pull drip tray out to check insert is clean and in place before pushing tray back in.

Turn on the power and the main gas supply.

USING THE GRILL

Preheating the grill

Preheat each zone according to the heat settings you plan to cook at. There will be minimal heat bleed from high heat to low heat zones.

Use high heat for searing and browning, and medium, low or indirect heat to cook food through without burning.

Lighting the grill

1. Light one burner at a time. Push and hold burner dial for 2 seconds. While still pushing, turn dial to SEAR to ignite.

You will hear the burner ignite, but ignitor will not make a clicking sound. Once lit, turn dial to desired heat and release.

If burners do not light, wait 5 minutes for gas to dissipate, then start again or light manually.

2. Light remaining burners, and select heat setting. Close hood and leave grill to preheat for 10 minutes, or longer if preheating to low-heat setting.

If not using all burners, preheat planned burners and any adjacent burner at desired heat for 10 minutes.

Manual lighting

Turn dial to SEAR. At the same time, hold a lit match or lighter slightly below the opening on the right-hand side of grill.

When burner ignites, turn dial to desired heat setting and release it. Remaining grill burners will cross light.

Do not use lighter fluid.

USING THE SEAR BURNER (SOME MODELS ONLY)

1. Make sure the sear burner grate is secured in the hooks at the back of the grill, with its legs on the ledge at the front.

2. Push and hold sear burner dial for 2 seconds, then set to MAX. Light adjacent burner and set to SEAR. Light and set remaining burners as desired.

Preheat for 10 minutes with hood down. Preheat for 5 minutes if sear burner is already warm.

If burner does not light, wait 5 minutes for gas to dissipate, then start again or light manually.

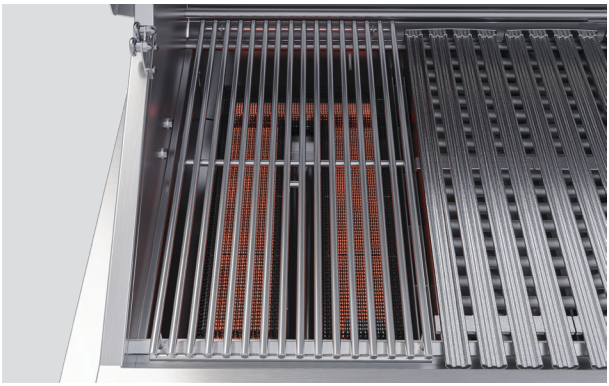

3. Once burner is preheated, place food on the grate. If only using sear burner, turn off adjacent burner after preheat.

The sear burner produces intense heat. We recommend keeping a close eye on food and turning it frequently. Adjust heat setting if required.

USING THE SEAR BURNER (SOME MODELS ONLY)

4. Once browned, move the food to another area of the grill to finish cooking, if required. Turn sear burner dial to OFF.

Manual lighting

Turn dial to allow gas to flow. At the same time, hold a long match or lighter to the side of the sear burner, in the gap between grates.

When burner ignites, turn dial to desired heat setting, and release it.

USING THE GRATES

Seasoning the grates

Season all grates before use to protect surface from corrosion and to stop food sticking. Repeat after cleaning or after long periods without use.

1. Apply a light coating of high-heat cooking oil to all grates, then heat on MAX/SEAR with the hood down. See 'Lighting the grill'.

2. Turn the dials OFF after 15 minutes, or when grates begin to smoke. Allow to cool.

Grates will change color. This is normal.

Sear burner grate

Designed for fast, even searing and clean sear lines.

Fits flat over sear burner.

Shorter front legs than charcoal insert grate. Rests on hooks at rear of grill.

USING THE GRATES

Double-sided grates

Use W-shaped side to create sear lines on food and channel grease away from flame. Use the radius side to support and cook delicate food items like scallops and salmon.

Double-sided grates

Fit over grill burners and radiant trays. Can be placed flat or at an angle, with W-shaped side or radius side facing up.

Rest grates on low bar to sit flat or high bar to sit at an angle. When angled, W-shaped side channels more grease towards drip tray.

Charcoal insert grate

For direct grilling or to infuse smoky flavour in food.

Fits flat over charcoal insert, with or without the lid.

Longer front legs than sear burner grate. Rests on high bar at rear of grill.

USING THE CHARCOAL INSERT

The insert is for direct grilling, short-time smoking and indirect cooking. Use charcoal or briquettes to grill and cook, and wood chips or wood chunks to smoke.

Do not use the charcoal insert or its grate over the sear burner. If using two charcoal inserts, keep a grill burner space between them to maintain air flow.

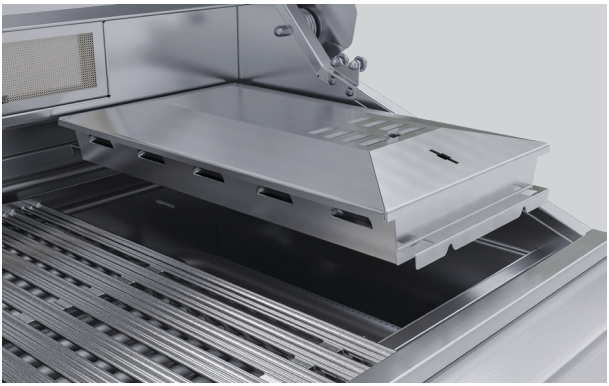

1. Fill the insert, taking care not to overfill.

Remove grates and radiant tray. Place the insert onto the front and rear pins where the radiant tray was located.

2. Push and hold dial for 2 seconds, then set to SEAR. Release when the burner ignites.

Do not use lighter fluid, matches or a butane lighter.

3. Turn the dial to OFF when there is enough smoke, when charcoal turns gray at the edges or after 8 – 10 minutes.

The fuel will continue to burn and smoke.

USING THE CHARCOAL INSERT

Direct grilling

Use the charcoal insert grate over the charcoal insert without the lid in place. Place food onto grate to cook.

Short-time smoking and indirect cooking

Place the lid on the charcoal insert and adjust the vent as desired to control smoke. Place food away from charcoal to cook.

Put a tray of water in the grill and close hood. This moistens food surface so smoke sticks to it.

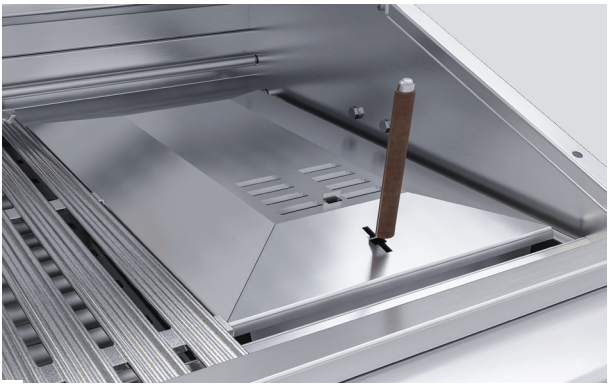

Adjusting the charcoal insert

Use the multi-tool to move the grate and adjust the lid or vent, as the insert will be hot. Close vent slightly to decrease heat and open it to increase heat.

USING THE ROTISSERIE (SOME MODELS ONLY)

The rotisserie delivers intense and even heat to food to achieve a crust on roasts or to slowly cook large food items up to 50 lb.

Do not ignite the grill burners while the rotisserie burner is lit. Avoid using the rotisserie in windy conditions.

Tying meat and poultry

Use butcher string or dental floss to tie meat and poultry before putting them on the rotisserie rod.

We recommend selecting a roast that is a consistent size and tying it in three areas to ensure even cooking. For poultry, tie the wings and legs to the body to secure them while the rotisserie is turning.

Preparing the rotisserie rod

1. Remove the racks and tray from the secondary cooking area.

2. Remove the rotisserie rod from its storage under the drip tray handle.

USING THE ROTISSERIE (SOME MODELS ONLY)

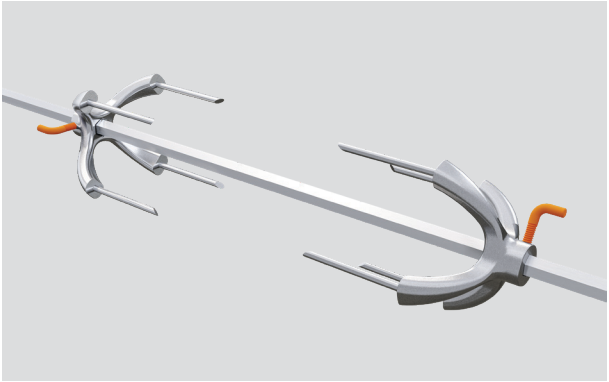

3. Slide first fork onto rotisserie rod far enough to allow food to be centered. Turn the L-shaped screw to secure it.

Slide food and second fork onto rod, with fork tines offset. Turn screw to secure.

Forks are sharp. Take care when handling.

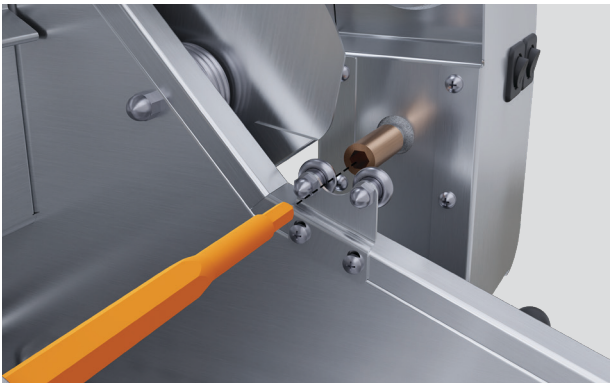

4. Insert sharp end of rod into rotisserie motor. Rest other end on rollers at opposite side of grill.

Rod does not rest on rollers next to motor.

5. Place secondary cooking tray beneath food to collect drips. Switch on rotisserie motor.

If required, switch off to adjust food for balance and remove grates to create more space between food and tray.

USING THE ROTISSERIE (SOME MODELS ONLY)

Lighting the rotisserie

Push and hold rotisserie burner dial for 2 seconds, then turn to HI and press and hold the safety valve button for 10 seconds or until burner remains lit.

Once lit, turn dial to desired heat setting and release.

Manual lighting

Hold lighter to the side of the burner, then turn dial to HI. Release the dial, and press and hold the safety valve button for 10 seconds or until burner ignites. Turn dial to desired heat.

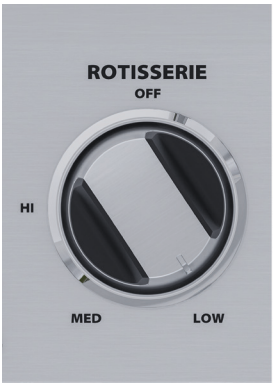

Checking food temperature

Turn dial to LOW, switch off motor, and use a meat thermometer. If further cooking is required, turn dial to desired heat and restart motor.

When food is cooked, turn dial to OFF, and switch off motor. Remove rod, place food on a tray, then remove forks. Take care, as rod will be hot.

Cover and allow to rest.

USING THE MULTI-TOOL

Use the multi-tool to lift and move grates, lift the charcoal burner lid, and adjust the charcoal burner lid vent. You can also use it to scrape grease into the drip tray and to scrape out the bottom of the charcoal insert after use.

Adjusting grates

Allow grates to cool, then insert flat edge of multi-tool in middle slot of grate, in front of center divider. Rotate 90° so tool is straight and other end fits in slot. Lift or reposition the grate.

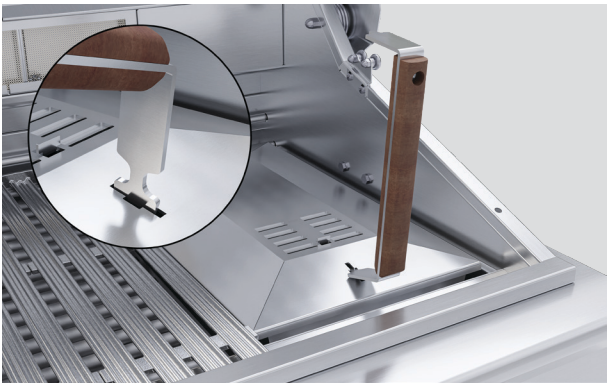

Adjusting charcoal insert lid

Insert the flat edge of the multi-tool into the slot on the lid of the charcoal insert, and rotate 90° so the tool is vertical.

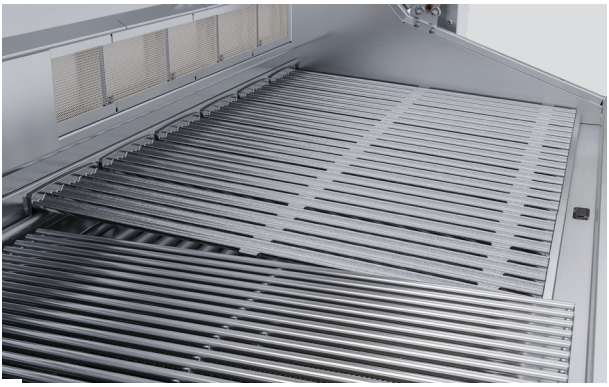

Clearing grease

Use flat edge of multi-tool to scrape grease into opening at front of grill. Grease will collect in drip tray.

ACCESSORIES

USA

For a complete list of accessories, scan the QR code or visit dcsappliances.com/us/accessories.

Canada

For a complete list of accessories, scan the QR code or visit dcsappliances.com/ca/accessories.

CLEANING

General

Clean your grill regularly to maintain performance.

Stainless steel surfaces

Clean regularly with mild detergent, kitchen spray or stainless steel cleaner to maintain condition, especially if located near a pool or the coast. Cover when not in use.

Secondary racks and tray

Once cool, remove from grill. Clean with hot water and mild detergent or in dishwasher.

Multi-tool

Wash with hot water and mild detergent after each use, then dry. Store out of direct sunlight.

Grates

While still hot and on grill, brush residue off with a grill brush. When cold, clean with hot water and mild detergent, then dry with a soft, clean cloth. Re-season grates after cleaning to prevent rust.

Drip tray

Allow to cool. Clean after each use to prevent grease build-up. Insert is dishwasher safe.

Rotisserie rod and forks

Clean with hot water and mild detergent, and dry with a soft, clean cloth. Take care when handling forks, as they are sharp.

Charcoal insert

Do not touch or move the insert while hot. Use multi-tool to scrape off food residue and a brush to clean the bottom of the insert. Dispose of the ash in a fireproof container.

Grease Management System

Allow grease to set, then use multi-tool to scrape grease out. Wipe as needed.

Radiant trays

Rotate ceramic rods so they burn clean when next used. If required, use a brush to remove residue, or clean with hot water and mild detergent. For heavy soiling, heat radiant tray on HI for 10–20 mins. Trays may smoke. This is normal. Do not take trays apart.

Rotisserie burner

Run the rotisserie burner for 10–20 minutes to burn off any residue. Do not use water.

Lights

Wipe clean with a soft cloth. If required, remove covers and clean with warm water and mild detergent.

CLEANING THE GRILL BURNERS

Grill burners should be removed regularly for cleaning and to check for blockages from food residue and insects. Always turn off gas supply before removing and cleaning burners.

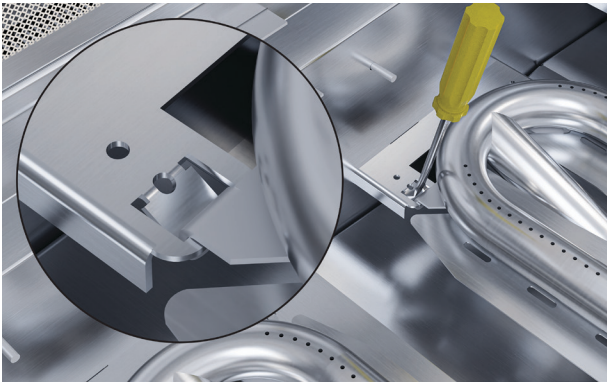

1. Remove grates and radiant trays. Use a flathead screwdriver to loosen clamps, then carefully lift burner up and out of grill.

Shake gently to remove debris. Clean exterior with a grill brush.

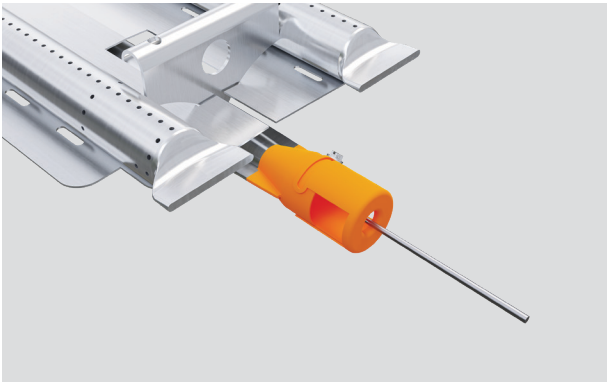

2. Use a flashlight to check if the burner inlet is blocked. If so, use a safety pin or straightened paper clip to unblock the inlet and the holes along the burner tube.

You can also unblock the gas jet inside the front of the grill if required.

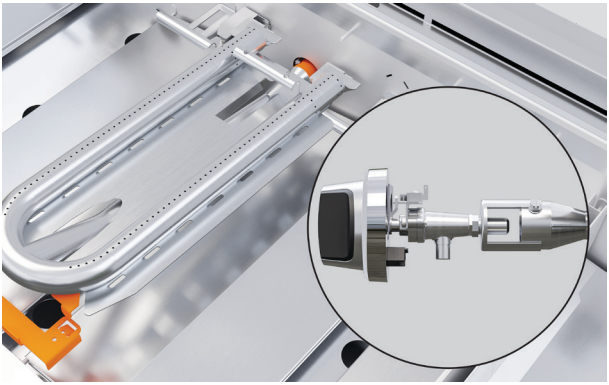

3. Refit burner so the inlet is centered on the gas jet, then lower burner onto mounts at rear. Ensure it is level and secure.

Take care not to damage ignitor.

Burners must be properly located to ensure safe operation.

CLEANING THE SEAR BURNER

Run the sear burner for 10–20 minutes, then allow to cool. The sear burner is self-cleaning, but it can be removed for further cleaning if required. Do not use water as it can damage the sear burner and affect its performance. Always turn off gas supply before removing and cleaning burners.

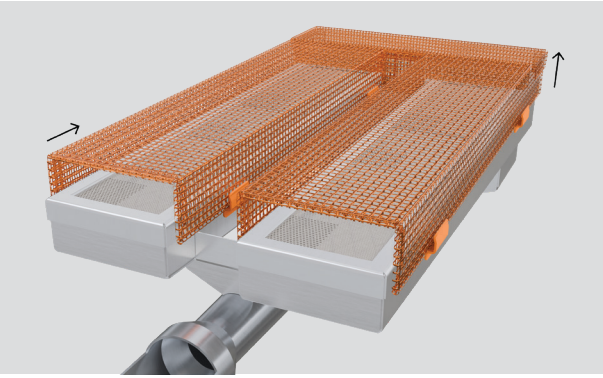

1. Unclip and remove mesh cover from sear burner. Brush or vacuum the mesh separately to remove any residue.

If required, rinse the mesh in warm water and dry thoroughly.

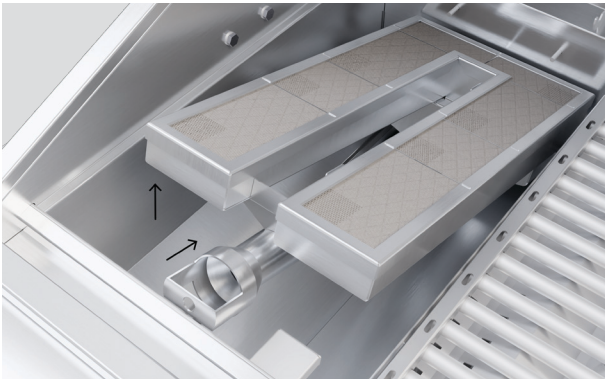

2. Hold burner at the sides and lift at the back to remove it from its mount.

Slide it towards rear of grill to separate it from the opening in the front of the grill, then lift burner to remove.

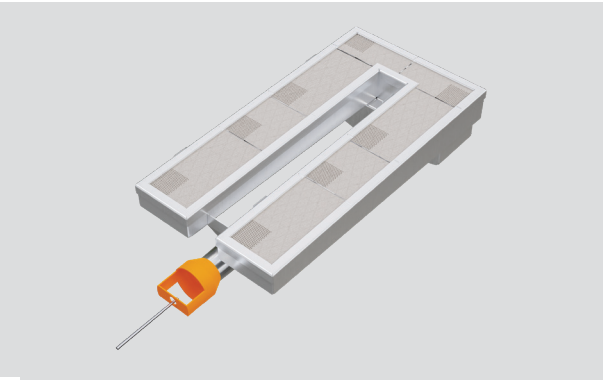

3. Check the burner inlet for blockages. Use a safety pin or paper clip to unblock it.

Gently shake or vacuum the burner to remove debris. Do not use a brush. Do not use water.

CLEANING THE SEAR BURNER

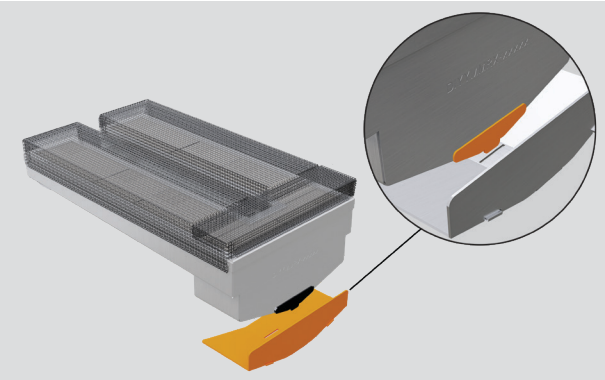

4. Hold sear burner at the sides and fit burner inlet back into opening at front of grill. Ensure it is aligned correctly on the valve inside the opening.

Lower at rear to refit it securely on mount. Refit mesh.

Burner must be properly located to ensure safe operation.

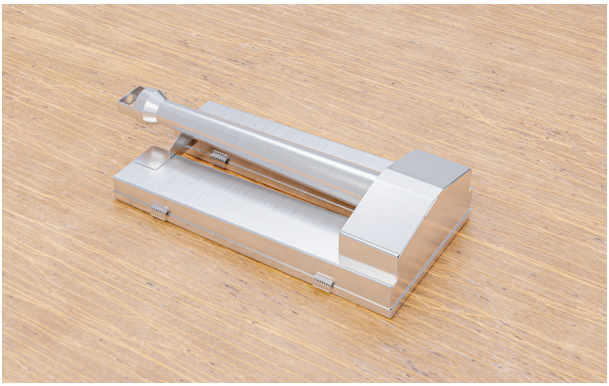

If sear burner gets wet

Remove the burner. Rest it upside down to allow water to drain.

Allow burner to dry completely before reinstalling and using.

LEAK TESTING

Do not smoke while leak testing, and extinguish all open flames. Check with a full cylinder and make sure all dials are OFF.

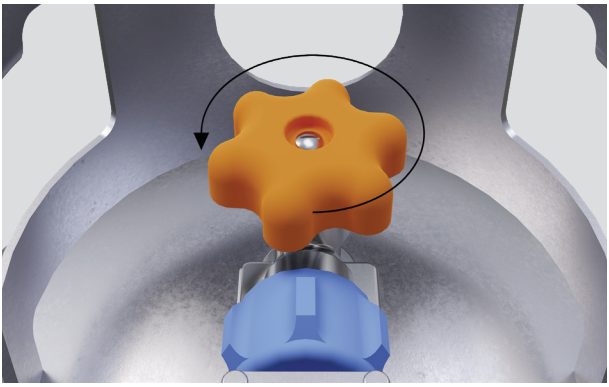

1. Open the gas cylinder valve.

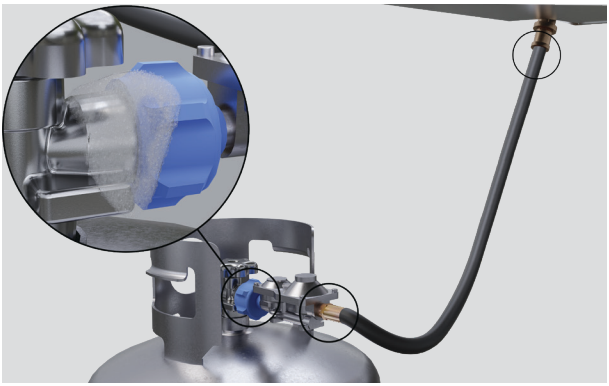

2. Apply soapy water to all connections, hoses and fittings from the cylinder to the connection at the grill.

Soap bubbles will appear where gas is escaping.

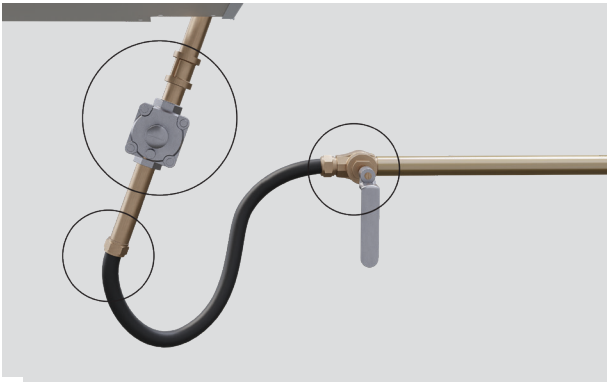

3. If leaking, turn gas off, tighten leaking connections and recheck.

If still leaking, turn gas off, and call your local gas utility or the dealer where you purchased the grill.

CHANGING THE GAS CYLINDER

Inspect the gas connection hose every time you change the gas cylinder. Replace hose if there are any signs of damage.

1. Before connecting new cylinder, check the rubber O-ring. If O-ring is damaged, return it to gas supplier.

Do not use damaged cylinder.

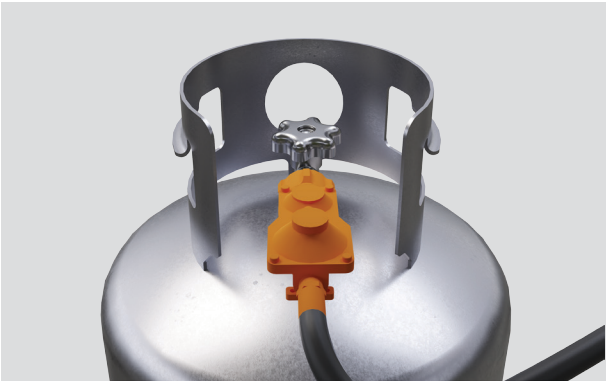

2. If O-ring is in good condition, connect the grill regulator to the gas cylinder valve and turn gas on. Check for leaks. See 'Leak testing.'

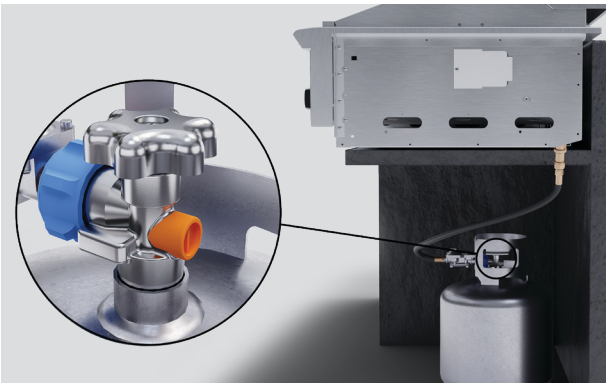

3. If there is no leak, place the cylinder into the grill cabinet with the pressure relief valve facing away from you.

Always close the cylinder valve after each use.

REPLACING THE LIGHTS

Replacing hood lights

Turn power off at outlet, and allow grill to cool.

Use a screwdriver to unclip and remove light cover. Use a cloth to protect bulb from fingers, and pull bulb to remove. Replace with new bulb.

The grill uses G4 - 12v, 10W max halogen bulbs with a bi-pin base.

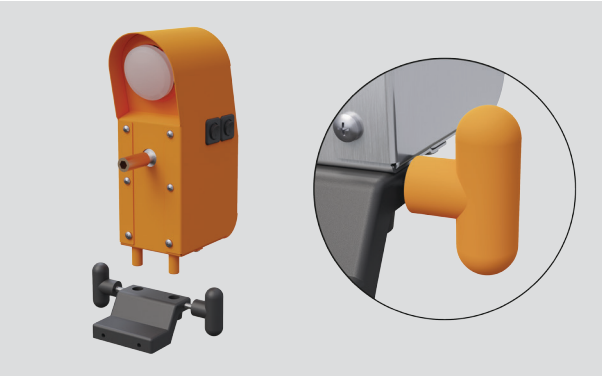

Replacing rotisserie light

1. Unplug rotisserie motor from power supply. Loosen handles, and lift motor off grill.

2. Unscrew and replace light bulb. The rotisserie uses a 50W (or its equivalent) Max. Halogen Narrow bulb.

Refit motor to grill, tighten lugs and reconnect the power supply.

RESETTING FLOW LIMITING DEVICE

The flow limiting device on the gas cylinder may activate if the cylinder gets cold or is low on gas. This can affect gas flow and heat output and will need to be reset.

1. Turn all burner dials to OFF.

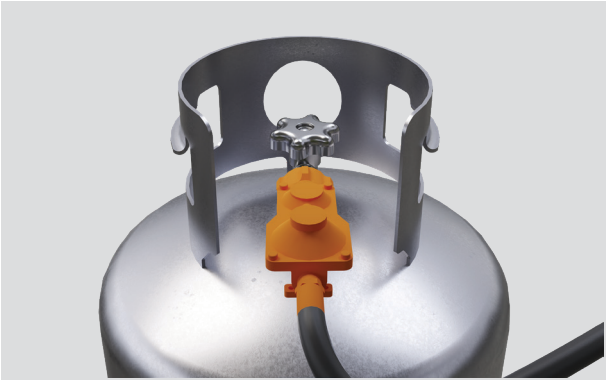

2. Disconnect regulator hose from the gas cylinder.

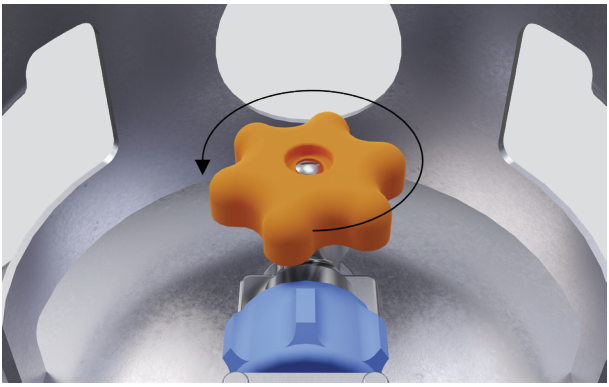

3. Reconnect regulator hose. Turn gas on with at least two full turns, and check for leaks. See 'Leak testing.'

TROUBLESHOOTING

Why is the burner flame yellow/orange?

Burner needs to be adjusted. See Install Guide.

Why won't the grill light when I push the dial?

- Dial not held in when attempting to light grill. Push and hold for 2 seconds before turning to SEAR/MAX . See 'Using the grill.'
- Gas supply is turned off. Turn gas on.
- Power supply is off. Check that the grill is connected to a live power source, and check power supply fuse. Replace if blown.
- Ground Fault Interrupter (GFI) has tripped. Check GFI and reset.
- Burner inlet or tube may be blocked. Remove burner and check for blockages. See 'Cleaning the grill burners' or 'Cleaning the sear burner.' If problem persists, call Customer Care or your Authorized Service Center.
- Ignitor has failed. Call Customer Care or your Authorized Service Center.

Why does the grill keep having flare-ups?

- Radiant trays have grease on them. Wait for trays to cool, then rotate ceramic rods and heat on HI for 10–20 minutes. See 'Cleaning.'
- Sear burner has grease on it. See 'Cleaning the sear burner.'
- Rotisserie burner has grease on it. See 'Cleaning.'

Why can I smell gas?

- Burner dial is on but burner is not lit. Check the dial is turned to OFF. Wait 5 minutes before relighting. See 'Using the grill.'
- Gas is leaking. See 'Leak testing.'

Why isn't grill getting hot on HI/SEAR?

- Grill hasn't preheated enough. Preheat for full 10 minutes before cooking.
- Grill is being affected by wind gusts. Move to a more sheltered area if possible.
- LP gas cylinder is empty. Check gas cylinder, and refill if empty.
- A burner port is obstructed. See 'Cleaning the grill burners.' or 'Cleaning the sear burner.'
- Flow Limiting Device is activated on LP cylinder. See 'Resetting flow limiting device.'

Why is there smoke coming from the grill?

Residue or grease on the grates or radiant trays. Brush residue off the grates with a grill brush. Residue on radiant trays should burn off during the cook. See 'Cleaning.'

Why isn't the rotisserie staying lit when I release the safety valve button?

Releasing button too soon. Keep pressing the safety valve button until the rotisserie burner stays lit.

Why isn't the rotisserie rotating? (some models only)

- Motor is off. Check that motor is switched on and plugged into a GFI outlet. Reset if tripped.
- Rod not inserted correctly. Check the rod is inserted correctly in the motor and balanced on the rollers at the side of grill. See 'Using the rotisserie'.
- Something is blocking it. Check that trays and racks are not preventing rotisserie from turning. Check food is tied correctly and is centered and balanced on the rod. If not, switch motor off and turn burner to LOW while you readjust the food.

Why aren't the hood lights or rotisserie light working? (some models only)

- Bulb has blown. Replace bulb. See 'Replacing the lights.'
- No power. Check the power supply is on. Check power supply fuse, and replace if blown. If problem persists, call Customer Care or your Authorized Service Center.

Why aren't the dial lights working?

- No power. Check the power supply is on. Check power supply fuse. Replace if blown. If problem persists, call Customer Care or your Authorized Service Center.

CUSTOMER CARE

Before you call for service or assistance

Check the things you can do yourself. Refer to the installation instructions and your user guide and check that:

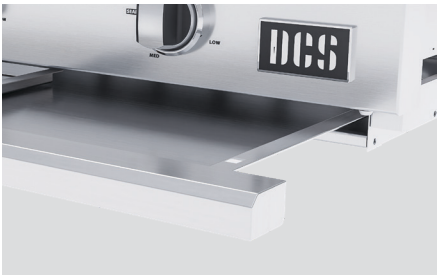

1 Your product is correctly installed.
2 You are familiar with its normal operation.
3 Model number (can be found on the inside, right side panel behind the drip tray handle).
4 Serial number (can be found on the inside, right side panel behind the drip tray handle).
5 Code (can be found on the inside, right side panel behind the drip pan handle).
6 Date of installation.

If you still need assistance or parts, please refer to the Service & Warranty book for warranty details and your nearest Authorized Service Center, Customer Care, or contact us through our website www.dcsappliances.com or email: customer.care@fisherpaykel.com.

Complete and keep for safe reference:

Model _____

Serial No. _____

Purchase Date _____

Purchaser _____

Dealer _____

City _____

State _____

Zip _____

Country _____

DCSAPPLIANCES.COM

© Fisher & Paykel Appliances 2024. All rights reserved.
Fisher & Paykel Appliances, 695 Town Center Drive
Suite 180, Costa Mesa, CA 92626, USA

The models shown in this guide may not be available in all markets and are subject to change at any time.

The product specifications in this guide apply to the specific products and models described at the date of issue. Under our policy of continuous product improvement, these specifications may change at any time.

For current details about model and specification availability in your country, please go to our website or contact your local DCS dealer.