OUTDOOR GRILL

BE1-30 Models

INSTALLATION GUIDE

US CA

⚠ DANGER

IF YOU SMELL GAS

- **Shut off gas to the appliance.**
- **Extinguish any open flame.**
- **Open lid.**
- **If odor continues, keep away from the appliance and immediately call your gas supplier or your fire department.**

⚠ WARNING

- **Do not store or use gasoline or other flammable liquids or vapors in the vicinity of this or any other appliance.**
- **An LP cylinder not connected for use must not be stored in the vicinity of this or any other appliance.**

⚠ WARNING!

Electric Shock Hazard

Failure to follow this advice may result in electric shock or death.

- This appliance is equipped with a three-prong or four-prong grounding plug for your protection against shock hazard and should be plugged directly into a properly grounded power outlet.
- Never remove the grounding plug or use with a 2 prong adapter.
- Use only extension cords with a 3 prong grounding plug, rated for the power of the equipment, and approved for outdoor use with a W-A marking.
- Do not immerse cord or plugs in water or other liquid.

⚠ WARNING!

Fire Hazard

Failure to follow this advice may result in a fire causing death or serious injury.

- This unit is for outdoor use only. Do not operate under unprotected combustible construction. Do not use in buildings, garages, sheds, breezeways, covered structures or other such enclosed areas.
- Never store a spare LP cylinder under or near this unit. Do not fill the gas tank more than 80% of its total capacity .
- Do not use aluminium foil to line drip pans, grates or radiant trays. This can interfere with combustion, air flow or trap excessive heat in the control area. The result of this can be melted dials or damaged ignition components.

⚠ WARNING!

Hot Surface Hazard

Failure to follow this advice may result in fire, burns, scalds or personal injury.

- Accessible parts may become hot during use.
- When in use, do not touch the burner, grate, or immediate surrounding area as these areas become extremely hot. Clean the with caution.
- Never let clothing or other flammable materials come in contact with or get too close to any grate, burner or hot surface until it has cooled.
- Never lean over an open unit. When lighting a burner, always pay close attention to what you are doing. Be certain you are pushing the burner dial when you attempt to light.
- Never operate the unit without a drip tray. Let hot grease cool before attempting to handle it. Avoid letting grease deposits collect in the drip pan.
- Ensure all controls are turned off and the unit is cool before using any type of aerosol cleaner on or around the product. The chemical that produces the spraying action could, in the presence of heat, ignite or cause metal to corrode
- Keep any electrical supply cord and the fuel supply hose away from any heated surfaces.

⚠ WARNING!

Excessive weight Hazard

Failure to follow this advice may result in personal injury.

- Two or more people are required to move and install this unit.

⚠ WARNING!

Explosion Hazard

Failure to follow this advice may result in injury or death

- If you smell gas, do not use the appliance.
- Do not use water on grease fires, a violent steam explosion may result. Turn all burners off, then smother fire or flame or use dry chemical or foam-type extinguisher.
- Do not heat unopened food containers such as cans – build up of pressure may cause container to burst and result in injury.

WARNING!

To reduce the risk of fire, injury to persons or damage when using the appliance, follow the important safety instructions listed below. Read all the guidance before using the appliance. Do not use an outdoor cooking gas appliance for purposes other than intended.

Servicing

- Do not repair or replace any part of the appliance unless specifically recommended in the user guide. All other servicing should be undertaken be a Fisher & Paykel trained and supported service technician or qualified person.
- Only use the product with the type of gas specified on the rating plate. To change gas type a factory conversion kit is required.

Fire Hazard

- Use only in well ventilated areas.
- Never leave the product unattended when in use.
- Always remove the cover before lighting. Do not replace cover during cooking or before appliance has cooled.
- Do not use a flame to check for gas leaks.
- Do not attempt to disconnect any gas connections while your appliance is in use or the gas supply is on.
- Never connect an unregulated gas line to the appliance.
- Have an ABC rated Fire Extinguisher accessible – never attempt to extinguish a grease fire with water or other liquids.

Storage

- When not in use, ensure the gas supply is turned off at the supply cylinder.
- Keep appliance covered when not in use
- Storage of the appliance indoors is permissible only if the cylinder is disconnected and removed from the unit.
- Cylinders must be stored outdoors, out of reach of children and must not be stored in a building, garage, or any other enclosed area.

- Do not store a full LP tank in direct sunlight.
- After a period of storage or non-use, the appliance should be checked for gas leaks, deterioration, proper assembly, and burner obstructions before use.

General Use

- This appliance is not intended to be installed in or on recreational vehicles, trailers or boats.
- After lighting burners, ensure they are operating correctly.
- When using the appliance, be sure that all parts of the unit are firmly in place and that everything is stable.
- On cart mounted units, never move without first allowing the appliance to cool, disconnecting the cable and ensuring that the gas supply is turned off.
- Do not move the appliance during use.
- Children should not be left alone or unattended in an area where the product is being used. Never allow them to sit, stand or play on or around the unit at any time.
- Do not store items of interest to children around or below the appliance.
- Never use the appliance in a windy area.
- To put out flare-ups, adjust the controls to lower the temperature.
- Do not obstruct the flow of combustion and ventilation to the appliance.
- Spiders and insects can nest in the burners or openings and can block or restrict the burner. This can cause a flash back to the control panel which can cause a fire.
- Do not try lighting this appliance without reading the lighting instruction in the user guide.
- Do not locate, store or operate the appliance on a slope.
- This product must be installed by a licensed plumber or gas fitter when installed within the Commonwealth of Massachusetts.
- Never use a dented or rusty LP tank. Keep the ventilation openings of the cylinder enclosure free and clear from debris.
- Clean and perform general maintenance on the appliance regularly. Watch for corrosion, cracks, or insect activity. Check the regulator, hoses, burner ports, air shutter, and venturi/valve section carefully. Always turn off gas at the source prior to inspecting.
- You must inspect the unit at least once a year or immediately if the smell of gas is present in conjunction with the burner flames appearing yellow, the appliance does not reach temperature or heats unevenly or the unit makes popping noises.
- Do not smoke while leak testing and extinguish all open flames.
- When cleaning the burners centre the burner onto the orifice correctly and ensure they are level before lighting to prevent fire hazard or explosion. Refer to the user guide for detailed guidance.
- Use only a Ground Fault Interrupter (GFI) protected circuit with this outdoor cooking gas appliance.
- Unplug from the outlet when not in use and before cleaning. Allow to cool before putting on or taking off parts.
- Do not operate the appliance with a damaged cord, plug, or after the appliance malfunctions or has been damaged in any manner. Contact the manufacturer for repair.
- Do not let the cord hang over the edge of a table or touch hot surfaces.
- When connecting, first connect plug to the appliance then plug appliance into the outlet.
- Do not place the unit directly on the ground or other surface without support. This will prevent damage to the regulator/hose assembly.

Gas requirements

- This appliance can be used with any brand of 20lb LP gas tank provided it is compatible with a proper retention device (not supplied).
- The LP gas cylinder must be:
  - Designed for use with a Type 1 system only.
  - Constructed and marked in accordance with the Specifications for LP gas Cylinders of the U.S. Department of Transportation (D.O.T.) or the Standard for Cylinders, Spheres and Tubes for Transportation of Dangerous Goods and Commission, CAN/CSA-B339
  - Provided with a listed overfilling prevention device.
  - Provided with a cylinder connection device compatible with the connection for outdoor cooking gas appliances
- The cylinder must be provided with a shut-off valve terminating in an LP gas supply cylinder valve outlet specified, as applicable, for connection Type 1.
- Do not change the regulator/hose assembly from that supplied with the unit or attempt to use a Type 1 equipped regulator/hose assembly with a standard 510 POL tank/valve assembly.
- Never use a cylinder with a damaged valve. The cylinder that is used must have a collar to protect the cylinder valve.
- An installer-supplied gas shut-off valve must be installed in an easily accessible location
- All installer supplied parts must conform to local codes, or in the absence of local codes, with the National Electrical Code, ANSI/NFPA 70 or the Canadian Electrical Code, CSA C22.1, and the National Fuel Gas Code, ANSI Z223.1 or CSA-B149.1 Natural Gas Installation Code or CSA-B149.2 Propane Installation Code.
- In Massachusetts such shut-off valves should be approved by the Board of State Examiners or Plumbers & Gas Fitters.
- All pipe sealants must be an approved type and resistant to the actions of LP gases. Never use pipe sealant on flare fittings.
- A dented or rusty LP tank may be hazardous and should be checked by your LP supplier.
- Always check for leaks after every LP tank change.
- For LP units, check with a full cylinder.
- Do not use the appliance until all connections have been checked and do not leak.
- Before each use, inspect the gas supply piping or hose prior to turning the gas ON. If there is evidence of cuts, wear, or abrasion, it must be replaced prior to use. The pressure regulator and hose assembly supplied with the unit must be used. If replacements are needed, contact customer care at www.dcsappliances.com

SAVE THESE INSTRUCTIONS

The models shown in this installation guide may not be available in all markets and are subject to change at any time. For current details about model and specification availability in your country, please visit our website dcsappliances.com or contact your local DCS dealer.

PRODUCT DIMENSIONS

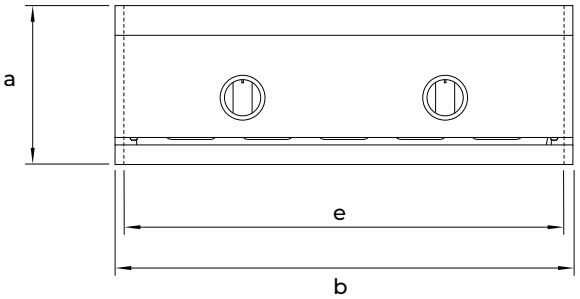

FRONT

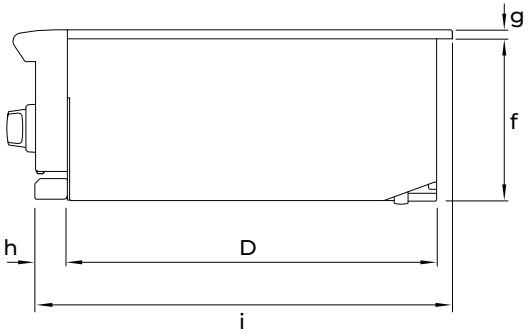

PROFILE

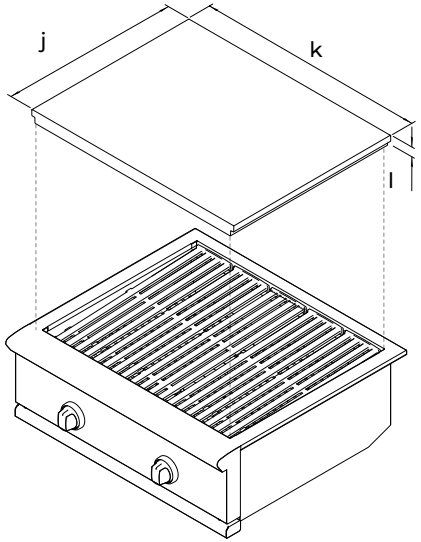

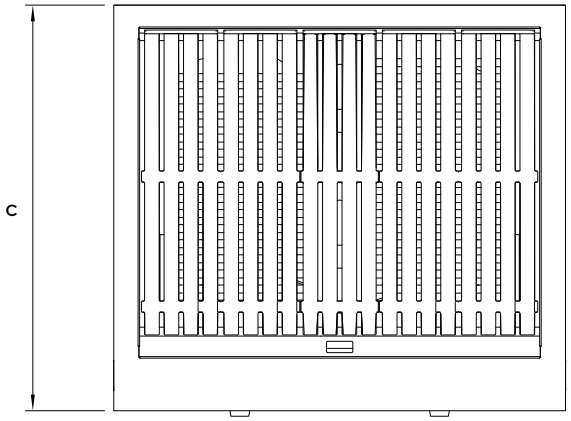

PLAN

PRODUCT DIMENSIONS		BE1-30 MODELS	
		INCHES	MM
A	Overall height of grill	10 1/2	266
B	Overall width of grill	30	762
C	Overall depth of grill (excluding dials)	26 7/8	683
D	Depth of chassis	22 1/2	572
E	Width of chassis (including support bracket)	27 13/16	707
F	Height of chassis	9 15/16	252
G	Height of grill surface above countertop	9/16	14
H	Depth of control panel to front datum	2 1/16	52
I	Depth from control panel to rear of product	25 1/2	648
J	Depth of lid	23	585
K	Width of lid	29 1/2	750
L	Height of lid	1 11/16	43

CUTOUT DIMENSIONS

STANDARD CUTOUT

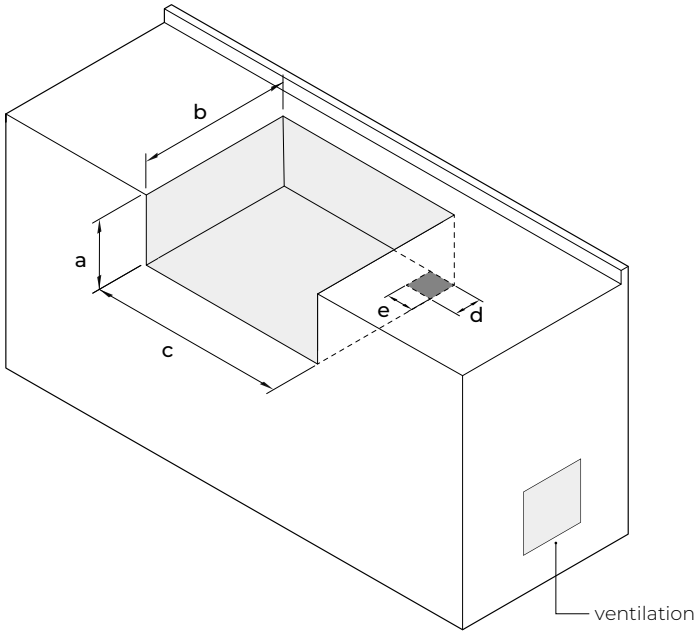

CUTOUT DIMENSIONS	BE1-30 MODELS	
	INCHES	MM
A Height of cutout	10 1/8	257
B Depth of cutout	22 3/4	578
C Width of cutout	28 1/2	724
D Depth of gas supply opening	4 15/16	125
E Width of gas supply opening	4	102

Notes:

- When determining a suitable location, take into account concerns such as exposure to wind, proximity to traffic paths, and keeping any gas supply lines as short as possible.
- Locate the unit in a well-ventilated area.
- The counter and supporting ledges or deck must be level and flat.
- The enclosure should have ventilation holes to prevent gas build-up in the event of a leak. Refer to ANSI Z21.58 Standard for Outdoor Cooking Gas Appliances, Section 1.7 Enclosures For Self Contained LP-Gas Supply Systems.

INSULATED JACKET CUTOUT

If the unit is to be placed into a combustible enclosure, an insulated jacket is required.

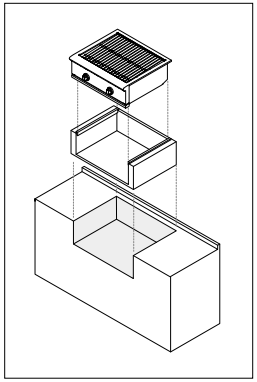

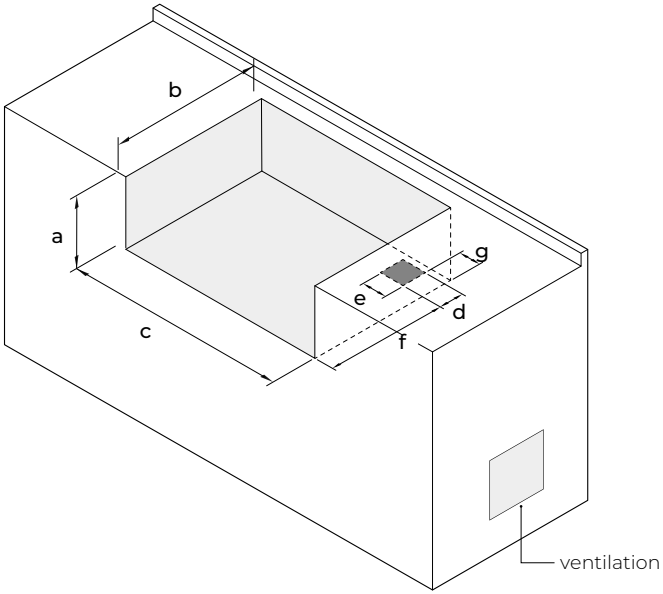

CUTOUT DIMENSIONS	BE1-30 MODELS	
	INCHES	MM
A Height of cutout	11 1/8	283
B Depth of cutout	23 3/4	603
C Width of cutout	34 7/8	886
D Depth of gas supply opening	4	102
E Width of gas supply opening	4	102
F Depth to gas supply opening from front of cutout	18 1/2	470
G Width to gas supply opening from side of cutout	3 1/2	89

Notes:

- Use only the DCS insulated jacket which has specifically been designed and tested for this purpose.
- To purchase access doors and drawers, visit dcsappliances.com
- 30” access doors model number: ADN1-30
- 30” access drawers model number: ADR2-30

Clearances to non-combustible construction

Material which is not capable of being ignited and burned, such as materials consisting entirely of, or a combination of, steel, iron, brick tile, concrete, slate, and plaster.

The grill is designed for easy placement into built-in masonry enclosures. For non-combustible applications the grill drops into the opening and hangs from its side flanges. A deck is not required to support it from the bottom.

Fisher & Paykel recommends installing the manual shut-off valve in a location readily accessible by the customer, so that gas to the appliance can be shut off in an emergency situation. However, the appliance must not be modified in any way to accommodate such placement.

A level should be used to ensure that the unit is level both front-to-back and side-to-side. If it is not level, burner combustion may be erratic or the unit may not function efficiently for grease flow.

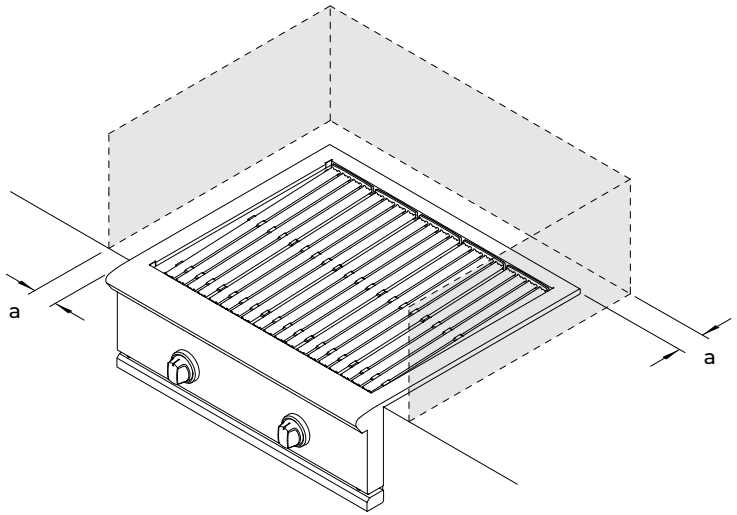

CLEARANCE DIMENSIONS		BE1-30 MODELS	
		INCHES	MM
A	Minimum distance from non-combustible surface to grill (above the cook surface)	3	76

Clearances to combustible construction

Any materials of a building structure or decorative structure made of wood, compressed paper, plant fibres, vinyl/plastic or other materials that are capable of transferring heat or being ignited and burned. Such material shall be considered combustible even though flame-proofed, fire-retardant treated or surface-painted, or plastered.

Do not use this appliance under unprotected overhead combustible surfaces.

Insulated jacket

If the grill is to be placed into a combustible enclosure, an approved insulated jacket is necessary. Insulated jackets are available from your dealer. Use only the DCS insulated jacket which has specifically been designed and tested for this purpose. Review the detail drawing shown and take into account the provisions shown for gas line connection clearance in the right rear corner. It is required that ventilation holes are provided in the enclosure to eliminate the potential build-up of gas in the event of a gas leak. The supporting ledges or deck must be level and flat and strong enough to support the grill and insulated jacket. The counter should also be level.

30” insulated jacket part number: 70859

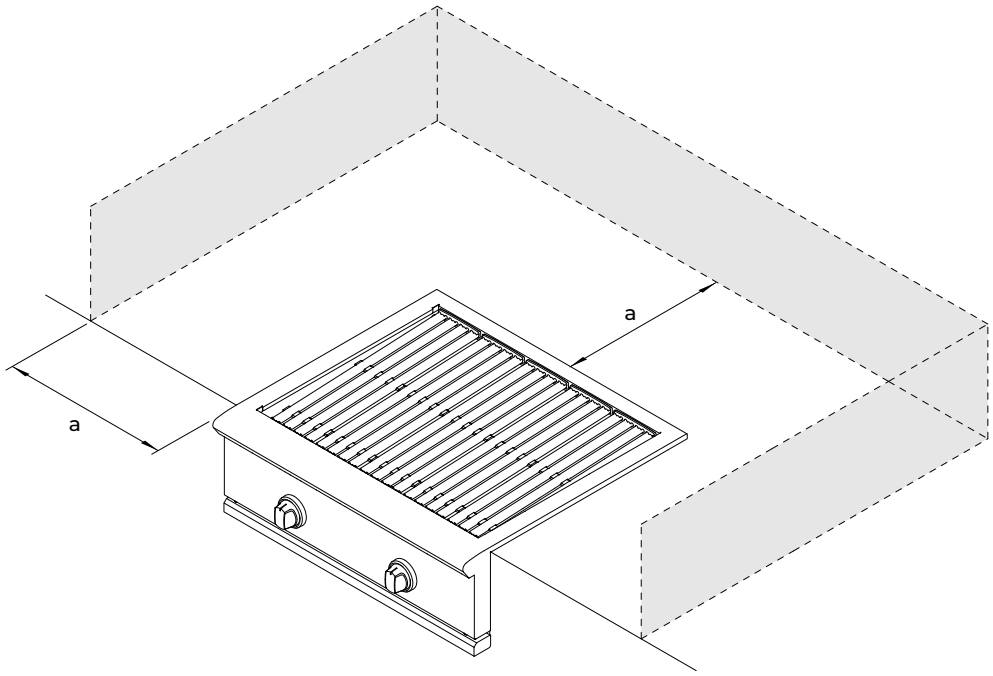

CLEARANCE DIMENSIONS		BE1-30 MODELS	
		INCHES	MM
A	Minimum distance from combustible surface to grill (above the cook surface)	18	457

ELECTRICAL CONNECTION

All units are supplied with a 12V power transformer to operate the products ignition and dial illumination features. The transformer is sealed in a box with an attached power supply cord.

Electrical requirements

Use only a Ground Fault Interrupter (GFI) protected circuit with this product.

An outdoor 120VAC 15A GFI electrical outlet should be installed by a qualified electrician either inside the island enclosure for built-in units, or near the location where a free-standing unit will be used. For built-in products, the supplied 12V transformer should be connected during installation.

Installation

The transformer must be secured below the product in a dry location away from any excessive heat. Be sure to provide adequate access to facilitate service if the transformer or connections require maintenance.

Dial halos

When a dial is in use, an orange halo around that dial will illuminate. This will change from orange to white if the dial is turned to OFF but another dial remains active. If all dials are turned OFF, all halos will dim.

Multiple DCS Series 9 products may be linked together to allow for cross-product halo illumination. To allow for this functionality, an approved DCS kit is required and can be **purchased separately** from your local DCS dealer.

If the ignition or dial halos fail to operate, a connection may have come loose during installation or the GFI may have tripped requiring a reset. Refer to the troubleshooting section of your user guide for further guidance.

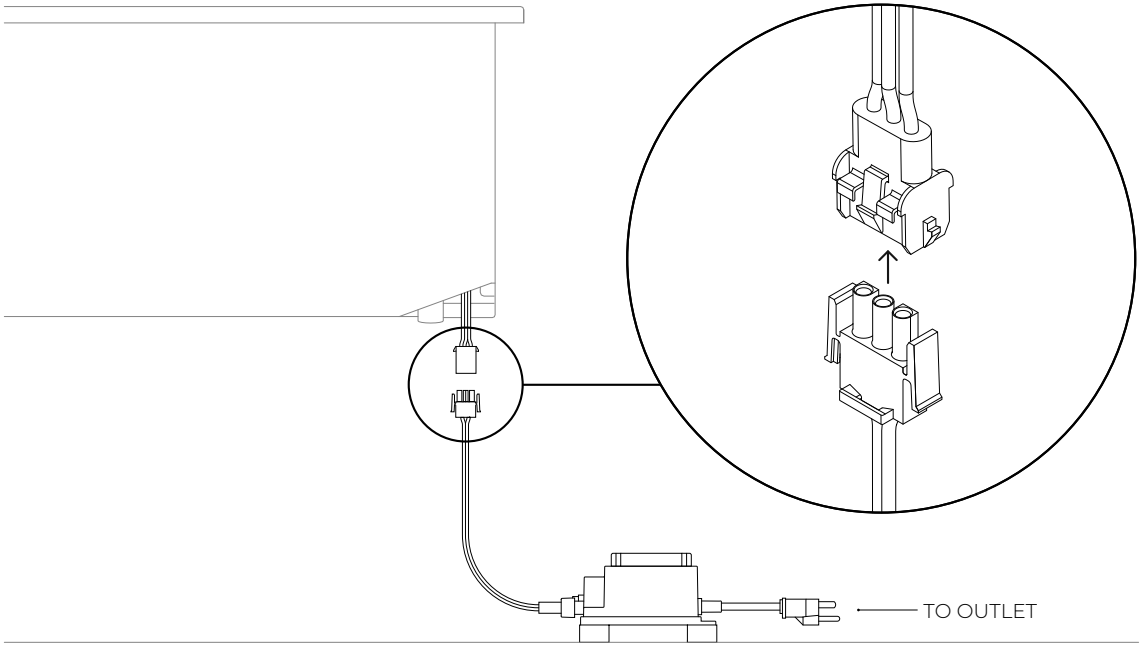

GAS REQUIREMENTS

Verify the type of gas supply to be used, either natural or LP, and make sure the marking on the appliance rating plate agrees with that of the supply. The rating plate is located on the underside of the drip tray. Never connect an unregulated gas line to the appliance. You must use a gas regulator even if the supply is controlled.

Gas conversion kits are available from Customer Care. When ordering gas conversion kits, have the model number, and the type of gas (natural or LP) from your grill.

The appliance and its individual shut-off valve must be disconnected from the gas supply piping system during any pressure testing of that system at test pressures in excess of 1/2 PSIG (3.5 kPa.) The appliance must be isolated from the gas supply piping system by closing its individual manual shut-off valve during any pressure testing of the gas supply piping system at test pressures equal to or less than 1/2 PSIG (3.5 kPa.).

Total gas consumption of the grill with all burners on HI

BE1-30: 64,000 Btu/hr or 67.5MJ/h

Note:

- If it is evident there is excessive abrasion or wear, or the hose is cut, it must be replaced prior to the outdoor cooking gas appliance being put into operation.
- The replacement hose assembly shall be that specified by the manufacturer.

NATURAL GAS CONNECTION

Connection: 1/2” NPT female. **Operating pressure:** 4.0” W.C. **Supply pressure:** 5” to 14” W.C.

If in excess of 14” W.C. a step down regulator is required. Check with your local gas utility company or local codes for instructions on installing gas supply lines. Be sure to check on type and size of run, and how deep to bury the line. If the gas line is too small, the grill will not function properly.

Connecting the fittings supplied with the grill

Use threading compound on male threads only. Use a second pipe wrench to hold the grill inlet pipe to avoid shifting any internal gas lines of the grill. Ensure that the regulator arrow points in the direction of gas flow towards the unit, away from the supply. Do not forget to place the installer-supplied gas valve in an accessible location.

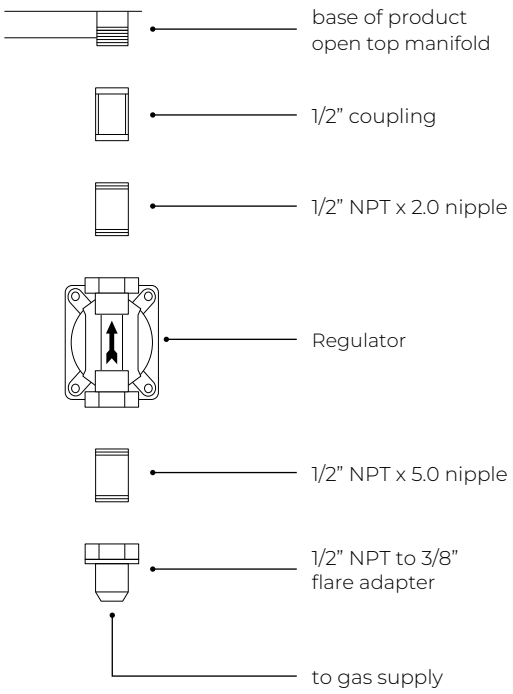

CART LP CONNECTION

Units set for use with LP gas come equipped with a high capacity hose/regulator assembly for connection to a standard 20 lb. LP cylinder (Type 1). The LP tank is not included. The grill system is leak tested, do not remove the Regulator/Hose assembly from the product during cart installation.

Connection: LP Hose with a type 1 quick disconnect and regulator. **Operating pressure:** 11.0"W.C.

Connecting LP regulator/hose assembly to the tank/valve assembly

First, ensure the main valve on the tank is completely closed, all burner dials are in the OFF position and the cart is stable. Although the flow of gas is stopped when the Type 1 system is disconnected as part of its safety feature, you should always turn off the LP tank main valve after each use and during transport of the tank or unit.

Open the tank drawer of the cart and place the LP tank into the tank retention device (as shown in the cart installation guide). Insert the regulator inlet into the tank valve and turn the black coupler clockwise until it tightens. Do not over tighten the coupler. Turn the main tank valve ON and the burner control valves to HI for about 20 seconds to allow the air in the system to purge. Turn valves OFF and wait 5 minutes before attempting to ignite the burners.

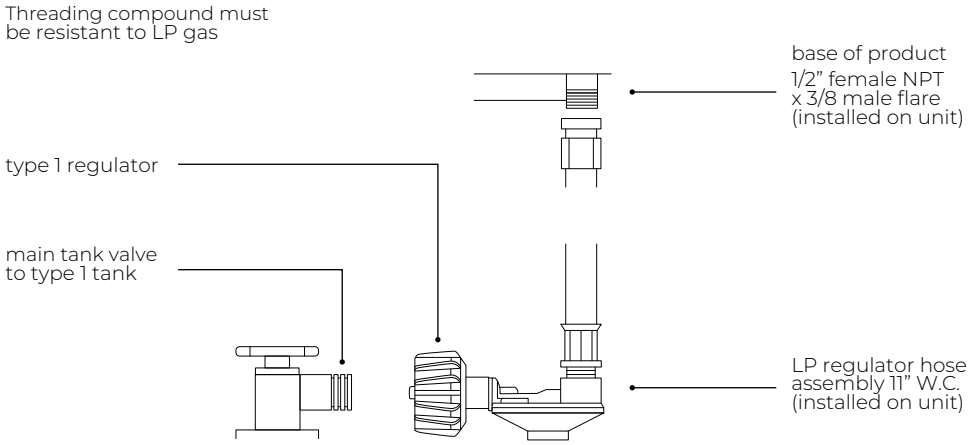

Changing the LP cylinder

Ensure the main tank valve is turned off before turning the coupler counter clockwise, the inlet will then disengage. Remove the inlet from the tank valve opening. Your local LP filling station should be equipped with the proper equipment to fill your tank.

Do not attempt to remove, repair or replace the regulator/hose assembly. This must be done by qualified and licensed technician only.

BUILT-IN LP CONNECTION

If the grill is to be installed in a built-in application, then the grill must be installed in accordance with the built–in installation guidelines and the LP regulator/hose assembly must be removed from the product.

When an LP unit is being directly connected to an LP house system, you must follow the natural gas connection guidelines. The installer must provide the proper gas regulator to reduce the gas pressure to 11" W.C.

Connection: LP Hose with a Type 1 quick disconnect and regulator. **Operating pressure:** 11.0" W.C.

To operate your built-in grill on LP gas utilizing a 20lb type 1 cylinder, then a built-in LP tank restraint must be installed prior to initial use of the grill. The Installer must supply ½" ID Flex hose and fixed pipe and a flare adaptor

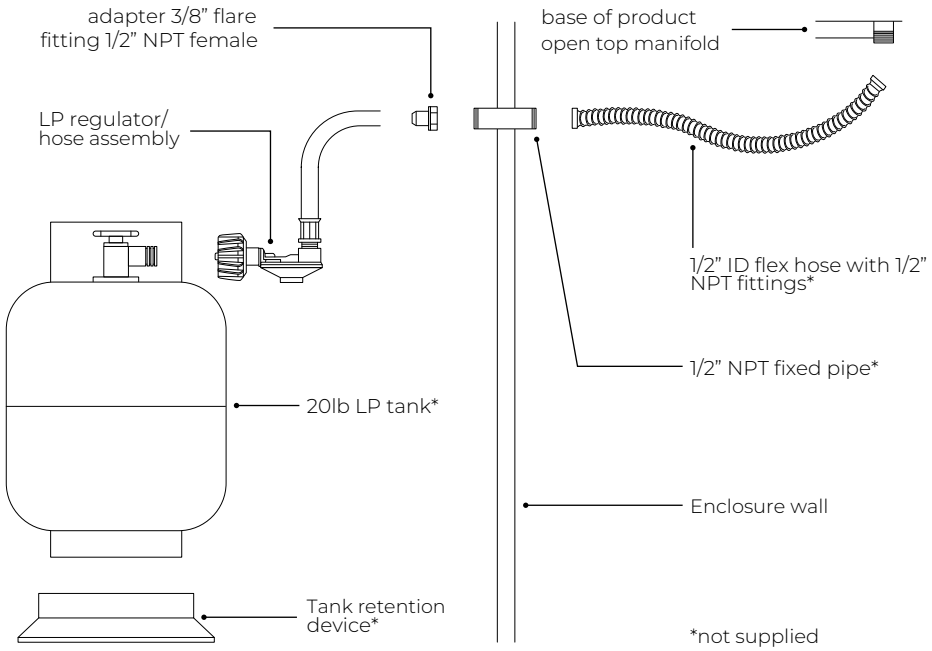

LEAK TESTING

A complete gas tightness check must be performed at the installation site. Periodically check the whole system for leaks, or immediately if the smell of gas is present.

1

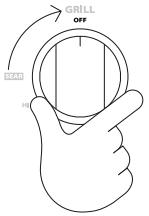

Prepare soap solution by combining one part liquid detergent and one part water. Pour into a spray bottle. Ensure all control valves are in the OFF position before turning the gas supply ON.

2

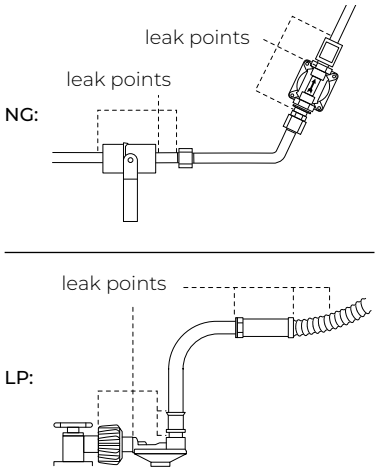

Check all connections from the supply line or LP cylinder by applying the solution around the connection, tubing and end of the manifold. Soap bubbles will appear where a leak is present.

If a leak is present

Immediately turn the gas supply OFF and tighten any leaking connections. Turn gas ON, and recheck. If you cannot stop a gas leak turn the gas supply OFF and call your local gas utility or the dealer you purchased the appliance from. Only parts recommended by the manufacturer should be used on the grill, substitution can void the warranty.

RADIANT TRAYS

Before assembling the radiant, check that the radiant trays have not moved during transit. They should sit securely on their locating pins in the base of the grill.

1

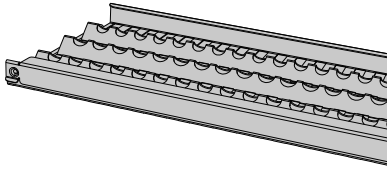

Unpack ceramic rods and remove radiant from the unit.

2

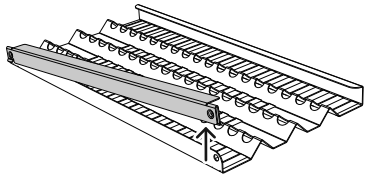

Unlock radiant end cap by pushing it up with two fingers.

3

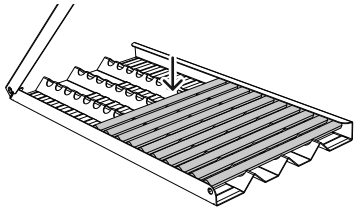

Place all ceramic rods onto the radiant.

4

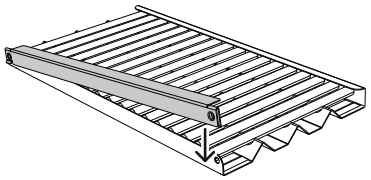

Lock radiant end cap and place the assembled radiant into the unit.

If a ceramic rod breaks

Unlock radiant end cap by pushing it up with two fingers and replace broken ceramic rod. Lock radiant end cap. To order replacement rods, please visit www.dcsappliances.com

BURNER ADJUSTMENT

FLAME HEIGHT ADJUSTMENT

Flames should be blue and stable with no yellow tips, excessive noise or lifting (Note: LP units may have some yellow tipping). If any of these conditions exist, check the air shutter and burner ports are clear. If cleaning these does not improve performance, the air shutter can be adjusted as per the instructions below.

1

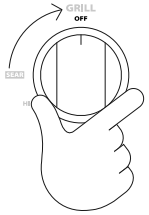

Ensure the grill is OFF and cool.

To access the air shutters, remove the grate, radiant and U-burner.

2

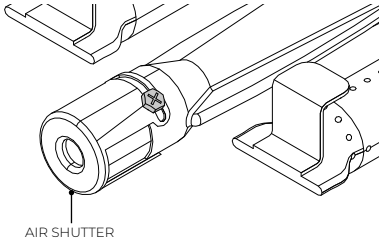

With a screw driver, loosen the lock screw on the face of the air shutter so it can be adjusted. If the flame is yellow turn the air shutter counter-clockwise, if the flame is noisy and tends to lift turn the air shutter clockwise.

3

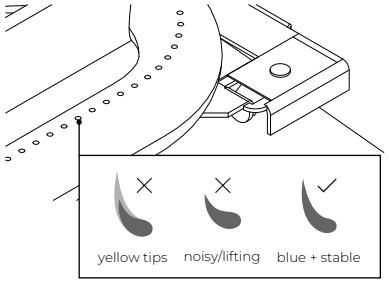

Reinstall the U-burner and light to check. If the flame is blue and stable, remove the burner, tighten the air shutter screw and replace all parts. If flame is still unstable, repeat the above steps.

LOW FLAME ADJUSTMENT

The valves on the grill feature an adjustable low setting. Due to fluctuations in gas pressure, or heating value you may want to increase or decrease gas flow in the low position. If the gas type has been converted from natural to LP or vice-versa, the low flame setting must be reviewed and adjusted.

1

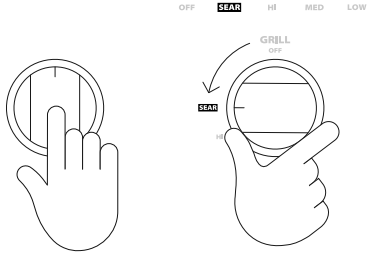

Push in and hold the selected dial for 2 seconds before turning to SEAR. Hold for 10 seconds to light the selected burner.

2

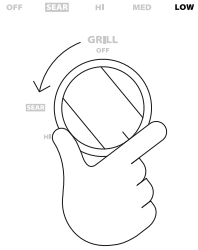

Turn the control dial counter-clockwise to the lowest setting.

3

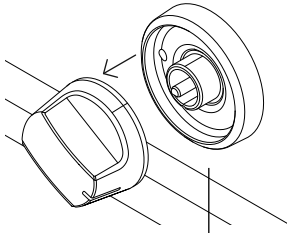

Remove the dial.

4

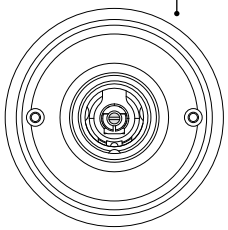

BEZEL FRONT VIEW

Hold the valve shaft with pliers, insert a flat-tipped screwdriver into the shaft and, while viewing the burner, adjust to a minimum stable flame.

FREESTANDING CART INSTALLATION (OPTIONAL)

Designed with flexibility in mind, the 30” grill can be either built-in or mounted on a freestanding cart. If the grill is to be placed onto a freestanding cart, an approved DCS cart is required and can be **purchased separately** from your local DCS dealer.

CAD1-30 freestanding cart part number: 71131

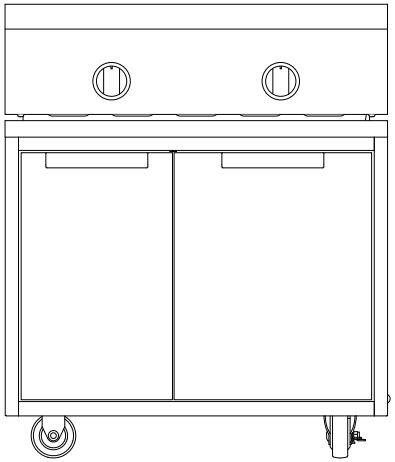

IMPORTANT!

- For further guidance, refer to the installation guide provided with your freestanding cart.
- Wear gloves when handling the cart, some edges may be sharp.
- Two or more people are required to move and assemble the cart.
- Push or pull the cart at the corners, do not move by the drawers or handles.
- To prevent tipping, do not push down on top of the drawers.
- For optimal use, this product should be located on a level surface with minimum flat area of 30x48” (762 x 1219mm). Any bumps, cracks or protrusions should be less than 1/4”.
- Do not overload the drawers. The maximum rating of each drawer is 35lbs.

Preparing the grill

1

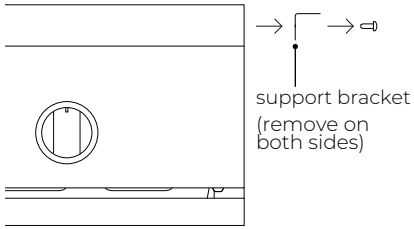

Remove the support brackets from the sides of the grill and replace with the supplied cart mount brackets.

2

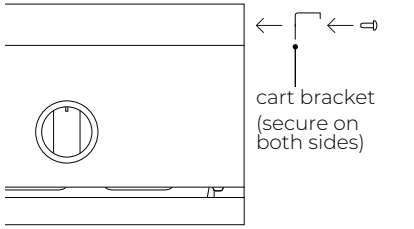

Secure cart mounting brackets using four of the supplied 10-24 x 1/2” screws on each side.

Securing grill to cart

1

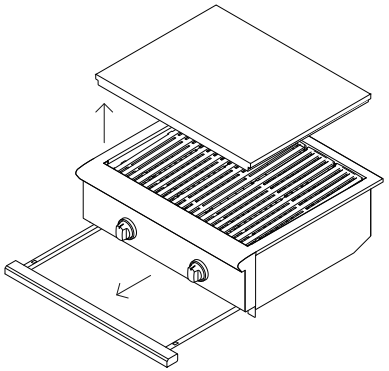

Remove the drip pan and any other removable components from the grill.

2

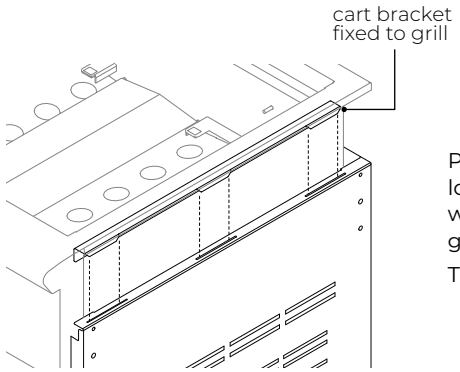

Place the grill head on the cart by locating the rear side tabs of the grill with the slots on the cart. Lower the grill and locate the remaining tabs.

The grill should sit flush on the cart.

3

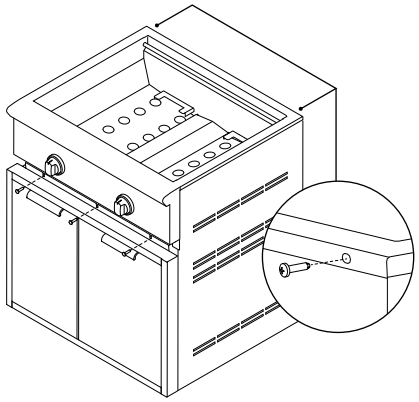

Secure the grill to the cart with two Phillips-head screws at the rear and three at the front.

Replace any components removed in step 1 before referring to page 9 for gas connection advice.

INSTALLER CHECKLIST

Read all installation instructions in this manual to see if the unit has been correctly installed.
Ensure that installation has been completed correctly before use.

Ensure that:

- ☐ specified clearances are maintained to combustibles
- ☐ proper enclosure ventilation has been verified
- ☐ all internal packaging and any adhesive residue is removed
- ☐ the burner is level and does not rock
- ☐ shipping bracket removed
- ☐ dials turn freely, bezels centered
- ☐ halo lighting is functioning correctly
- ☐ all warning labels removed and supplied to customer for future reference
- ☐ the low flame setting is satisfactory
- ☐ the drip pan is in place properly and sliding freely
- ☐ each burner lights satisfactorily - individually or with adjacent burner lit
- ☐ the pressure regulator is connected and set for 4.0” W.C. Natural, 11.0” W.C. LP gas
- ☐ the manual shut-off valve is installed and accessible
- ☐ the unit has been tested and is free of leaks
- ☐ the user is informed of gas supply shut-off valve location

---

Complete and keep for safe reference:

Model _____

Serial No. _____

Purchase Date _____

Purchaser _____

Dealer Address _____

Installer’s Name _____

Installer’s Signature _____

Installation Company _____

Installation Date _____

DCSAPPLIANCES.COM

© Fisher & Paykel Appliances 2019. All rights reserved.
The product specifications in this document apply to the specific products and models described at the date of issue. Under our policy of continuous product improvement, these specifications may change at any time. You should therefore check with your Dealer to ensure this document correctly describes the product currently available.

US CA