DCS

PROFESSIONAL GRILL

BE1-36RCI and BE1-48RCI models

⚠ DANGER

IF YOU SMELL GAS

- **Shut off gas to the appliance.**
- **Extinguish any open flame.**
- **Open lid.**
- **If odor continues, keep away from the appliance and immediately call your gas supplier or your fire department.**

⚠ WARNING

- **Do not store or use gasoline or other flammable liquids or vapors in the vicinity of this or any other appliance.**
- **An LP cylinder not connected for use must not be stored in the vicinity of this or any other appliance.**
- **Do not spray aerosols in the vicinity of this appliance while it is in operation.**
- **Do not use or store flammable materials in or near this appliance.**
- **Do not place articles on or against this appliance.**
- **Do not modify this appliance.**
- **Do not use an adaptor at the cylinder connection.**

CONTENTS

Safety and warnings	3
Grill models	6
Product dimensions	7
Installation	9
Locating Grill / Built-in Clearances	9
Built-in Construction Details	15
Gas Hook-up	17
Leak Testing	22
Electrical Connection	23
Burner Adjustment	24
Radiant Tray Assembly	25
Natural Gas	25
LPG	25
Installer Checklist	26
Using the grill	27
Lighting Instructions	27
Grilling	28
Using the U-burners	30
Using the Sear burner	31
Grate positions	32
Using the multi-tool	33
Charcoal insert	34
Using the rotisserie	35
Accessories	40
Care and maintenance	41
Troubleshooting	46
Wiring diagrams	47
Warranty and service	49

IMPORTANT!

SAVE THESE INSTRUCTIONS

The models shown in this user guide may not be available in all markets and are subject to change at any time. For current details about model and specification availability in your country, please visit our website listed on the back cover or contact your Fisher & Paykel dealer.

A MESSAGE TO OUR CUSTOMERS

Thank you for selecting this DCS Evolution Series Grill. This installation and user guide contains valuable information on how to properly install, operate and maintain your new appliance for years of safe and enjoyable cooking.

Please fill out and submit your Product Registration by visiting our website at www.fisherpaykel.com and selecting “Support” on the home page and then selecting “Product Registration”. In addition, keep this guide handy, as it will help answer questions that may arise as you use your new appliance.

For your convenience, product questions can be answered by a DCS Customer Care Representative at www.fisherpaykel.com, or email: customer.care@fisherpaykel.com.

Please write the model, code, and serial numbers on this page for reference (this can be found on the inside, right side panel behind the drip pan handle. See page 26.)

MODEL NUMBER _____ CODE _____ SERIAL NUMBER _____

IMPORTANT!

DO NOT discard any packing material (box, pallet, straps) until the unit has been inspected. Inspect the product to verify that there is no shipping damage. If any damage is detected, call the shipper and initiate a damage claim. DCS by Fisher & Paykel is not responsible for shipping damage.

SAFETY AND WARNINGS

To reduce the risk of fire, electrical shock, injury to persons, or damage when using the appliance, follow the important safety instructions listed below:

⚠ WARNING!

Hot Surface Hazard
Accessible parts may become hot during use.
Do not touch surface units or areas near units of the grill.
Hood must be opened before lighting the grill.
Never let clothing or other flammable materials come in contact with or get too close to any grate, burner or hot surface until it has cooled. Fabric may ignite and result in fire or personal injury. Keep outdoor cooking gas appliance area clear and free from combustible materials, gasoline and other flammable vapors and liquids.
Never lean over an open grill. When lighting a burner, always pay close attention to what you are doing. Be certain you are pushing the burner knob when you attempt to light the grill.
When using the grill, do not touch the grill burner, grate, or immediate surrounding area as these areas become extremely hot and could cause burns.
Grease is flammable. Never operate the grill without a grease tray. Let hot grease cool before attempting to handle it. Avoid letting grease deposits collect in the drip pan.
Clean the grill with caution. Avoid steam burns; do not use a wet sponge or cloth to clean the grill while it is hot. Some cleaners produce noxious fumes or can ignite if applied to a hot surface.
Use only dry potholders; moist or damp potholders on hot surfaces may cause burns from steam. Do not use a towel or bulky cloth in place of potholders. Do not let potholders touch hot portions of the grill or burner grate.
To avoid burns when cooking, use long handled BBQ tools.
Failure to follow this advice may result in burns and scalds or serious injury.

⚠ WARNING!

Explosion Hazard
If you smell gas, do not use the appliance.
Do not use water on grease fires, a violent steam explosion may result. Turn all burners off, then smother fire or flame or use dry chemical or foam-type extinguisher.
Do not heat unopened food containers such as cans – Build up of pressure may cause container to burst and result in injury.
Failure to follow this advice may result in injury or death.

⚠ WARNING!

Fire Hazard
Do not operate the grill under unprotected combustible construction. Use only in well ventilated areas. Do not use in buildings, garages, sheds, breezeways, covered structures or other such enclosed areas. This unit is for outdoor use only.
Never leave the grill unattended when in use.
Never store a spare LP cylinder under or near this unit.
Never fill the cylinder beyond 80 percent full.
Failure to follow this advice may result in death or serious injury.

⚠ WARNING!

Electrical Shock Hazard
This appliance is equipped with a three-prong or four-prong grounding plug for your protection against shock hazard and should be plugged directly into a properly grounded power outlet. Do not under any circumstances cut or remove the grounding prong from this plug.
Failure to follow this advice may result in death or electrical shock.

IMPORTANT SAFETY INSTRUCTIONS!

- **Do not try lighting this appliance without reading the "LIGHTING INSTRUCTIONS" section of this manual (page 27).**
- **This grill must be installed according to these instructions and in compliance with the requirements of the current version of AS/NZS 5601.1, local authority, gas, electricity, and any other statutory regulations. Failure to install the product correctly could invalidate any warranty or liability claims.**
- **Refer to the current version of AS/NZS 5601.1 for pipe sizing details.**
- **Begin by ensuring proper installation and servicing. Follow the installation instructions within this manual. Have your grill installed by a qualified installer. Have the installer show you where the gas supply shut-off valve is located so that you know where and how to shut off the gas to the grill. If you smell gas, your installer has not done a proper job of checking for leaks. If the connections are not perfectly sealed, you can have a small leak and therefore a faint gas smell. Some leaks can only be found with the burner control in the "SEAR" position and this must be done by a qualified gas fitter.**
- **Children should not be left alone or unattended in an area where the grill is being used. Never allow them to sit, stand or play on or around the grill at any time. When in use, portions of the grill get hot enough to cause severe burns.**
- **Do not store items of interest to children around or below the grill, in the cart or masonry enclosure. Never allow children to crawl inside a cart or enclosure.**
- **Never attach or disconnect an LPG cylinder, or move or alter gas fittings when the grill is in operation or is hot.**
- **Use caution when closing the hood, especially if there are children around. Check that the path of the hood is clear, as its weight could cause injury to hands or fingers caught under it.**
- **Clean and perform general maintenance on the grill twice a year. Watch for corrosion, cracks, or insect activity. Have a qualified gas fitter check the regulator, hoses, burner ports, air shutter, and venturi/valve section carefully. Always turn off gas at the source (cylinder or supply line) prior to inspecting parts.**
- **After a period of storage or non-use (such as over the winter), the gas grill should be checked for gas leaks, deterioration, proper assembly, and burner obstructions before using.**
- **Always use a covered hand when opening the grill hood and only do so slowly to allow heat and steam to escape.**
- **After lighting burners, make sure burners are operating normally (see section "Burner adjustment").**
- **The sear burner is designed specifically for searing food. Do not use the griddle plate accessory or charcoal insert or cover it with any other utensil type except the sear hot plate.**
- **Do not use aluminium foil to line drip pans or grill grates or radiants. This can severely upset combustion air flow or trap excessive heat in the control area. The result of this can be melted knobs or damaged ignition components.**
- **The prongs of the rotisserie forks are very sharp. Take care when unpacking, assembling, or handling the rotisserie to avoid injury.**
- **Do not operate with a damaged cord or plug or after the appliance malfunctions or has been damaged in any manner. Contact the manufacturer for repair.**
- **Do not let the cord hang over the edge of a table or touch hot surfaces.**
- **Do not use an outdoor cooking appliance for purposes other than intended.**
- **This appliance is not intended for use by persons (including children) with reduced physical, sensory or mental capabilities, or lack of experience and knowledge, unless they have been given supervision or instruction concerning use of the appliance by a person responsible for their safety.**
- **Do not modify this appliance.**
- **Do not use lighter fluid in the outdoor grill. Combustible fuels must not be used with the appliance.**
- **Keep any electrical supply cord, or the rotisserie motor cord away from the heated areas of the grill** and water (pools, fountains, puddles).
- Never use a dented or rusty LPG cylinder. Keep the ventilation openings of the cylinder enclosure free and clear from debris.
- Do not move the appliance during its use.
- Do not locate the outdoor grill in an inclined plane. Be sure to lock the castor wheels before operating the unit.

IMPORTANT SAFETY INSTRUCTIONS!

- **Keep the area surrounding the grill free from combustible materials, trash, or combustible fluids and vapours such as gasoline or charcoal lighter fluid. Do not obstruct the flow of combustion and ventilation air.**
- **Some synthetic fabrics are highly flammable and should not be worn while cooking. Only certain types of glass, heat-proof glass ceramic, earthenware, or other glazed utensils are suitable for grill use. Use of these types of materials may break with sudden temperature changes. Use only on low or medium heat settings according to the manufacturer's directions.**
- **Spiders and insects can nest in the grill burners, causing gas not to flow through the burner. The gas will flow from the front of the burner into the control panel. This is a very dangerous condition which can cause a fire to occur behind the valve panel, thereby damaging the grill components and making it unsafe to operate.**
- **When using the side burners always use flat bottomed pans which are large enough to cover the side burner. Adjust the flame so that it heats only the bottom of the pan to avoid ignition of clothing. Position handles inward away from open edges of the unit to avoid burns associated with unintentional spillovers. Hold the handle of the pan to prevent movement of it when turning or stirring food. For proper lighting and performance of the burners keep the ports clean. It is necessary to clean periodically for optimum performance.**
- **Do not use the grill for cooking excessively fatty meats or products which promote flare-ups.**
- **Never grill without the drip pan and grease tray in place and the drip pan pushed all the way to the back of the grill. Without it hot grease could leak downward and produce a fire or explosion hazard.**
- **Always ensure adequate ventilation for the grill. Never block any ventilation openings.**
- **If a cart unit is stored indoors, ensure that it is cool, fold the side shelf down, then push the grill, never pull. Never push or pull on the side shelves. If LPG, the cylinder must be unhooked and the LPG cylinder stored outside in a well ventilated area, out of reach of children.**
- **If grill is mounted on a mobile cart: do not remove castor wheels from cart, as resting the cart directly on its base will block ventilation openings, causing a hazardous situation. Keep ventilation openings on side walls and base of cart unobstructed at all times.**
- **Never use the grill in a windy area.**
- **Have an ABC-rated Fire Extinguisher accessible – never attempt to extinguish a grease fire with water or other liquids.**
- **When using a grill, be sure that all parts of the unit are firmly in place and that the grill is stable (can't be tipped over).**
- **To put out flare-ups, adjust the controls to lower the temperature.**
- **When cooking with the hood closed, use the LOW setting only.**
- **Never use the grill or sear burner while the rotisserie burner is lit.**
- **This outdoor cooking gas appliance is not intended to be installed in or on recreational vehicles, trailers and/or boats. Do not install in, or connect to consumer piping or gas supply of a boat or caravan.**
- **If you own or use a spare tank, or have a disconnected tank, you should NEVER store it near or under the grill/cart unit or heat box, or near any other ignition or heat source. A metallic sticker with this warning is provided with the grill to remind you, your family and all others who may use your BBQ grill of these safety precautions. Install this sticker close to your barbeque grill.**

⚠ DANGER

Fire Hazard

NEVER store a spare LPG cylinder under or near this unit.

NEVER fill an LPG cylinder beyond 3/4 full.

Doing so could result in a fire causing serious injury or death.

Sticker

	MODELS SET FOR NATURAL GAS PRESSURE: 1.00KPA	MODELS SET FOR ULPG PRESSURE: 2.75KPA
BE1-36RCI	MM	MM
Grill Burners	2.44	1.40
Rotisserie Burner	1.78	1.15
Sear Burner	2.38	1.40
Grill Burners	2.44	1.40
Rotisserie Burner	1.99	1.25
Sear Burner	2.38	1.40

GRILL MODELS

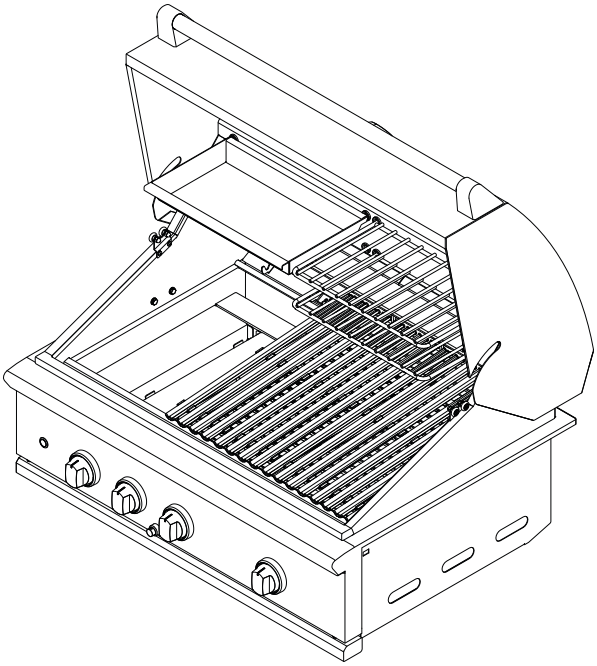

BE1-36RCI

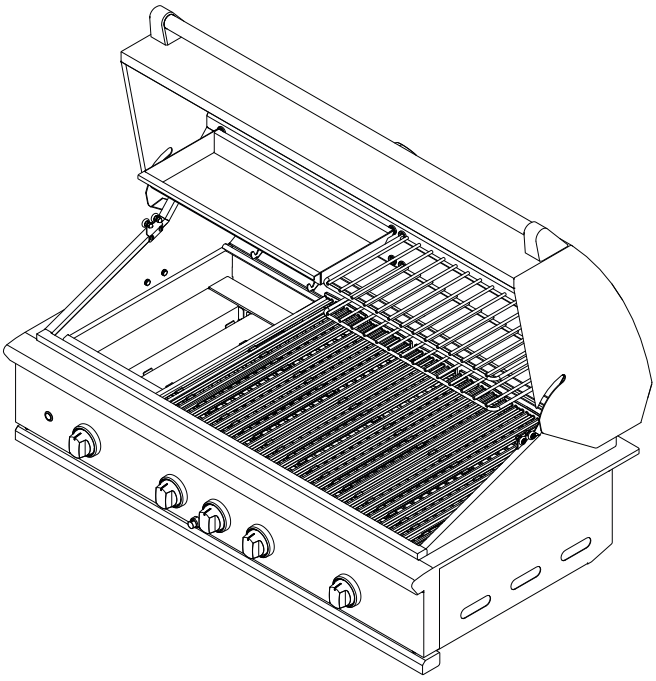

BE1-48RCI

PRODUCT DIMENSIONS

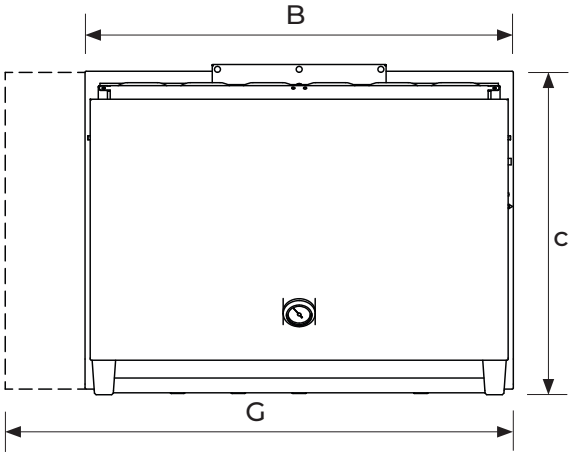

PLAN VIEW

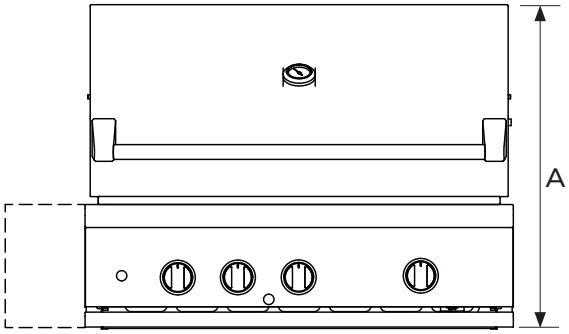

FRONT VIEW

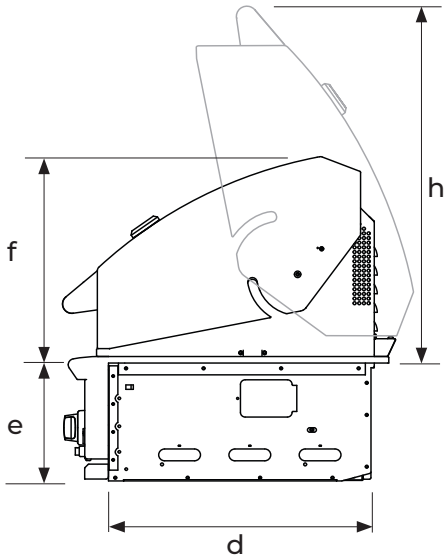

PROFILE VIEW

PRODUCT DIMENSIONS		BE1-36RCI models
		mm
A	Overall height of grill	692
B	Overall width of grill	912
C	Overall depth of grill (excluding handle and dials)	682
D	Depth of chassis	559
E	Height of chassis	252
f	Height of hood	443
G	Overall width of grill with storage unit attached	1065
h	Height from top of hood to top of countertop	690

PRODUCT DIMENSIONS

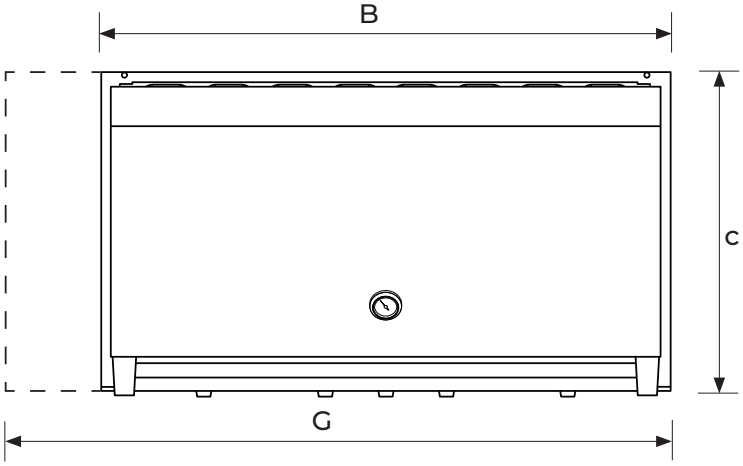

PLAN VIEW

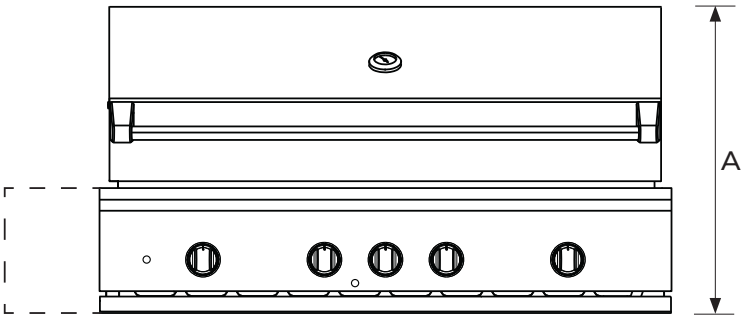

FRONT VIEW

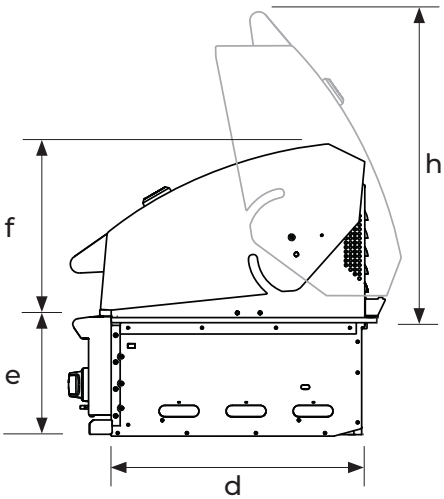

PROFILE VIEW

PRODUCT DIMENSIONS		BE1-48RCI models
		mm
A	Overall height of grill	692
B	Overall width of grill	1217
C	Overall depth of grill (excluding handle and dials)	682
D	Depth of chassis	559
E	Height of chassis	252
f	Height of hood	443
G	Overall width of grill with storage unit attached	1369
h	Height from top of hood to top of countertop	690

Locating Grill / Built-in Clearances

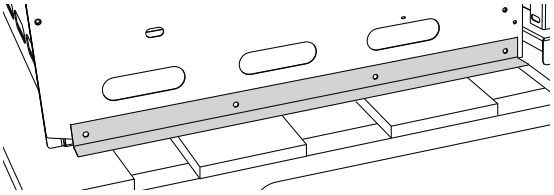

IMPORTANT!

Before installation, remove shipping brackets from the grill. Loosen the four screws. Slide the shipping bracket off and re-tighten the screws.

Location

When determining a suitable location, take into account concerns such as exposure to wind, proximity to traffic paths and keeping any gas or electrical supply lines as short as possible and away from heat sources. Locate the grill only in a well ventilated area. Do not build the grill under overhead unprotected combustible construction. Never locate the grill in a building, garage, breezeway, shed or other such enclosed areas. During heavy use, the grill will produce a lot of heat and smoke. Ensure that the grill is used in a well ventilated area.

If locating the grill in a windy area, try to locate the grill so the prevailing wind will blow air at the front of the grill as shown in Fig. 01b. This will assist the grill in venting hot air through the back of the grill. In addition, this will help keep any smoke from blowing at someone who is cooking on the grill. If you have to locate the grill in a windy area where the prevailing wind is at the rear of the grill (Fig. 01a), a windscreen must be installed. The windscreen should be set-up so that it blocks wind from entering the exhaust vent in the rear of the unit as shown in Fig. 01c. Location of the windscreen relative to rear of the grill must adhere to the clearances specified for combustible or non-combustible construction as defined in these instructions. Refer to following pages.

As a high-performance gas appliance, your grill requires significant amounts of air to support the combustion process. Your grill is designed to take air in through the valve panel area, and send the exhaust products out through the exhaust gap at the rear of the hood. Using your grill in windy conditions can disrupt the proper flow of air though your grill, leading to reduced performance, or in certain severe cases, causing heat buildup in the valve panel area. This can lead to problems such as having the knobs melt, or burn hazards when the valve panel surfaces become too hot to touch.

Please note that damage to your grill resulting from use in windy conditions, such as melted knobs or igniter wires, or valve panel discoloration from heat build-up, are excluded from warranty coverage.

Locating Built-in Clearances

IMPORTANT!

Gas fittings, regulator, and installer supplied shut-off valves must be easily accessible.

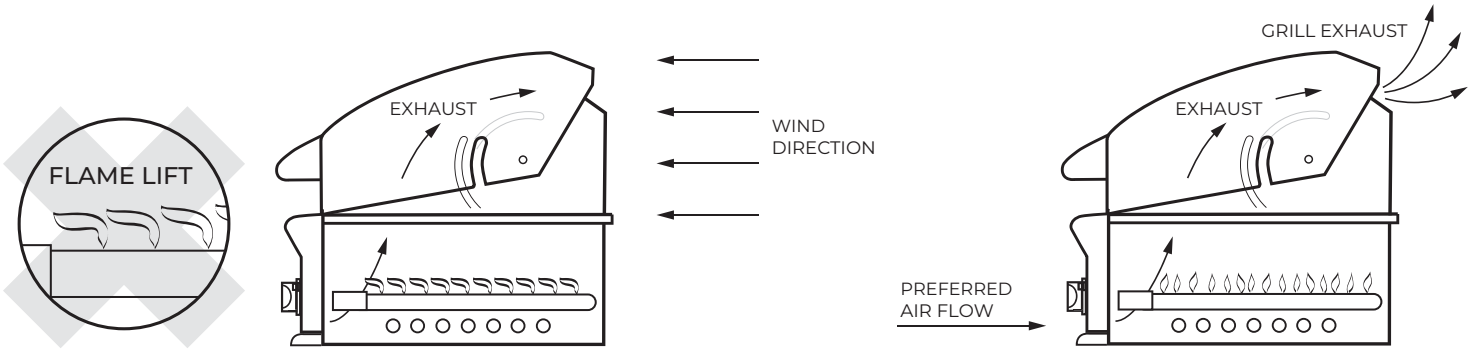

FIG. 01a FIG. 01b

Wind hitting the grill while in use, (especially wind blowing into or across the hood gap) can cause poor performance and in some cases can cause the control panel to get dangerously hot.

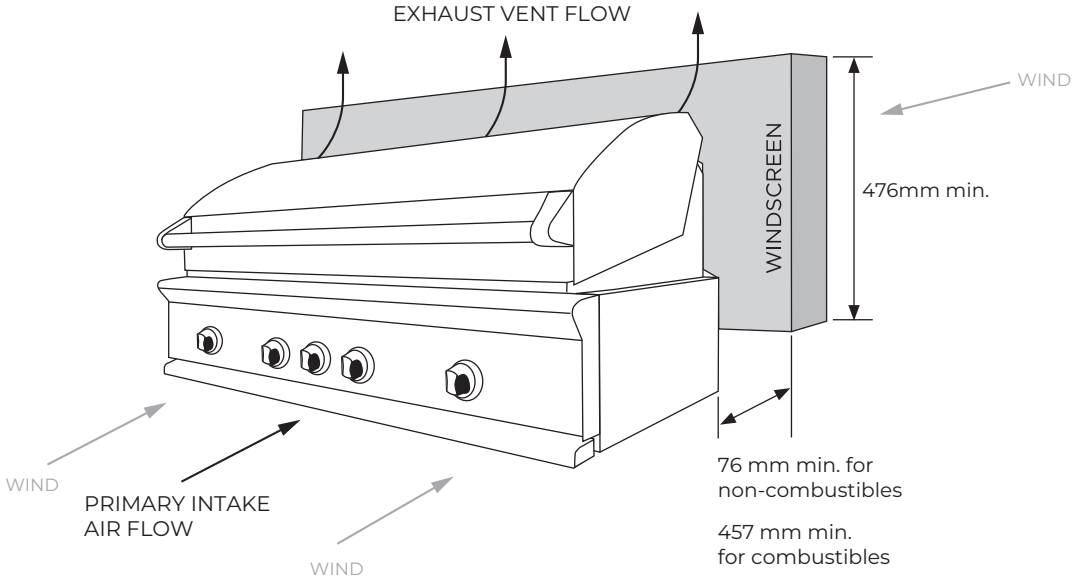

FIG. 01c

If wind is an issue, a windscreen should be added. The windscreen should be higher than the top of the opening in the back of the grill, with a minimum clearance of 76mm for non-combustibles, or 457mm for combustibles, from the back of the grill

Locating Built-in Clearances

This appliance shall only be used in an above ground open-air situation with natural ventilation, without stagnant areas, where gas leakage and products of combustion are rapidly dispersed by wind and natural convection.

Any outdoor enclosure in which the appliance is used shall comply with one of the following:

- An enclosure with walls on all sides, but at least one premanent opening at ground level and no overhead cover. See Fig. 01d.
- Within a partial enclosure that includes an overhead cover and no more than two walls. See Figs. 01e & 01f.
- Within a partial enclosure that includes an overhead cover and more than two walls, the following shall apply:
  - At least 25% of the total wall area is completely open and
  - At least 30% of the remaining wall area is open and unrestricted. See Figs. 01g & 01h.
- In the case of balconies, at least 20% of the total of the side, back and front wall areas shall be and remain open and unrestricted.

The following diagrams provide a diagrammatic representation of outdoor areas. Rectangular areas have been used in these figures - the same principles apply to any other shaped area.

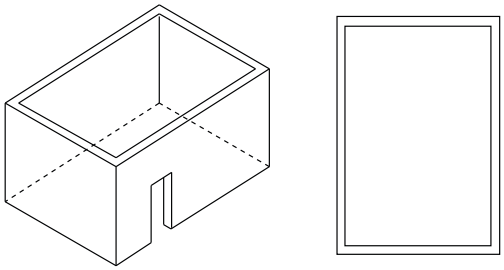

Fig. 01d - Enclosure with walls on all sides but no overhead cover.

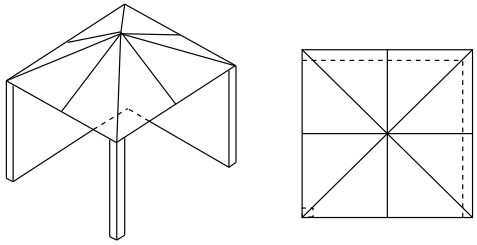

Fig. 01e - Partial enclosure with overhead cover and no more than two walls.

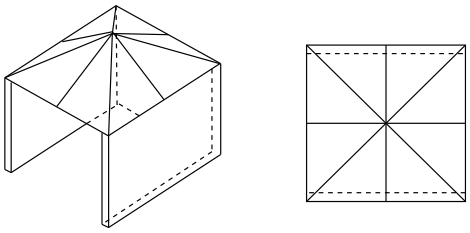

Fig. 01f - Partial enclosure with no overhead cover and no more than two walls.

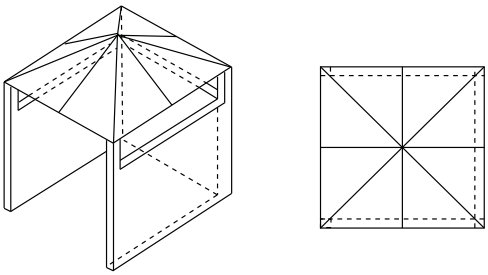

Fig. 01g - Open side at least 25% of total wall area. 30% or more in total of the remaining wall area is open and unrestricted.

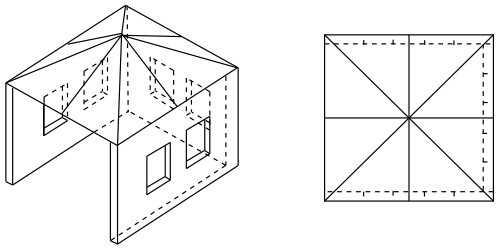

Fig. 01h - Open side at least 25% of total wall area. 30% or more in total of the remaining wall area is open and unrestricted.

Locating Built-in Clearances

Clearances to non-combustible construction*
A minimum of 76mm clearance from the back of the grill to non-combustible construction is required for the purpose of allowing the hood to open fully. It is desirable to allow at least 153mm rear and side clearance to non-combustible construction above the cooking surface for counter space. If you'll be using the rotisserie option, at least 180mm side clearance is essential for the rotisserie motor space. The grill can be placed directly adjacent to non-combustible construction below the cooking surface (Fig. 02).

Note: if intending to use the rotisserie, the minimum clearance will be from the rotisserie motor instead of the side of the grill.

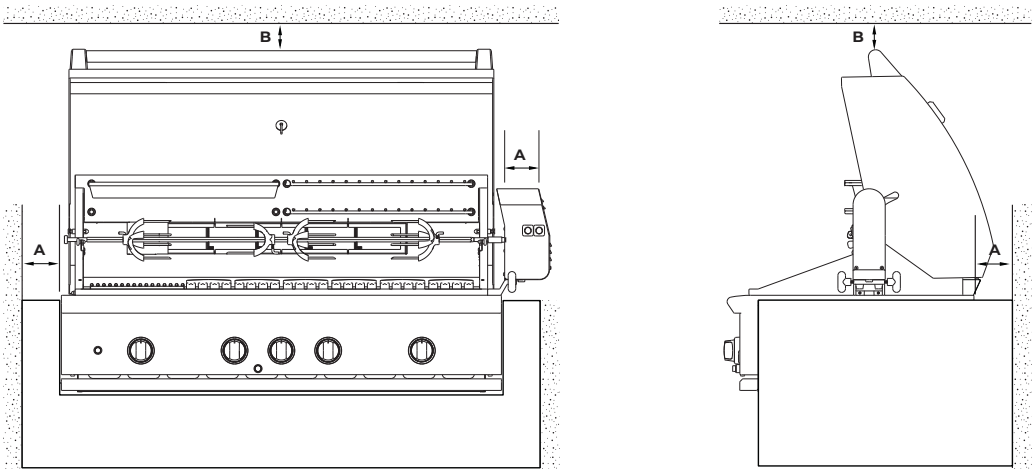

FIG. 02

PRODUCT DIMENSIONS		MM
A	Minimum distance from non-combustible surface to grill	76
B	Minimum clearance from non-combustible surface from top of grill lid while open	610

= NON-COMBUSTIBLE SURFACE

*DEFINITION OF NON-COMBUSTIBLE MATERIAL - Material which is not capable of being ignited and burned, such as materials consisting entirely of, or a combination of steel, iron, brick tile, concrete, slate, and plaster.

General
The grill is designed for easy placement into built-in masonry enclosures. For non-combustible applications the grill drops into the opening shown in Fig. 05 and hangs from its side flanges. A deck is not required to support it from the bottom. When using the insulated jacket in a combustible enclosure application, see the Fig. 06. The insulation jacket assembly must be supported from the bottom by a ledge on each side and back or a solid deck.

A spirit level should be used to ensure that the unit is level both front-to-back and side-to-side. If it is not level, burner combustion may be erratic or the unit may not function efficiently for grease flow. If the floor is uneven, re-leveling may be required whenever a freestanding unit is moved.

IMPORTANT!

- **Failure to maintain required clearances creates a fire hazard that may result in property damage or serious personal injury.**
- **The grill is designed to function in an open area. Recommended minimum clearances should be** maintained to all surfaces (combustible and non-combustible) for optimum performance. Non-combustible material within the minimum clearance area could result in discoloration or deterioration.
- If a non- combustible material such as stucco is covering a combustible material such as wood, the minimum clearance distance needs to be considered for wood. The presence of a non-combustible material inside the clearance zone does not eliminate the minimum clearance zone to combustible material.

Locating Built-in Clearances

Clearances to combustible construction**
Minimum of 450mm from the sides and rear of grill must be maintained to adjacent vertical combustible construction, above the counter top level. Intense heat, and large volumes of smoke will exhaust from the rear of the grill (Fig. 01b). This may discolor or damage unprotected areas. Do not install under unprotected combustible construction without using a fire safe ventilation system.

A 450mm minimum clearance must be maintained under the counter top to combustible construction. The clearance can be modified by a use of an insulated jacket.

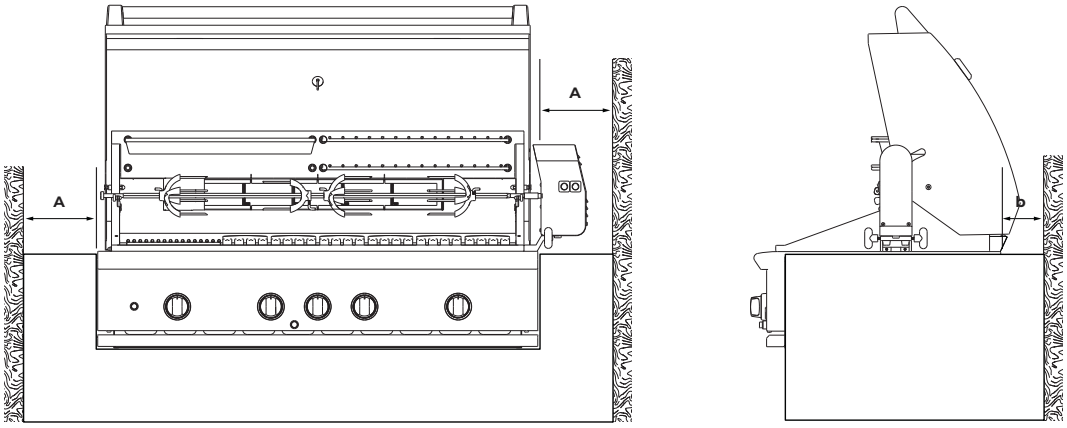

FIG. 03

PRODUCT DIMENSIONS		MM
A	Minimum distance from combustible surface to grill	450
b	Minimum distance from combustible surface to grill at rear	310

= COMBUSTIBLE SURFACE

= NON-COMBUSTIBLE SURFACE

**DEFINITION OF COMBUSTIBLE MATERIAL - Any materials of a building structure or decorative structure made of wood, compressed paper, plant fibers, vinyl/plastic or other materials that are capable of transferring heat or being ignited and burned. Such material shall be considered combustible even though flame-proofed, fire-retardant treated or surface-painted, or plastered.

IMPORTANT!

It is recommended that a minimum of two 311 x 311mm vents be provided in order to safely dissipate unburned gas vapors in the event of a gas supply leak. These are to be located on each side of the enclosure and within 127mm of the top.

Insulated jacket
If the grill is to be placed into a combustible enclosure, an approved insulated jacket is necessary. Insulated jackets are available from your dealer. Use only the DCS by Fisher & Paykel insulated jacket which has specifically been designed and tested for this purpose. Review the detail drawing shown (Fig. 06) and take into account the provisions shown for gas line hook-up clearance in the right rear corner. It is required that ventilation holes are provided in the enclosure to eliminate the potential build-up of gas in the event of a gas leak. The supporting ledges or deck must be level and flat and strong enough to support the grill and insulated jacket. The counter should also be level.

IMPORTANT!

Locating Built-in Clearances

Clearances to protected combustible construction***
A minimum of 305mm clearance from the sides and rear of grill must be maintained to adjacent vertical protected combustible construction. Intense heat, and large volumes of smoke will exhaust from the rear of the grill. This may discolor or damage unprotected areas. The 305mm includes 102mm min. non-combustible material plus an additional 203mm min. clearance between the grill and the protected combustible construction. This can be achieved by brick or concrete (Fig. 04a) or a metal stud finished with non-combustible substrate (Fig. 04b).

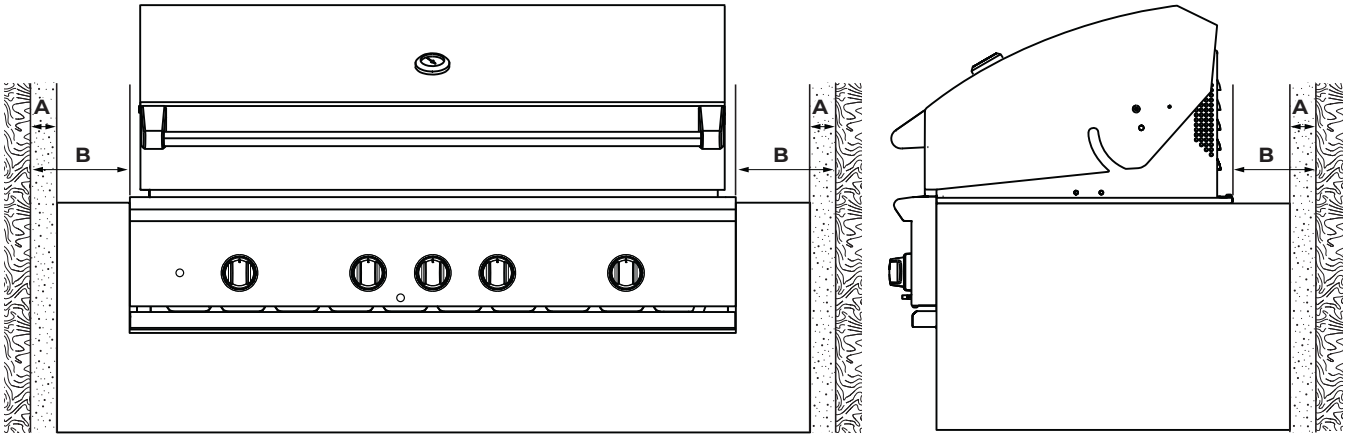

FIG. 04a

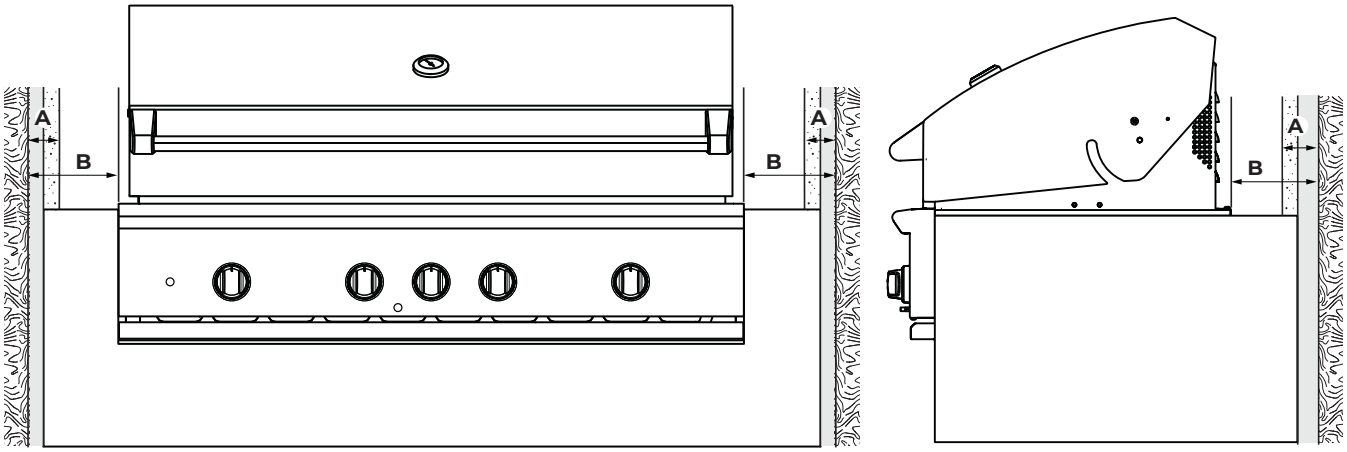

FIG. 04b

PRODUCT DIMENSIONS		MM
A	Minimum non-combustible surface width	102
B	Minimum distance from combustible surface to grill	305

= NON-COMBUSTIBLE SURFACE

= COMBUSTIBLE SURFACE

= METAL STUD

***DEFINITION OF PROTECTED COMBUSTIBLE SURFACE - A wall of non-combustible material in front a wall of combustible material, to act as a barrier. For definitions of non-combustible and combustible material, please refer to previous pages.

Built-in Construction Details

Standard layout for non-combustible cavity

IMPORTANT!

If installing the grill into a non-combustible enclosure, all combustible construction must still be outside the 450mm clearance zone. If your island is made of stucco over the top of wooden studs, the wood cannot be inside the 450mm clearance zone to combustible, even though the stucco is what is touching the grill area.

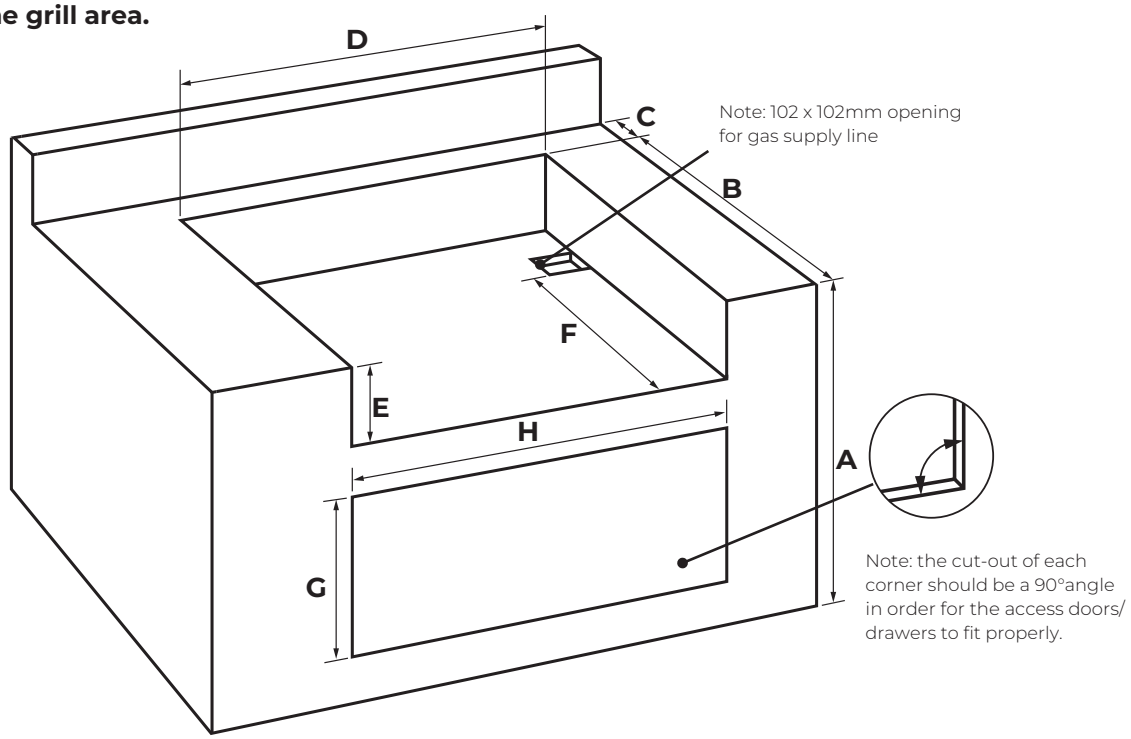

FIG. 05

CAVITY DIMENSIONS		BE1-48RCI	BE1-36RCI
		mm	mm
A	Maximum height of enclosure shell	902	902
B	Depth of enclosure shell	578	578
C	Minimum depth for hood swing	95	95
D	Width of enclosure cavity	1162	876
E	Height of enclosure cavity	257	257
f	Depth to gas supply opening	470	470
G	Height of opening for access doors/drawers	508	508
H	Width of opening for access doors/drawers	1168	864

Ventilation options

Option 1 – Perforations, uniformly distributed over the height of the enclosure

- The total free area must be equal to at least 25% of the side wall.

Option 2 – Separate openings at high and low levels

- The total free area at a high level must equal at least 20,000mm ^{2} and sit within 125mm of the top of the cylinder compartment.
- The total free area at a low level must equal at least 20,000mm ^{2} and a minimum of 25% of this area must sit within 15mm of the base of the cylinder compartment. The total free area must also sit within 125mm of the base of the cylinder compartment.
- The openings cannot be obstructed by the cylinder(s).

Built-in Construction Details

Standard layout for cavity including insulated jacket

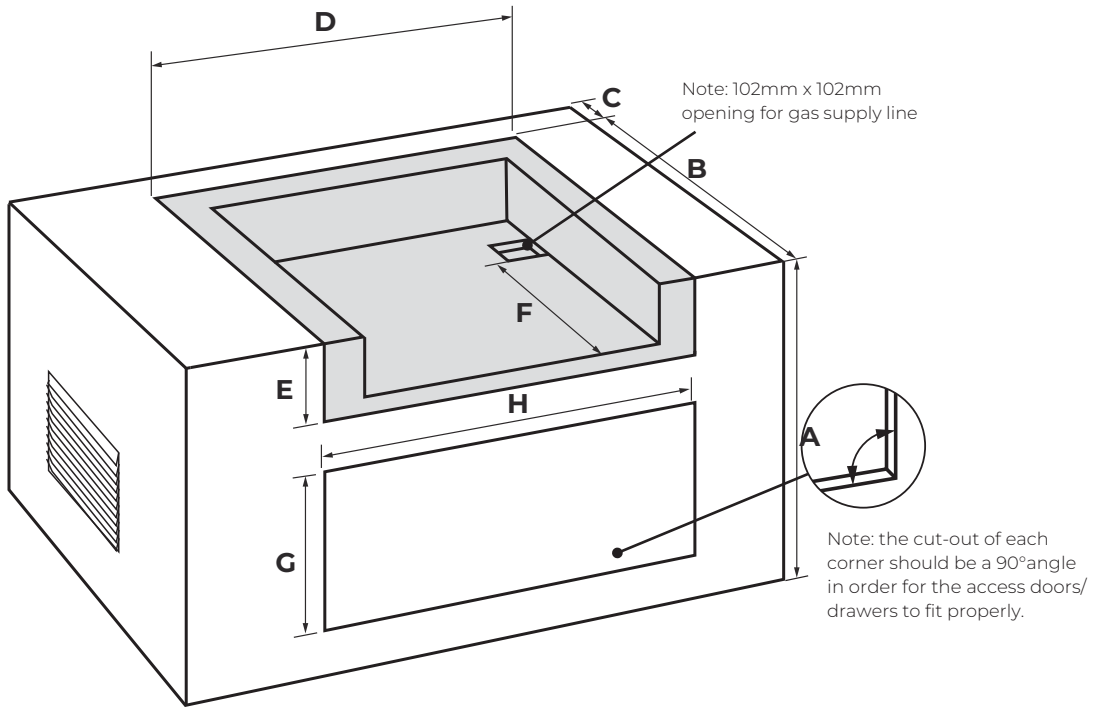

FIG. 06

CAVITY DIMENSIONS		BE1-48R	BE1-36R
		mm	mm
A	Maximum height of enclosure shell	902	902
B	Depth of enclosure shell	578	578
C	Minimum depth for hood swing	95	95
D	Width of enclosure cavity	1318	1029
E	Height of enclosure cavity	283	283
f	Depth to gas supply opening	470	1470
G	Height of opening for access doors/drawers	508	508
H	Width of opening for access doors/drawers	1168	864

ACCESS DOORS MODEL NUMBER	ACCESS DRAWERS MODEL NUMBER	CAVITY WIDTH	CAVITY HEIGHT
		mm	mm
ADN1-20x48	ADR2-48	1168	508
ADN1-20x36	ADR2-36	864	508
ADN1-20x30	ADR2-30	711	508
ADN1-20x24	ADR2-24	559	508

To order access drawers or doors, please visit www.fisherpaykel.com/nz/ or www.fisherpaykel.com/au/ for further details.

BE1-36RCI	70167
BE1-48RCI	70172

Gas Hook-up

Gas requirements

Verify the type of gas supply to be used, either Natural or LPG, and make sure the marking on the appliance rating plate agrees with that of the supply. The rating plate is located on the underside of the drip tray. Never connect an unregulated gas line to the appliance. You must use a gas regulator even if the supply is controlled.

An installer-supplied gas shut-off valve must be installed in an easily accessible location. All installer supplied parts must conform to local codes, or in the absence of local codes, the installation must comply with the the requirements of the current version of AS/NZS 5601.1 and any other applicable statutory regulations.

All pipe sealants must be an approved type and resistant to the actions of LPG gases. Never use pipe sealant on flare fittings. All gas connections should be made by a qualified technician and in accordance with local codes and ordinances. In the absence of local codes, the installation must comply with the the requirements of the current version of AS/NZS 5601.1 and any other applicable statutory regulations. Gas conversion kits are available from Customer care. When ordering gas conversion kits, have the model number, and the type of gas (natural or LPG) from your grill.

Total gas consumption of the grill with all burners on HI

The appliance and its individual shut-off valve must be disconnected from the gas supply piping system during any pressure testing of that system at test pressures in excess of 3.5 kPa (1/2 PSIG). The appliance must be isolated from the gas supply piping system by closing its individual manual shut-off valve during any pressure testing of the gas supply piping system at test pressures equal to or less than 3.5 kPa (1/2 PSIG).

All piping and hoses to run away from the product and never against the product surfaces.

BURNER	ULPG INPUT RATES	NG INPUT RATES
BE1-36RCI		
Total rating	92.5 MJ/hr	94.0 MJ/hr
Grill (U)	25.5 MJ/hr	27.0 MJ/hr
Rotisserie	16.5 MJ/hr	14.0 MJ/hr
Sear	25.0 MJ/hr	26.0 MJ/hr
BE1-48RCI		
Total rating	121.0 MJ/hr	123.0 MJ/hr
Grill	25.5 MJ/hr	27.0 MJ/hr
Rotisserie	19.5 MJ/hr	16.0 MJ/hr
Sear	25.0 MJ/hr	26.0 MJ/hr

Natural gas built-in hook-up
(This should be performed by a technician only)

Where threads are used for connection to the appliance, all union mating surfaces shall be compatible and comply with AS ISO 7.1 or AS 1722.2

Connection: Grills set for use with Natural gas come with an NG regulator assembly which has a short section of hose and is already connected to the appliance. The regulator has a test point. A certified gas fitter needs to connect the appliance to the gas supply. Shut-off valve and gas fittings for rigid piping connection are not supplied with the appliance - they must be provided by the installer.

For built-in installation with connection to Natural gas:

1. Plumb from the female 1/2” BSP side of the regulator to gas supply.
2. Do leak test.
3. After the connection is completed, turn the shut-off valve on and turn the burner control valves on the unit to the “HI” position for about 20 seconds to allow the air in the system to purge, turn valves off and wait five minutes before attempting to light the burners.

For units mounted on a mobile cart and being connected to a reticulated supply of Natural gas, and where a quick-connect device is used, ensure that:

- The quick-connect device is certified to AS4627 and the gas hose assembly is certified to AS/NZS 1869.
- Limited flexibility connectors is certified to AS 4631.
- The gas fittings and hose assembly are compatible with the gas supply system and is able to deliver the maximum gas rating requirement of the DCS Outdoor Grill.
- All gas installation works are carried out in accordance the the AS/NZS Gas Installations Standard AS/NZS 5601 and other applicable Standards.
- Verify that connections are leak tested.

Gas Hook-up

LP cart hook-up
Grills orificed for use with combustible gas come equipped with a high capacity hose/regulator assembly for connection to a standard 9 kg LPG Type 27 cylinder (Type 1). Only use a 9kg LPG gas tank. The tank is not included. The grill system is leak tested, do not remove the Regulator/Hose assembly from the grill during cart installation.

Connection: 1/2" NPT male with a 3/8" Flare adapter (included). LPG Hose with a Type 27 fitting and fittings are included. Operating pressure: 2.75 kPa. Maximum supply pressure: 1750 kPa.

To connect the LPG regulator/hose assembly to the cylinder/valve assembly, first make sure the main valve on the cylinder is completely closed. You should always turn off the LPG cylinder main valve (Fig. 07) after each use and during transport of the cylinder or unit. Insert the cylinder valve inside the large diameter wheel and turn the wheel clockwise by hand until the connection tightens up. Do not overtighten the wheel. A good connection can be made without the use of tools. Turn the main cylinder valve on and turn the burner control valves on the unit to the "HI" position for about 20 seconds to allow the air in the system to purge, turn valves off and wait five minutes before attempting to light the burners.

To disconnect the regulator from the cylinder, first make sure the main cylinder valve is turned off. Grasp the large diameter wheel and turn counterclockwise until the inlet will disengage. The inlet will then disengage. Remove the inlet from the cylinder valve opening if it has not already done so when it disengaged. Your local LPG filling station should be equipped with the proper equipment to fill your cylinder.

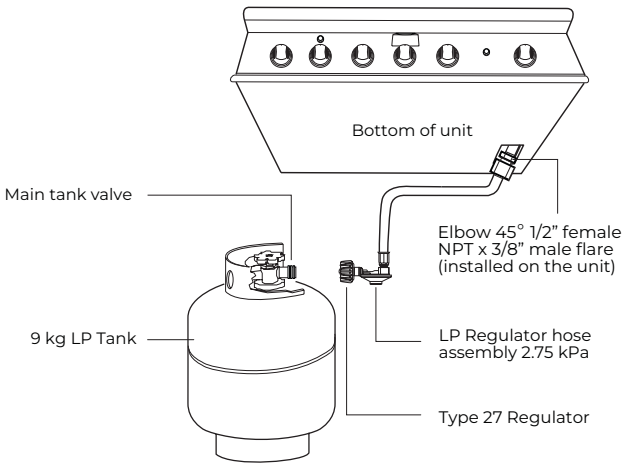

FIG. 07 LPG Gas

IMPORTANT!

- **Before connecting LP tank to regulator, check that all grill burners and rotisserie valves are in the OFF position and open grill hood.**
- **Do not place the Grill directly on the ground or any other flat surface without support. This will prevent damaging the regulator/hose assembly by the weight of the grill.**
- **Check the hose, regulator and connectors for damage. Look for cracks, abrasions, brittleness, holes, dents and nicks.**
- **Do not attempt to remove, repair, or replace the regulator/hose assembly by yourself. It must be done by a qualified licensed technician only.**

LPG cylinder requirements:
A dented or rusty LPG cylinder may be hazardous and should be checked by your LPG supplier. The cylinder that is used must have a collar to protect the cylinder valve. Never use a cylinder with a damaged valve. Always check for leaks after every LPG cylinder change. The LPG gas cylinder must conform to AS2030.1. Do not change the regulator/hose assembly from that supplied with the unit. The cylinder must be provided with a shut-off valve terminating in an LPG gas supply cylinder valve outlet specified, as applicable, for Type 27 connection. If the appliance is stored indoors, the cylinder must be disconnected and removed from the appliance. Cylinders must be stored outdoors in a well-ventilated area out of the reach of children.

Note: when an LPG unit is being directly connected to an LPG house system, you must follow the Natural gas hook up guidelines. The installer must provide the proper gas regulator to reduce the gas flow to 2.75 kPa. The Grill comes with the LPG Regulator/Hose assembly installed at the factory. The assembly, along with the entire Grill system, is leak tested. Do not remove the Regulator/Hose assembly from the Grill during installation.

Gas hook-up

Natural gas hook-up

IMPORTANT!

Where the appliance is intended to be permanently connected to a reticulated supply of gas, the appliance inlet connection shall have a thread in accordance with AS ISO 7.1.

For Grills mounted on a mobile cart using a flexible hose to connect to a reticulated LPG or NG fixed outlet gas supply, a restraining device, chain or tether no longer than 80% of the flexible hose length must be fitted to prevent movement and accidental strain.

The tether must be fixed to within 50mm of the gas connection point. The flexible hose must not kink, crush, or twist (as required by the current version of AS/NZS 5601.1) in order to prevent tension on the flexible hose in case the cart should move during use. Quick connect devices should be certified to AS4627 and gas hose assemblies should be certified to AS/NZS 1869.

Operating pressure: 1 kPa Supply pressure: 1.25 kPa to 3.5 kPa. If in excess of 3.5 kPa, a step down regulator is required. Check with your local gas utility company or local codes for instructions on installing gas supply lines. Be sure to check on type and size of run (refer to the current version of AS/NZS 5601.1 for pipe sizing details), and how deep to bury the line. If the gas line is too small, the grill will not function properly. Any joint sealant used must be an approved type.

Checking the gas pressure

1 Turn off the gas supply.
2 Connect the pressure gauge to the pressure test point. This can be done by either removing the test point screw on the NG regulator or by removing one of the burners and measuring the test point pressure at the injector.
3 Once the gauge is in position, turn the gas supply on.
4 Ignite all grill burners and turn the knob to the “HI” position. Check that the reading measures 1.00 kPa for Natural gas. If not, adjust the regulator to obtain the stated pressure.
5 Once the pressure is set, switch off the burner, turn off the gas supply, and disconnect the pressure gauge.
6 Ensure the Grill is returned to its normal operating state. Replace the screw in the NG regulator, or replace the burner if it has been removed. Perform a gas leak check on all gas connections to make sure there are no gas leaks at the test point or at any point in the connection to the inlet manifold.

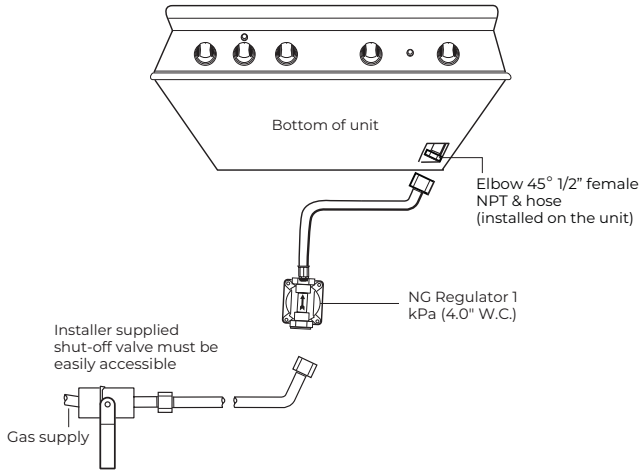

Fig. 08a - Connection with rigid piping

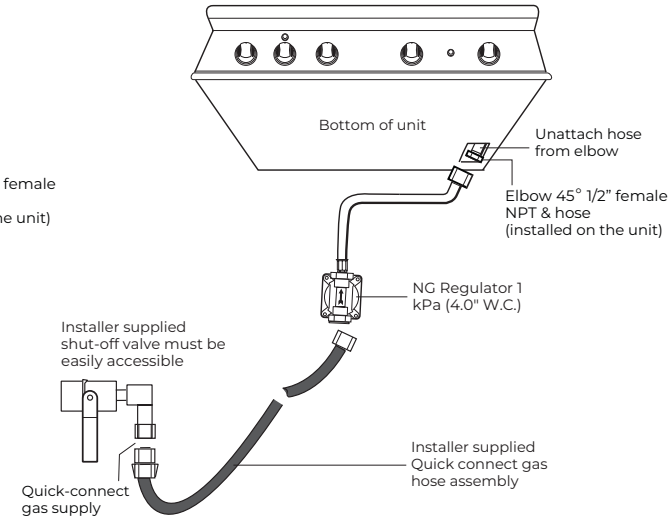

Fig. 08b - Connection using a special quick-connect flexible hose (for mobile cart-mounted grills being connected to a reticulated supply of Natural gas)

Gas hook-up

LP tank restraint for built in installation
If the grill is to be installed in a built-in application, then the grill must be installed in accordance with the built–in installation guidelines.

If you intend to operate your built-in grill on LPG gas utilising a minimum 9 kg cylinder, then the built-in LPG cylinder restraint must be installed prior to initial use of the grill. If you do not have one please contact DCS by Fisher & Paykel for information on obtaining one. See section 'Service' for contact details.

The following steps will illustrate how to properly locate and install the LPG cylinder restraint within the built-in enclosure.

IMPORTANT!

- **The grill comes with the LPG Regulator/Hose assembly installed at the factory. The assembly, along with the entire grill system, is leak tested.**
- **Do not remove the Regulator/Hose assembly from the grill during installation.**
- **Install the supplied CLIP HOSE 5/8 - 7/8 SS (LP units only).**
- **Whenever the LPG Regulator/Hose assembly is not connected to the LPG cylinder, the clip can be used to hold it to prevent the hose from getting pinched and to keep the inlet from getting contaminated or damaged.**

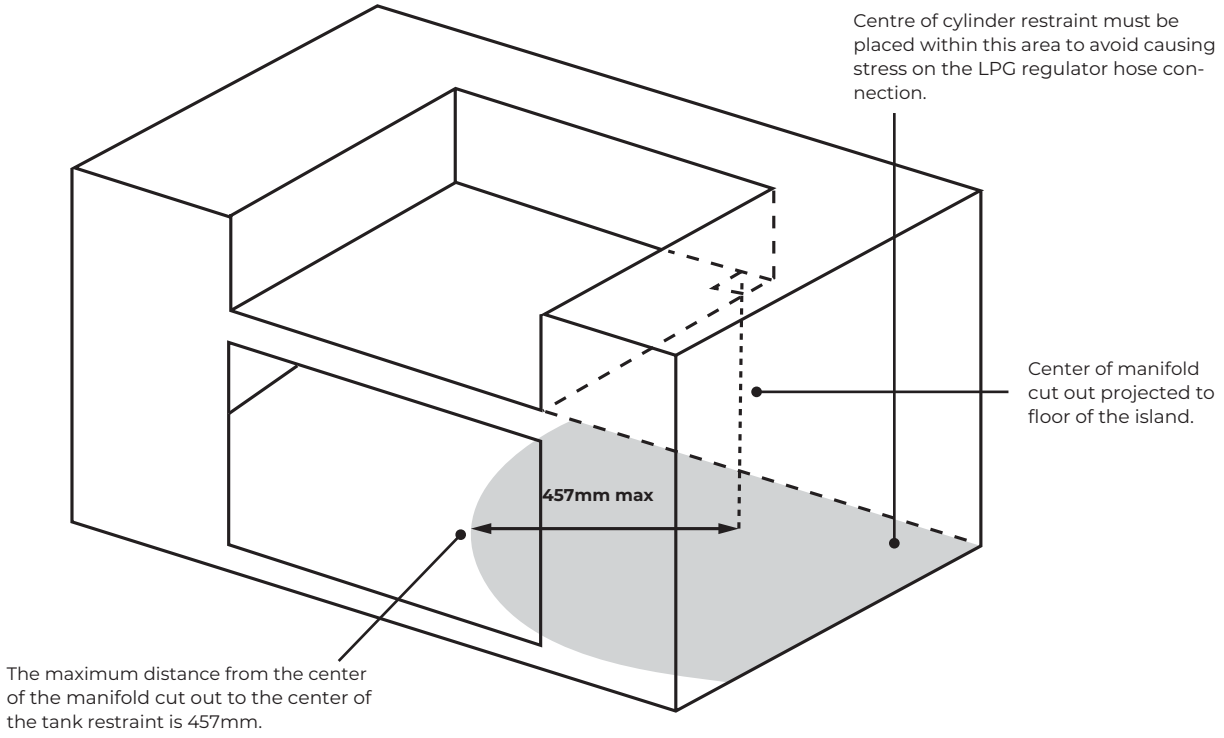

Fig. 09

Gas hook-up

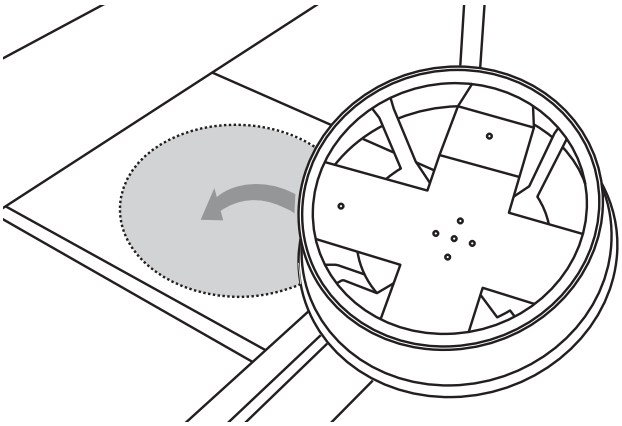

1 Place the tank restraint in the island and locate within the recommended area.

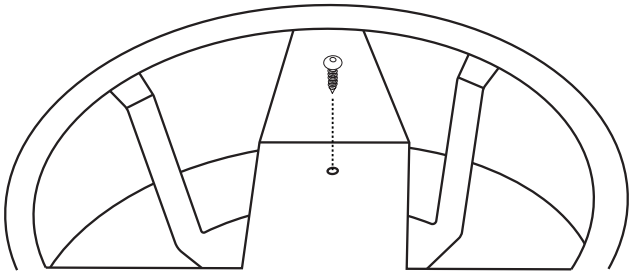

2 Once located, secure to the bottom of the island using all eight hole locations provided on the restraint. Wood screws can be used for wooden floors or 1/4 inch diameter anchor screws or bolts may be used if the floor is concrete or masonry.

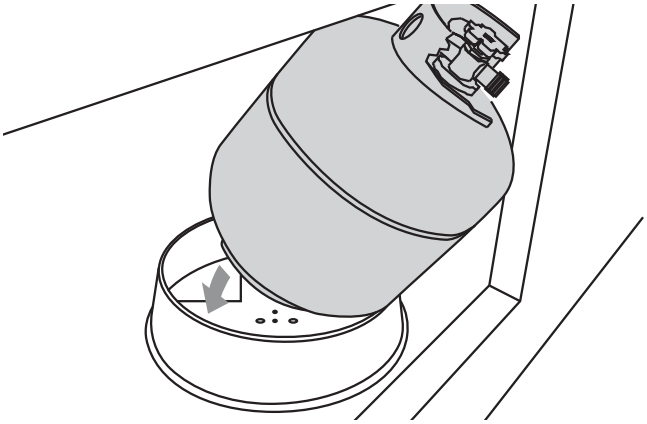

3 When secure, place the LP cylinder into the tank restraint making sure to seat the tank all the way down, securely affixing the tank in the restraint.

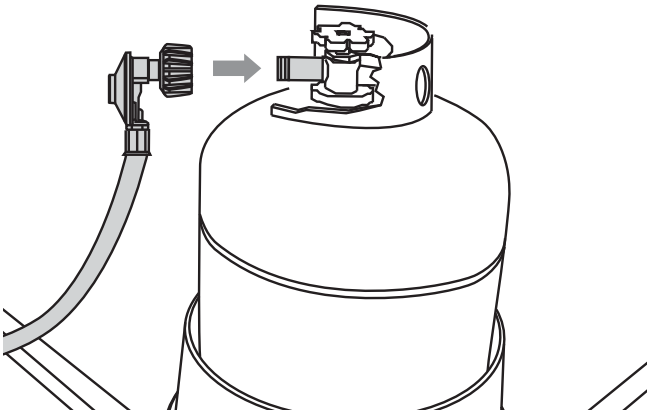

4 Attach the regulator hose assembly and operate the grill normally as described in the manual.

Leak Testing

IMPORTANT!

Gas leak testing must be carried out by a qualified technician.

General
Regularly check the whole system for leaks, or immediately check if the smell of gas is detected.

Before Testing
Do not smoke while leak testing. Extinguish all open flames. Never leak test with an open flame.
Make a soap solution of one part liquid detergent and one part water. You will need a spray bottle, brush, or rag to apply the solution to the fittings. For LP units, check with a full cylinder.

To Test
Make sure all control valves are in the “OFF” position. Turn the gas supply “ON”. Check all connections from the supply line, or LP cylinder. Apply the soap solution around the connection, tubing and end of the manifold. Soap bubbles will appear where a leak is present. If a leak is present, immediately turn off gas supply, tighten any leaking connections, turn gas on, and recheck.

If you cannot stop a gas leak turn off the gas supply and call your local gas utility, or the dealer you purchased the appliance from. Only those parts recommended by the manufacturer should be used on the grill. Substitution can void the warranty.

IMPORTANT!

- **Do not use the grill until all connections have been checked and do not leak.**
- **Check all gas supply fittings for leaks before each use. Keep a spray bottle of soapy water near the gas supply shut-off valve. Spray all the fittings, bubbles indicate leaks**

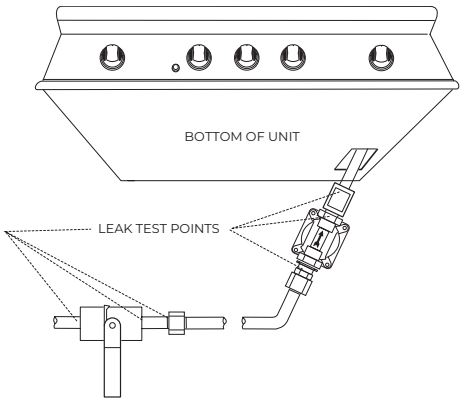

FIG. 10 Nat. Gas and bulk LPG

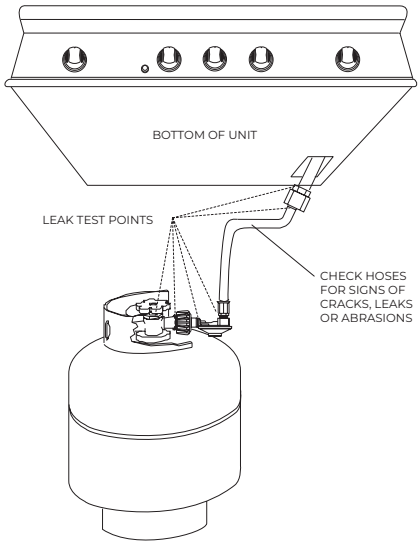

FIG. 11 LP Gas - cart

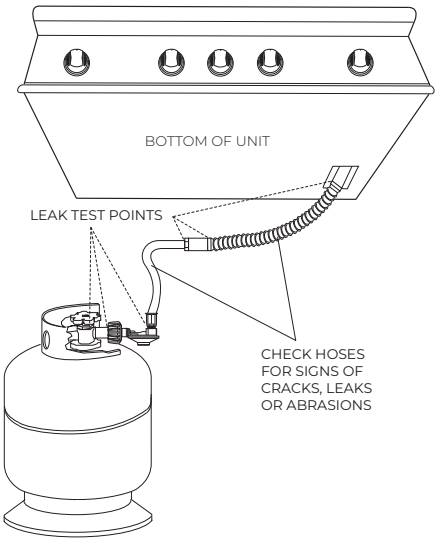

FIG. 12 LP Gas - built-in

Electrical Connection

All units are supplied with a 12V power transformer to operate the products ignition and dial illumination features. The transformer is sealed in a box with an attached power supply cord.

Use only a Residual-Current Device (RCD) protected circuit with this product.

An outdoor 230/240VAC 10A RCD electrical outlet should be installed by a qualified electrician either inside the island enclosure for built-in units, or near the location where a free-standing unit will be used. For built-in products, the supplied 12V transformer should be connected during installation.

Installation
The transformer must be secured below the product in a dry location away from any excessive heat. Be sure to provide adequate access to facilitate service if the transformer or connections require maintenance. For 2-pin connector models, multiple DCS Series 9 products may be connected to a single transformer by purchasing and installing a DCS approved power splitter.

Dial halos
When a dial is in use, an orange halo around that dial will illuminate. This will change from orange to white if the dial is turned to off but another dial remains active. If all dials are turned OFF, all halos will turn off. Multiple DCS Series 9 products may be linked together to allow for cross-product halo illumination.

Linking 3-pin connector models
An approved DCS interconnectivity kit is required to enable this functionality.

Linking 2-pin connector models
An approved DCS retro-fit kit and the interconnectivity kit are required to enable this functionality.

The DCS retro-fit kit, interconnectivity kit and power splitter can be purchased separately from your local DCS dealer. The retro-fit kit must be installed by a Fisher & Paykel trained and supported service technician.

3-pin connector models

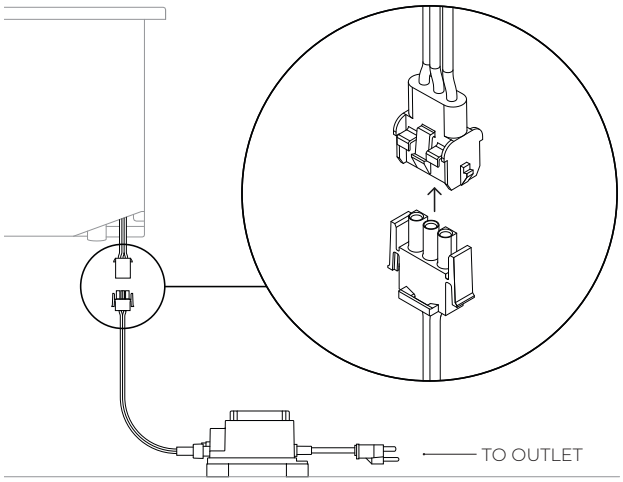

3-PIN MODELS - PROFILE VIEW

2-pin connector models

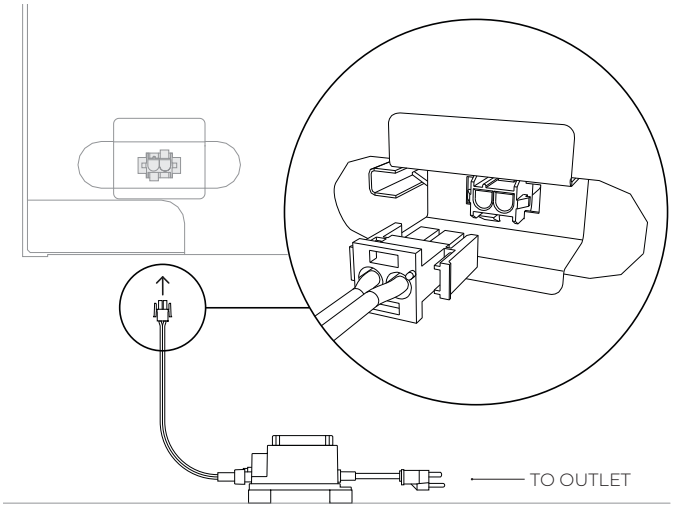

2-PIN MODELS - REAR VIEW

FIG. 13

If the ignition or dial halos fail to operate, a connection may have come loose during installation or the RCD may have tripped requiring a reset. Refer to the troubleshooting section further guidance.

Burner Adjustment

IMPORTANT!

Before lighting, inspect the gas supply piping or hose prior to turning the gas "on". If there is evidence of cuts, wear, or abrasion, it must be replaced prior to use.

U-burner burner air adjustment (Natural Gas only)
Each grill burner is tested and adjusted at the factory prior to shipment; however, variations in the local gas supply may make it necessary to adjust the burners. The flames of the burners (except the rotisserie burner) should be visually checked and compared to that of the drawing in Fig.14. Flames should be blue and stable with no yellow tips, excessive noise or lifting. If any of these conditions exist, check if the air shutter or burner ports are blocked by dirt, debris, spider webs, etc. If cleaning the burner ports and air shutter does not improve performance, you can alter the air shutter adjustment. The amount of air which enters a burner is governed by a metal cup at the inlet of the burner called an air shutter. It is locked in place by a screw which must be loosened prior to lighting the burner for adjustment.

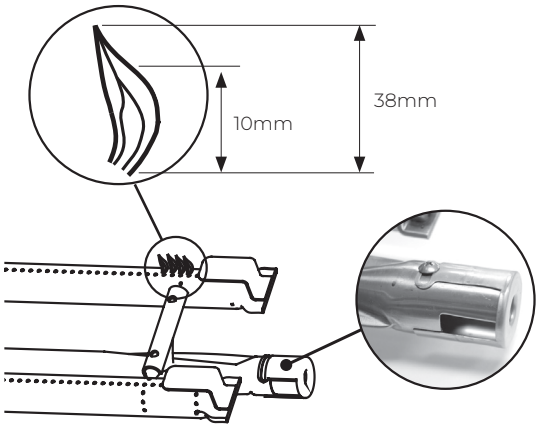

FIG. 14

U-burner flame height adjustment
Before beginning, ensure the grill is OFF and cool. To access the grill burner air shutters, first remove the grates and radiants from the firebox, then remove the grill burner using instructions shown on page 42. With a screw driver, loosen the lock screw on the face of the air shutter slightly so that the air shutter can be adjusted.

To adjust

1 Be careful as the burner may be very hot.
2 If the flame is yellow, indicating insufficient air, turn the air shutter counter-clockwise to allow more air to the burner.
3 If the flame is noisy and tends to lift away from the burner, indicating too much air, turn the air shutter clockwise.

Note: reinstall the U-burner, ensuring it is level. Light the burner and check the flame. If the color of the flame is blue and the height is stable, remove the burner and tighten the air shutter screw. If the flames show instability or an inconsistent color, repeat the above procedure to readjust the air shutter.

Low flame setting adjustment
The valves on the grill feature an adjustable low setting. Due to fluctuations in gas pressure, heating value or gas conversion, you may feel it necessary to increase or decrease gas flow in the low position. We do not recommend adjusting the infrared rotisserie burner.

To adjust

1 Light the burner.
2 Turn the control knob to the lowest setting (counter-clockwise).
3 Remove the knob.
4 While holding the valve shaft with pliers, insert a thin, flat tipped screwdriver into the shaft and while viewing the burner adjust to a minimum stable flame. For sear burners, a slight flutter will be present before the flame becomes unstable.

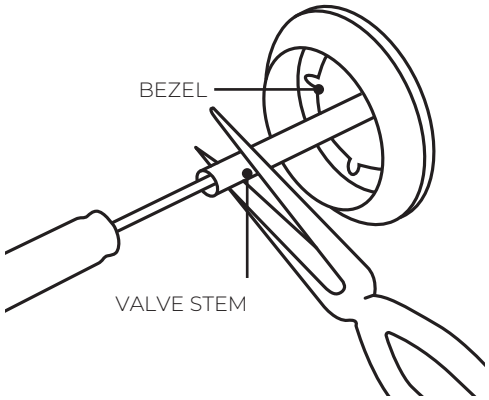

FIG. 15

Radiant Tray Assembly

Natural Gas

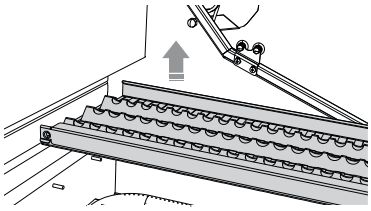

1 Locate the radiant in the unit.

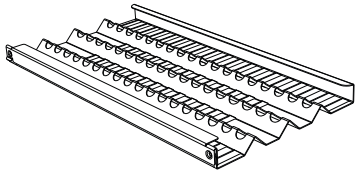

2 Unpack ceramic rods and remove radiant from the unit .

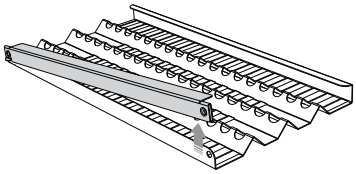

3 Unlock radiant end cap by pushing it up with two fingers.

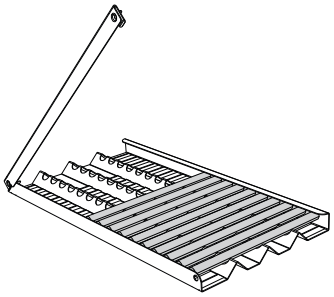

4 Place the 18 ceramic rods onto the radiant.

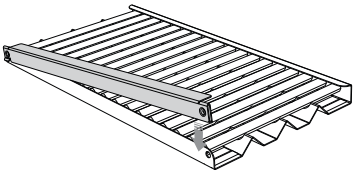

5 Lock radiant end cap.

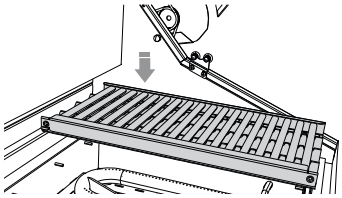

6 Place the assembled radiant into the unit.

LPG

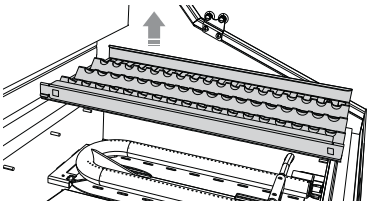

1 Locate the radiant in the unit.

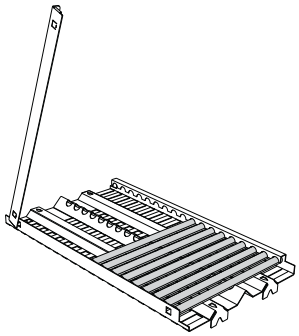

2 Place the 18 ceramic rods onto the radiant.

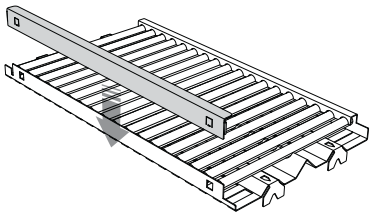

3 Fit and push down the end cap over the radiant tray edge to secure.

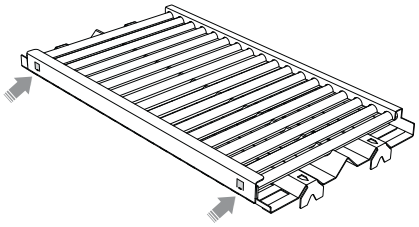

4 Lock radiant end cap by pushing the two tabs into the radiant tray.

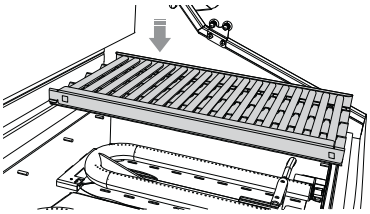

5 Place the assembled radiant into the unit.

If a ceramic rod breaks

1 Unlock the end cap by pushing the two tabs outward. This can be done by inserting a thin rigid tool, e.g. screwdriver, between the ceramic rods from the inner side of the radiant tray (LPG). For natural gas, push the radiant tray up with two fingers.
2 Replace broken ceramic rod.
3 Lock radiant tray end cap.

To order a replacement ceramic rod, please visit www.fisherpaykel.com

INSTALLATION

Installer Checklist

- ☐ Specified clearances maintained to combustibles
- ☐ Verified proper enclosure ventilation
- ☐ All internal packaging and any adhesive residue removed. To remove stubborn residue, use rubbing alcohol or a commercially available adhesive remover
- ☐ Removed shipping bracket
- ☐ Knobs turn freely, bezels centered
- ☐ Halo lighting is functioning correctly
- ☐ Each burner lights satisfactorily - individually or with adjacent burner lit
- ☐ Air shutters adjusted
- ☐ Low flame setting satisfactory
- ☐ Drip pan in place properly and sliding freely
- ☐ Pressure regulator connected and set for 4.0” C.E. Natural, 11.0” C.E. LP gas
- ☐ Manual shut-off valve installed and accessible
- ☐ Unit tested and free of leaks
- ☐ User informed of gas supply shut-off valve location
- ☐ All radiant trays are assembled and put in place
- ☐ Check match lighting
- ☐ Internal lighting is functioning correctly
- ☐ Transformer is tidy and mounted securely, in a suitable location
- ☐ Sear burner models: ensure mesh is in place

Please leave these instructions with the user.

User, please retain these instructions for future reference.

If any of the listed items are missing, contact Customer Care. See section ‘Service’ for contact details. Please be prepared with your Model #, Serial # and description of item(s) that are missing.

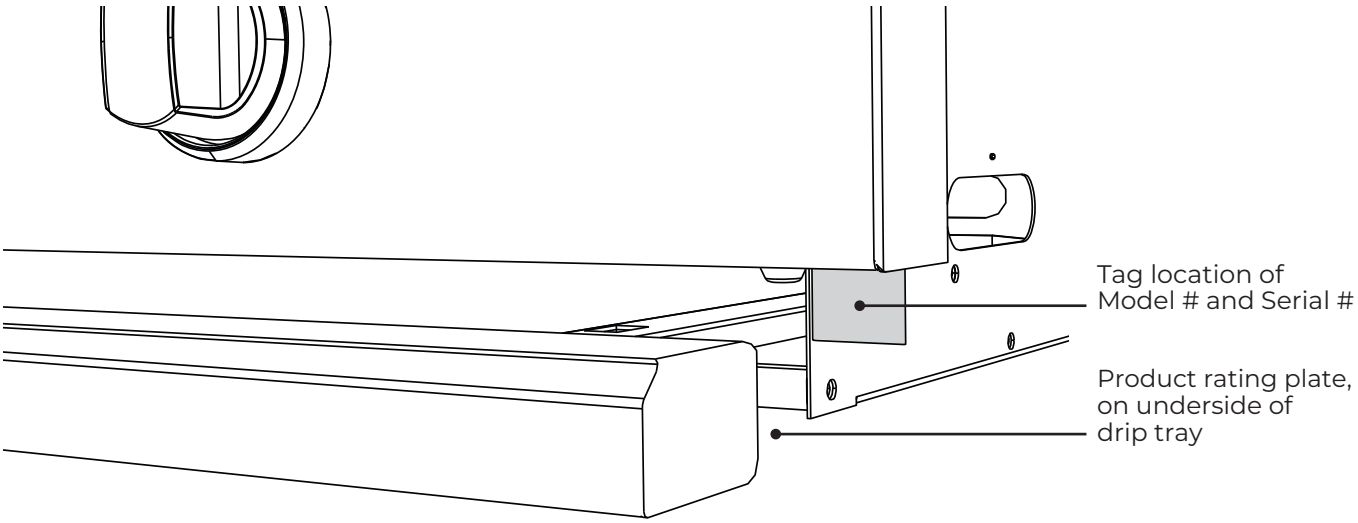

IMPORTANT!

Lighting Instructions

Lighting Instructions can also be found in the grill head on the drip tray handle located underneath the front control panel. Slide out the drip tray to make all instructions visible.

Grill lighting instructions

IMPORTANT!

- **Open the grill hood before lighting. Turn all knobs to “OFF”. Turn the main gas supply on. If you smell gas, shut-off gas supply and call for customer care. Only light one burner at a time.**

Pushing in on the burner knob will activate the Grill Igniter, and then turning the knob from the “OFF” position will allow the flow of gas to the burner.

The Grill Igniter will glow orange, but there will be no clicking sound during ignition. Push in and hold the burner knob for two seconds. Verify that the Grill ignitor is glowing. Turn the knob counterclockwise. Release when the burner lights. If the burner does not light in four to five seconds, turn knob "OFF" and wait five minutes before trying again so any accumulated gas may dissipate.

Match lighting
If the burner will not light after several attempts, then the burner can be match lit. If you have attempted to light the burner with the igniter, allow five minutes for any accumulated gas to dissipate.

U-burners
Keep your face as far away from the grill as possible while manually igniting. To manually ignite, light a butane lighter before pushing and turning the control knob to "SEAR" of the rightmost burner. Wait 2 seconds for gas to prime manual ignition tube, then move lighter to 10mm in front and a little below the hole located on the top right of the burner (Fig. 16a). If the burner does not light in four to five seconds, turn knob off, wait five minutes and try again.

Sear burner
Keep your face as far away from the grill as possible. To light, place a lit butane lighter or match (match holder provided and located in drip tray) into the gap between the grates until the flame touches the mesh. (Fig.16b). Push and turn the knob to “MAX”. If the burner does not light in four to five seconds, turn knob off, wait five minutes and try again.

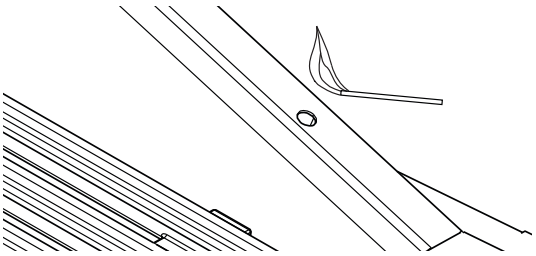

FIG. 16a

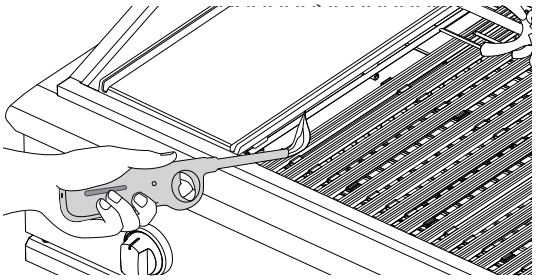

FIG. 16b

Refer to the Troubleshooting section of the user guide if you encounter any difficulties lighting your grill. See the Quick Start Guide for how to use the griddle.

Resetting the flow control

IMPORTANT!

Failure to follow the steps in the order shown may cause the Flow Limiting Device to activate resulting in extremely low gas flow and irregular operation

Improper lighting procedures can cause the LP tank flow control to activate resulting in reduced heat output. If this is suspected the flow control will need to be reset.

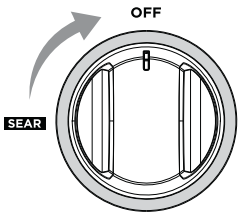

1 All knobs must be in the OFF position.

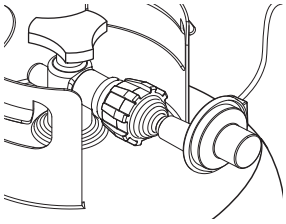

2 Attach regulator hose assembly to the tank.

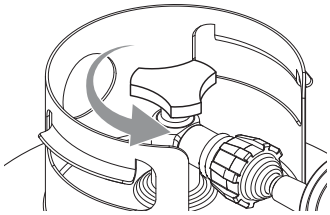

3 Open the LP tank valve. (Two full turns min).

Grilling

Each grill section consists of a large stainless steel burner, a series of ceramic rods encased in a stainless steel radiant and a stainless steel heat retaining grate. Below the burners there is a stainless steel heat shield which reflects usable heat upward into the cooking area and reduces temperatures of the drip pan below. Above the burners are stainless steel radiants which encase the ceramic rods and protect the grill burner ports from blockage (Fig. 17a).

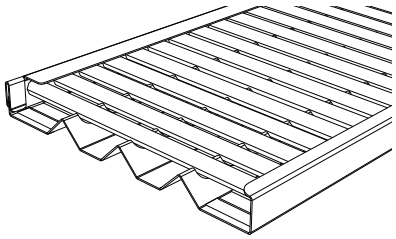

FIG. 17a

The grill is supplied with radiant ceramic rods. The ceramic rods have the thermal mass to capture heat as it rises from the grill burners. Flare ups are controlled because the radiant ceramic rods get hot & vaporise majority of food drips that cause flare ups. The intense heat produced by this system allows for production of true grilled flavours.

Sear burner

The sear burner section consists of a sear burner, a wire mesh, and wire grate. On the right side of the sear burner is a removable stainless steel wall to allow cleaning. (Fig. 17b).

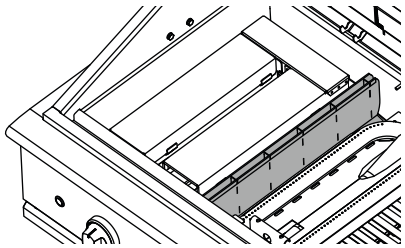

FIG. 17b

The wire mesh on the sear burner is designed to protect the ceramic tiles from food debris which may block the pores in the tiles. Most grease will vaporise on contact with the hot mesh and tiles.

When using the sear burner, the sear plate must be installed on the grate.

Direct/indirect cooking notes

Direct cooking involves placing food on grates over lighted burners. Use this method for foods that take less than 20 minutes to cook or to sear larger items at the start of the cooking process that will then be indirectly cooked to finish. Place items on the preheated surface and leave until they no longer stick. Never spray water on the grill or into grease. The patented Grease Management System™ reduces flare-ups by channeling grease away from the flame. Use a meat thermometer to achieve desired doneness and remove items 5 - 10 degrees below how you would like to enjoy them, as the resting period before carving or consuming will raise the temperature.

Indirect cooking method is a popular alternative to direct heat grilling. Indirect cooking uses heat from an adjacent heat source to cook food and, in many cases, reduces the possibility of overcooked or overly browned food. Foods most appropriate for indirect grilling include breads, thicker pieces of chicken or steaks. Indirect cooking involves placing the food to the side of or above the heat source instead of directly over the flame and then closing the grill top to create an oven effect. All the items you usually oven-roast can be grilled to perfection using indirect cooking. Preheat the burners surrounding the food to be cooked. Use your secondary cooking tray to hold food and add water or chicken broth to the tray to prevent the natural juices from burning or evaporating. When indirect cooking over the sear burner, make sure there is a tray in place to collect any drips.

Direct Heat Grilling

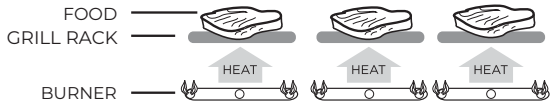

Indirect Heat Grilling

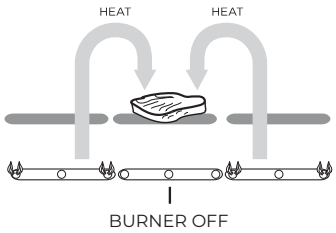

IMPORTANT!

- **Season your grates before first use and then periodically to protect the grate surface from corrosion, and to stop food sticking. See 'Care and Maintenance'. To season the grates, pour a tablespoon of vegetable oil on a soft cloth and rub on both sides of the grates (only W-grate). Only a light coating is needed and some smoke may be visible during the preheating.**
- **Grilling requires high heat for searing and proper browning. Most foods are cooked at the "MEDIUM" to "LOW"** heat setting for the entire cooking time. However, when grilling large pieces of meat or poultry, it may be necessary to turn the heat to a lower setting after the initial browning. This cooks the food through without burning the outside. Foods cooked for a long time or basted with a sugary marinade may need a lower heat setting near the end of the cooking time. For models with Sear Burner, you can use Sear Burner to quickly brown the surface of your foods and then use U-Burner on Low to finish cooking & reach desired doneness.

Grilling

Secondary cooking
Two racks and one tray have been provided for secondary cooking. These can be utilized for warming, short time smoking (no more than 3 hours), roasting or slow-cooking food. Before using the secondary cooking surfaces with the grill hood down, ensure that the height and width of food or cooking pans is not excessive. When closing the hood there is a chance that food or cooking pans may be dislodged if these items are too big. 9kg is the maximum weight of food that should be placed in the secondary cooking area.

The secondary cooking racks and tray can be placed in four possible positions. When inserting the racks and trays above the grill, they will click into place.

Note: all trays and racks are dishwasher safe.

IMPORTANT!
Do not use the rotisserie burner when the secondary cooking racks or trays are in place. Before using the rotisserie burner, ensure that these racks and trays are removed.

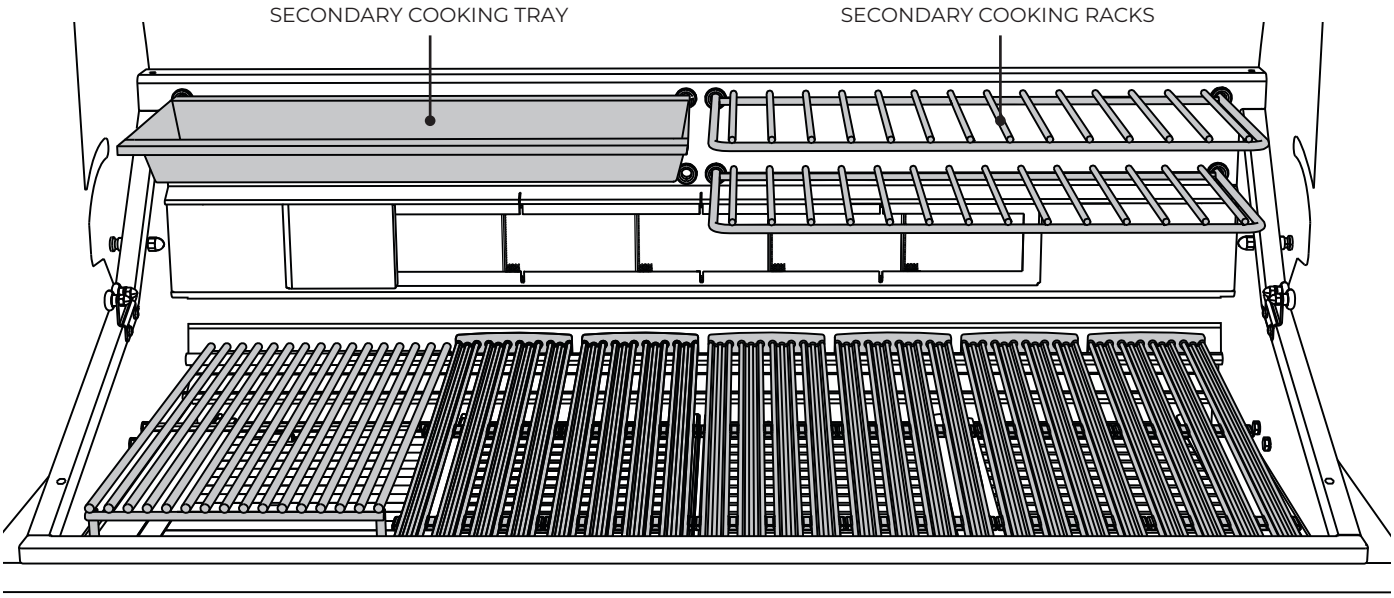

FIG. 18

Internal lighting
To add to the convenience of your grilling experience, the grill has internal lighting set inside the grill hood. This helps to help illuminate the cooking surface in low light. To turn on the lighting, push the LIGHT button on the left-hand side on the control panel. To turn it off, press the button again. For guidance on how to replace the light bulbs, please see the care and maintenance section. Replacement light bulbs are not covered by warranty.

Halo lighting
As an added feature, the grill is fitted with halo lighting. When the hood light is switched on or another attachment is in use, the halo will turn white (Fig. 19), when a knob is turned away from the 'OFF' position, the halo will turn orange (Fig. 20).

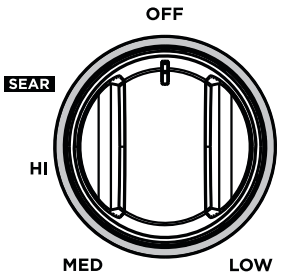

FIG. 19 White Halo

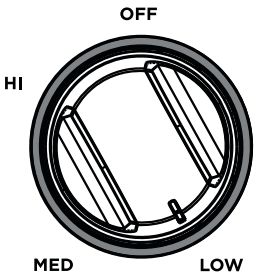

FIG. 20 Orange Halo

USING THE GRILL

Using the U-burners

1 Ensure that the drip pan and grease tray are in place.
2 Set your grates to preferred position for cooking (referring to flat or angle position plus W side or radius side up).
3 Light the grill burners following the “LIGHTING INSTRUCTIONS”.
4 Once you have verified the burners are lit & set to your preferred heat setting (For Low & Med heat setting, preheat for 5 mins, for Sear & high setting, preheat for 10 mins) with hood down.
5 Place the food on the grill and cook to the desired doneness. Adjust heat setting, if necessary. The control knob may be set to any position between “SEAR” and “LOW".
6 When you have finished using the grill, turn the control knobs to “OFF” and shut off the main gas supply.
7 Allow the grill to cool and clean the grates, drip pan and grease tray after each use.

Dual-sided grates

The double-sided grates provide varying surfaces for varying textures. The W-shaped side creates nice sear lines for steaks, chicken and chops and routes oil and grease away from the food. The opposite radius side offers more surface area for support and handling of delicate items like scallops. See below for a sample list of which foods to cook on which side of the grate.

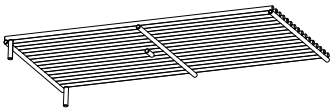

Charcoal insert grate

Designed to be used in conjunction with the charcoal insert, the wire grate fits on top of the insert to provide the perfect surface for adding smoke flavor to your food. Food can be placed directly on grate or use it to hold a tray of water under the food to help even out the temperature and keep the food surface moist.

Grilling Hints

The time it takes to reach a certain doneness within meat (rare, medium or well done) is affected by the thickness of the cut & the cooking temperature used. If grilling a 2” piece of Rib eye at high temperature it is most ideal to sear the surface first before cooking at a lower temperature until you achieve the desired doneness. This can be checked using a thermometer. When defrosting meats it is recommended that it be done overnight in the refrigerator as opposed to a microwave.

"W" SHAPED GRATE	**RADIUS GRATE**
• Chicken (bone-in and boneless cuts)	• Delicate fish fillets
• Steaks	• Lobster
• Chops	• Prawns
• Burgers	• Scallops
• Ribs	• Clams
• Kebabs	• Mussels
• Firm fish	• Indirect cooking and smoking
• Whole fish	• Potatoes
• Game	• Smaller vegetables or slices
• Oysters	• Roasted Capsicum
• Large slices of whole vegetables	• Roasted whole garlic
• Fruit	• Pizza dough and flat breads
• Bread	• Crab/Fish cakes
• Sausages	

Using the Sear burner

1 Ensure that the drip pan and grease tray are in place, and the sear plate is placed on the sear burner grate. The sear burner should be visually checked before each use.
2 Light the sear burner following the "LIGHTING INSTRUCTIONS"
3 Once you have verified the sear burner is lit, set to "MAX" and pre-heat for 10 minutes with the hood down. If using LP gas, or if the sear burner area is already warm, preheating your grill for at least 5 minutes will allow the sear burner area to warm up to searing temperatures. Ensure the ceramic tiles are uniformly red in appearance before use.
4 Place the food on the grill and cook to the desired doneness. Adjust heat setting, if necessary. The control knob may be set to any position between “MAX” and “LOW". Some food particles will show as yellow flames but should burn off.
5 When you have finished using the sear burner, turn the control knob to "OFF" and shut off the main gas supply.
6 Allow the grill to cool and clean the grates, drip pan and grease tray after each use.

IMPORTANT!
Never place food over a sear burner before it is fully pre-heated. Food particles and grease dripping onto a cold sear burner can cause damage.

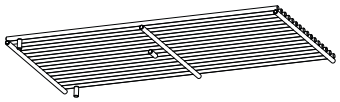

Sear burner grate (shorter front legs)

The sear burner grate sits slightly lower than the charcoal insert grate and should be used directly over the sear burner. This grate has be designed to provide clean sear lines and optimal heat distribution.

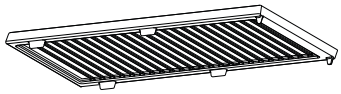

Sear burner plate

When using the sear burner the sear hot plate must be installed on the sear burner grate.

Searing hints

Your sear burner can be used to achieve perfect surface browning on your food before moving it to a low heat to finish the cooking process. The sear burner is ideal for the sear part of the reverse sear cooking method as it provides optimal conditions for direct searing.

Due to intense heat produced by the sear burner, we recommend keeping a close eye on your food & turning it regularly for optimal searing.

Do not allow the sear burner to get wet

Failure to keep the sear burner dry may result in product damage or poor performance. If the burner does get wet, allow it to dry completely before use. The sear burner is not dishwasher safe.

1 Remove the sear burner (refer to page 43)
2 Rest the burner upside down to allow the water to drain.
3 Let the burner dry before reinstalling into the grill (refer to page 43)

If the burner flares up or does not turn red during the pre-heat process, the burner may require replacement.

Grate positions

As well as moving the grates to be positioned to your preference along the grill, the dual-sided grates can also be placed flat or in an angled position. If the grates are hot, please use the multi-tool to move the grates or re-position them. Placing the grates in an angled positioned (Fig. 21), allows fat and grease to run off food and into the grease management system. It also allows for a slightly slower cooking, than if the grate was placed flat (Fig. 22). If you are using a griddle plate please ensure that the plate is flat or tilted at an upward angle, and not tilted down. Charcoal grates can only be used in the flat position when resting on the high bar as shown in Fig. 23.

Dual-sided grates

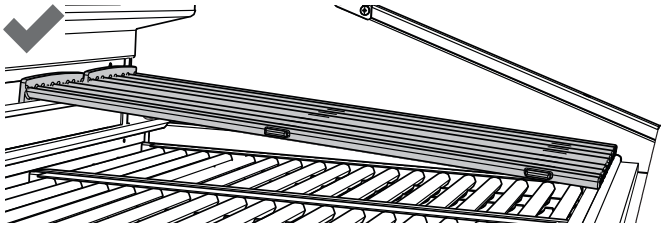

FIG. 21

- The dual-sided grates can be used in an angled position.

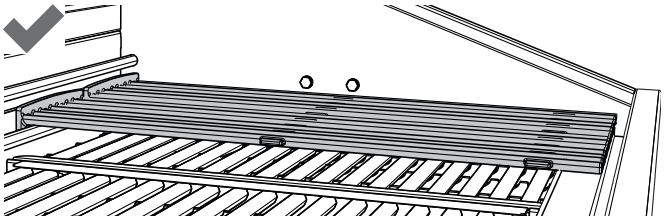

FIG. 22

- The dual-sided grates can be used in a flat position.

Charcoal grates

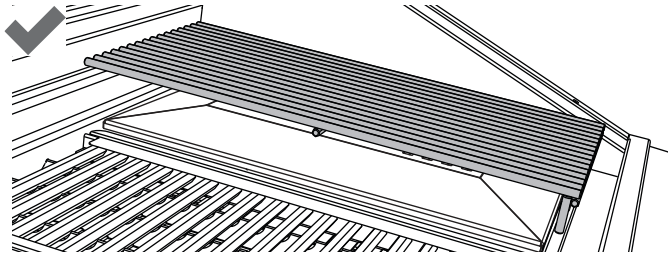

FIG. 23

- The charcoal grate can be used in an flat position when sitting on the high bar.

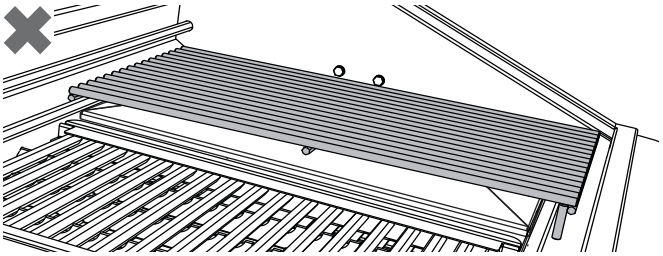

FIG. 24a

- The charcoal grate cannot be used in a flat position.
- The charcoal grate cannot be used above the sear burner.

Sear burner grates

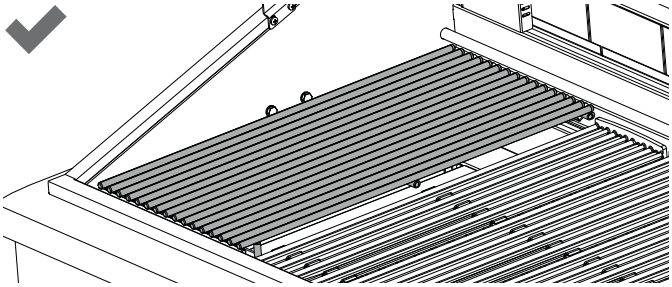

FIG. 24b

- The sear burner grate must be used over the sear burner in a flat position.
- Ensure the rear rod is secured via the hooks at the back of the grill.
- The sear burner plate rests on top of the sear burner grate.

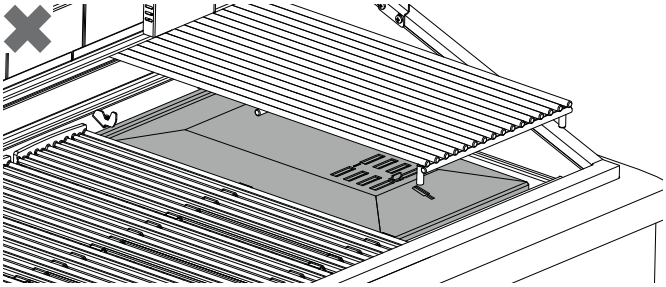

FIG. 24c

- The sear burner grate cannot be used over the charcoal insert.
- Do not place the sear burner grate above the back rods at any time. It must be secured via the hooks at the back.

Using the multi-tool

The multi-tool is an accessory that comes included with the grill. This can be used to lift and move grates, lift the charcoal burner lid and adjust the charcoal burner venting filters. It can be used to scrape grease and fat residues into the hole which directs grease down into the drip pan.

To adjust grates using the multi-tool

1. Grip the multi-tool handle, with the flat-edged end at the top.
2. Rotate the multi-tool 90 degrees and insert the flat-edge end into the center grate slot, making sure the end is below the middle horizontal bar of the grate. Note: there is greater balance and control of the grate when the multi-tool is centered.
3. Rotate the multi-tool back 90 degrees. The notches in the flat-edged end will lock the grate into place.
4. Carefully lift the grate out of the grill or into your desired position.
5. Rotate the multi-tool again to remove it from the grate.

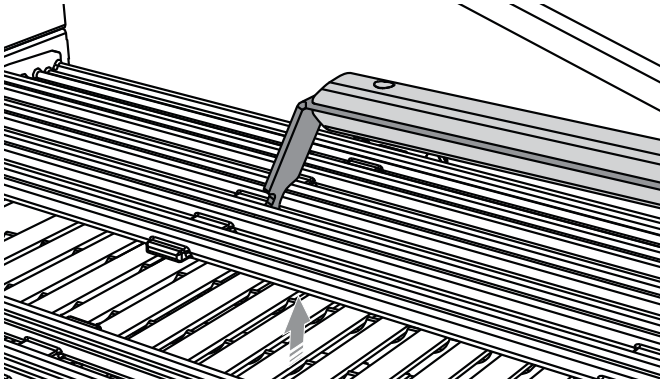

FIG. 25

IMPORTANT!

Take care when using the multi-tool to move the grates. The hot and heavy grates can cause injury.

Charcoal insert

IMPORTANT!

Do not use lighter-fluid in the charcoal insert or on the grill. The solid fuel will ignite from the burners, it does not need to be lit by a match or butane lighter.

1 Place charcoal, woodchips or briquettes into the insert. Be careful not to overload with solid fuel (one layer of briquettes is recommended).
2 Remove the grates and ceramic rods. Place the charcoal insert on top of the U burner. The insert will hook onto pins in the frame of the grill.
3 Light the grill burners following the lighting instructions on page 27. Turn the control knob to "SEAR".
4 Wait 8 to 10 minutes, allow smoke to get to your desired preference. The solid fuel should begin to grey around the edges.
5 Shut off the burner, the solid fuel will continue to burn and smoke.
6 When you have finished using the grill, turn the control knobs to “OFF”.
7 Allow the grill to cool and clean the grates, drip pan and grease tray after each use. The multi-tool can be used to scrape out the bottom of the insert. See Care and Maintenance on page 45 for more instructions on cleaning the charcoal insert.

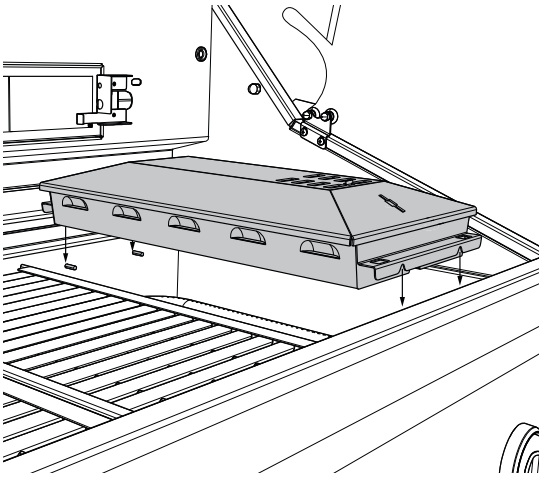

FIG. 26

Adjusting the charcoal insert

The heat and burn rate of the charcoal insert can be controlled by adjusting insert to reduce the level of oxygen supplied to the fire and slow the cooking rate. Removing the lid provides an excellent cooking surface for direct grilling. Note: the wire grate must be used in conjunction with the charcoal insert for direct grilling. There is also a venting adjustment on the top of the insert lid, it is recommended that the vents are modified prior to cooking. If the lid or vents have to be adjusted during cooking, please use the multi-tool as the charcoal burner insert will be hot.

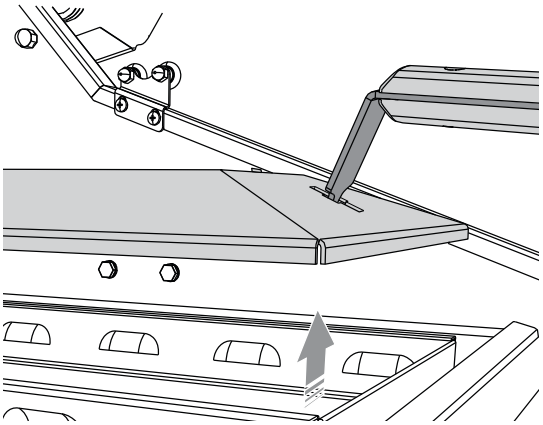

FIG. 27

Using wood and charcoal

- Wood should be soaked briefly in water beforehand
- Larger wood chunks burn slower than smaller chips, giving a longer smoking time
- Different wood types (and charcoal types) impart different flavours to the food
- Charcoal and wood can be added periodically to the tray as required to extend the cooking time

IMPORTANT!

- **When using multiple grill accessories (e.g. charcoal insert, griddle plate etc), at least one of the two center burners should remain accessory-free.**
- **The above accessories cannot be used over the sear burner.**

IMPORTANT!

When connecting your rotisserie motor, first connect the motor to the grill and then plug the grill into the outlet.

General

The grill rotisserie system is designed to cook items from the back using infrared heat. The location of the burner allows the placement of the secondary cooking tray beneath the food to collect juices and drippings for basting and gravy. To flavor the contents of the cooking tray, you can add herbs, onion, garlic, or spices. Hams are especially good with the addition of pineapple slices and brown sugar to the cooking tray. The rotisserie burner is an infrared type which provides intense searing radiant heat. Preferred by chefs over other methods, this intense heat is magnificent for searing in the meat's natural juices and nutrient.

The orange/red glow will even out in about five minutes. The rotisserie motor is equipped with metal gears and is capable of turning a cut of meat or poultry that weighs up to 25 kg. The rotisserie motor on the grills is secured down to a cast rotisserie block with two black screw-down knobs. The rotisserie block is in turn bolted to the side panel. The rotisserie rod is assembled into the motor assembly by placing the pointed end into the motor, and resting the other end on the support at the left side of the grill. With the rod pushed as far as possible into the motor, the round end of the rod should rest on the rollers.

The motor is equipped with a halogen bulb to provide light when other sources of light are not sufficient. Use only a 40W (or its equivalent) Max. Halogen Narrow Flood replacement bulb.

IMPORTANT!

Halogen lamps are constructed of a glass bulb with a pressurized internal filament tube that operates at high temperatures and could unexpectedly shatter. Should the outer bulb break, particles of extremely hot glass could be discharged into the fixture enclosure and/or surrounding environment, thereby creating a risk of personal injury or fire. When replacing the bulb, let the bulb cool, and assure that power to the light has been turned off. Never allow the hot bulb to come into contact with water. DO NOT TOUCH the light bulb when in use. It may be hot enough to cause injury.

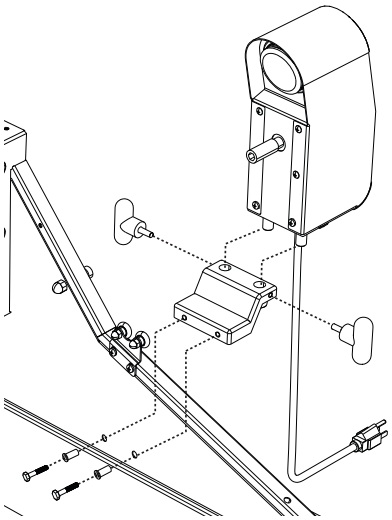

FIG. 28

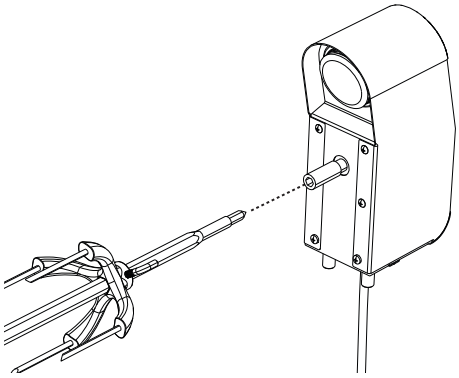

FIG. 29

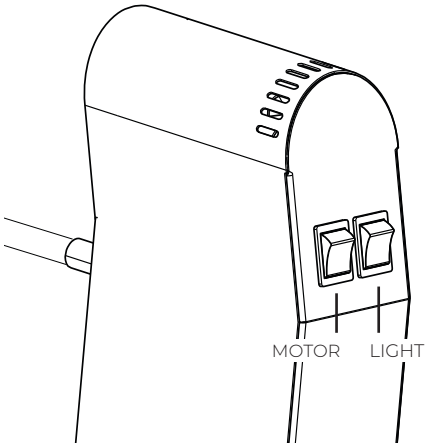

FIG. 30

IMPORTANT!

Do not use the rotisserie burner when the secondary cooking racks or trays are in place. Before using the rotisserie burner, ensure that these racks and trays are removed.

Preparation
Recommended: dental floss or butcher string, scissors, secondary cooking tray, pliers, meat probe, foil, and hot pads.

Working area
Allow enough space to accommodate food and rotisserie rod assembly in a clean environment.

Meat preparation
Tie meat with butcher string or dental floss in three areas. Purchase a roast that is equally balanced from top to bottom in size to ensure meat will cook evenly while on the Rotisserie. For Poultry, tie wings and legs to the body using dental floss or butcher string to prevent flopping around while turning.

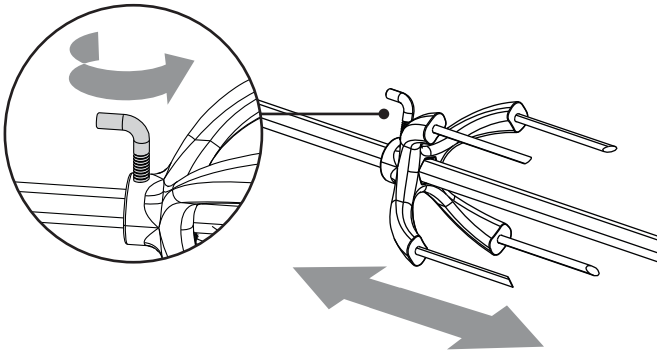

1 Determine the center placement for the food, put first prong on the rod, turn 'L'- shaped screw to tighten.

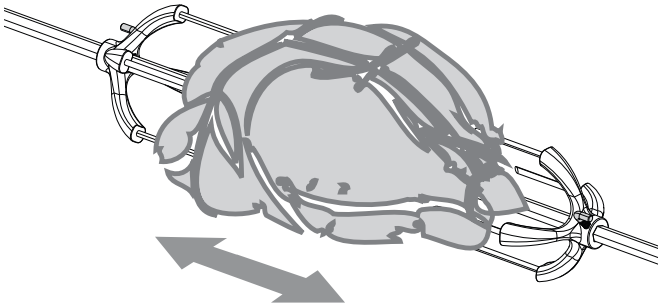

2 Center tied meat/poultry on the rod, place second prong, turn 'L'- shaped screw to tighten.

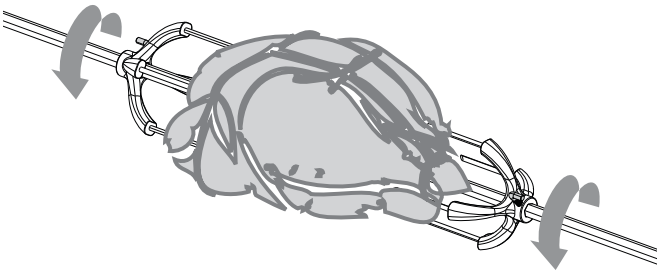

3 Pick up the rod, rotate it to check for balance. If unbalanced, adjust prongs and food. Take pliers and tighten the 'L'- shaped screws on both prongs.

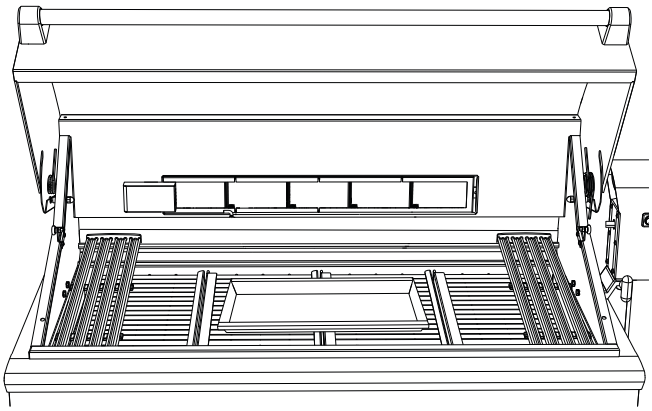

4 Remove secondary cooking racks. To catch meat drippings, place secondary cooking tray onto grates or ceramic radiant rods depending on your preference. Note: grates must first be removed if placing tray on ceramic radiant rods.

To light the rotisserie burner before cooking

The location of the rotisserie burner makes it more susceptible to strong wind conditions, more so than the protected grill burners. For this reason you should avoid operating the rotisserie during windy conditions. As an added safety feature we've equipped the burner with an automatic safety valve which will not allow gas to flow to the rotisserie burner unless the following conditions are present with the knob on:

1 The safety valve button is pressed, and held down.
2 The safety valve thermocouple has been sufficiently heated to keep safety valve open.
Note: the Grill Igniter will glow orange, but there will be no clicking sound during ignition.

Push in and hold the selected burner knob for two seconds. Verify that the Grill ignitor is glowing. Turn the burner knob to "HI" position. Then press and hold the safety valve button in for 10 seconds or until the burner remains lit. Once lit, turn control knob to desired setting. If burner does not light, turn knob "OFF" and wait five minutes before trying again so any accumulated gas may dissipate.

- If relighting a hot burner, wait five minutes.
- Never leave the control knob on if rotisserie is not in use.
- Never light the grill or sear burners under the rotisserie while the rear rotisserie burner is lit.

Manual lighting

To manually light the rotisserie, place a butane lighter near the tip of the thermocouple. Push in and turn the control knob to "HI". Hold the safety valve button in for 10 seconds or until the burner remains lit. Once lit, turn control knob to desired setting. If the burner does not light, release the safety valve button and turn the control knob to "OFF" and wait 5 minutes before trying again.

IMPORTANT!

Keep hands and face away from front of burner! Stand to the side when lighting. Once lit move hand away quickly.

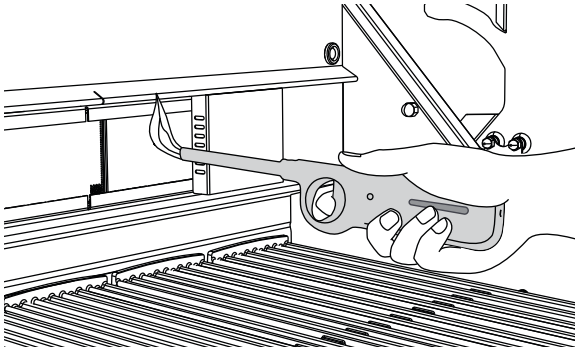

FIG. 31

IMPORTANT!

Electrical Earthing Instructions: this appliance (rotisserie motor) is equipped with a three-prong (earthing) plug for your protection against shock hazard and should be plugged directly into a properly earthed three-prong receptacle or a three-prong earthed extension cord rated for the power of the rotisserie motor and approved for outdoor use. Do not cut or remove the earthing prong from this plug. Use only a residual current device (RCD) protected circuit.

The rotisserie motor must be electrically earthed in accordance with local codes. The rotisserie motor should be supplied through a residual current device (RCD) having a rated residual operating current not exceeding 30 mA. Keep the rotisserie motor electric cord away from the heated surfaces of the grill. When not in use, remove and store the motor in a dry location. To protect against electric shock, do not immerse the cord or plug in water or other liquid. Unplug rotisserie unit from the outlet when not in use and before cleaning. Allow the rotisserie to cool before putting on or taking off parts.

Grilling

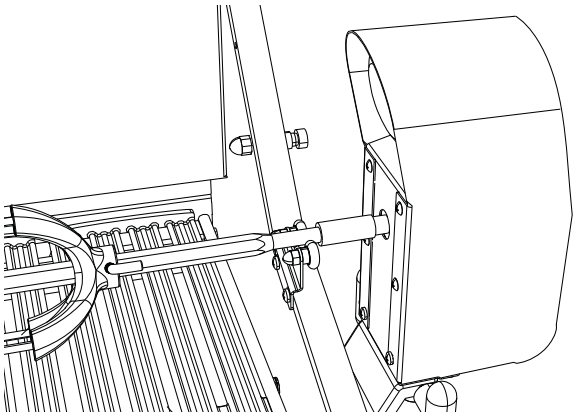

1 Place prepared rod into motor, lay across and into the rollers on other side.

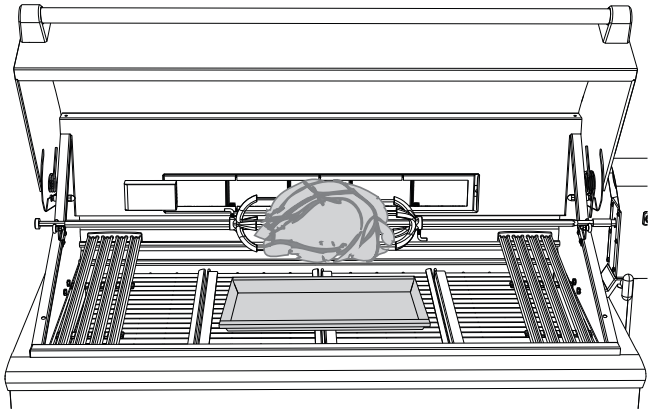

2 Once placement has been verified, ignite burner and start rotisserie motor. Turn the control knob to the desired setting.

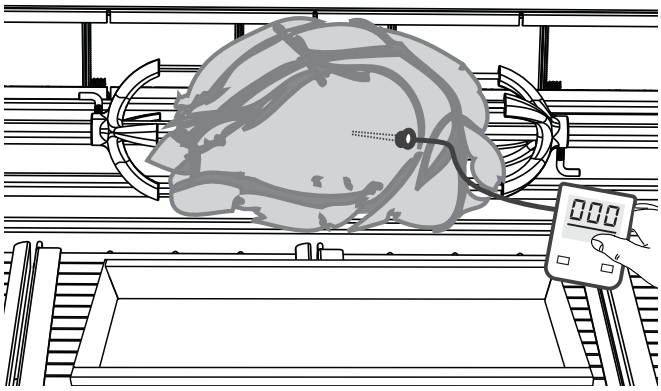

3 To check temperature of the meat, turn off motor and turn temperature to low while using a meat probe.

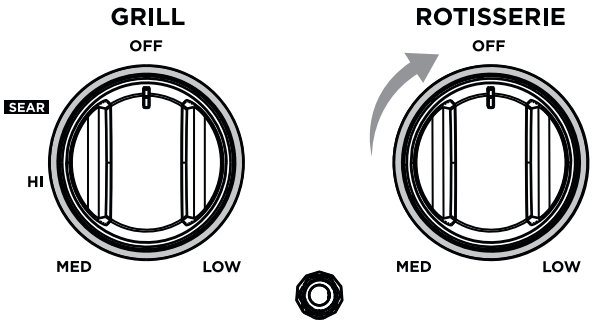

MED & LOW not available on 48" NG Model

4 Once finished, turn the motor and rotisserie knob to “OFF”. If you have finished using the appliance altogether, turn the main gas supply off too.

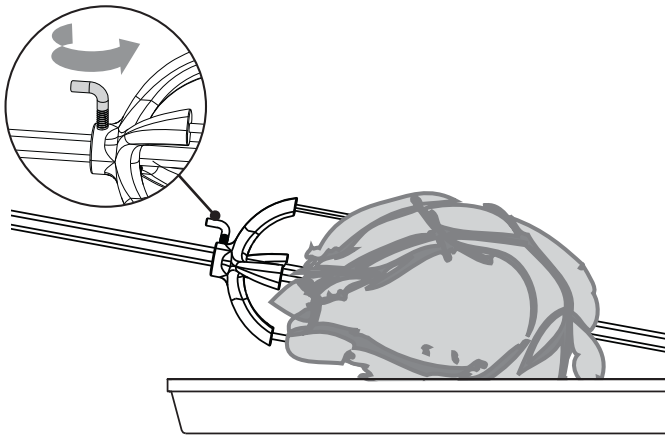

5 Remove the rod and place meat or poultry on pan then remove prongs. Take care as the rod will be hot.

IMPORTANT!

The prongs are very sharp. Keep hands away from tips when removing the food.

Note: cover with foil for a 15 to 20 minute waiting time. Meat will carve better and juices will go back into the meat.

Rotisserie rod storage

The rotisserie rod can be stored in the tray located under the grill head. When storing the rotisserie rods, please use two hands to store it correctly and ensure it is locked into place. Please use two hands to remove the rod from its storage compartment, taking care to ensure it does not drop.

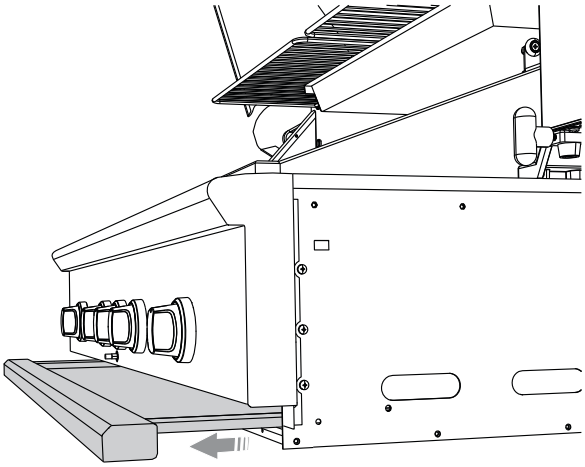

FIG. 32

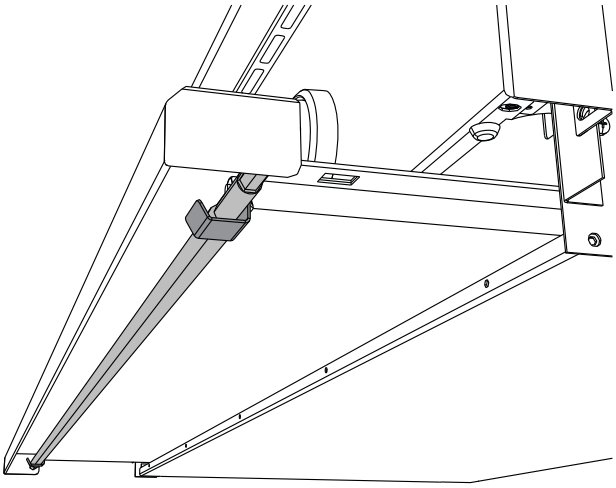

FIG. 33

Using the rod storage unit

1 Slide out the drip tray that sits underneath the control panel.
2 Locate hooks under front lip of the drip tray.
3 Place rotisserie rod onto hooks.
4 Slide the drip tray back into place.

ACCESSORIES

The following accessories can be purchased separately from authorized DCS dealers.

Grill covers

To ensure high performance and longevity of your grill, we recommend purchasing a grill cover. Particularly if your grill is going to be stored outside.

Storage unit

The unit can be bolted onto either side of the grill. Please note, if you are using the rotisserie, the storage unit will need to be installed on the opposite side to where the motor sits. You can install up to two storage units on the grill, however, as the storage unit is attached at the same location as the rotisserie motor, installing two storage units will mean that the rotisserie motor cannot be installed.

All removable parts of the storage unit are dishwasher safe. Please see the storage unit quick start guide for install instructions, use and care and further information.

Insulated jacket

We recommend purchasing a DCS insulated jacket if installing your grill into a combustible enclosure, as it will reduce the risk of fire, property damage and personal injury. Please see the insulated jacket quick start guide for install instructions, use and care and further information.

Charcoal Insert

Enjoy smoky barbecue flavour with the ease of instant gas flame ignition. Grill directly on the cooking grate or add wood chips for more smoke. W-shaped with adjustable vents which help the charcoal last longer.

Griddle Plate

The griddle plate can be purchased separately. Do not place griddle plates side-by-side. Please see the griddle plate quick start guide for install instructions, use and care and further information.

Cleaning of this appliance must be carried out on a regular basis. Follow these instructions for cleaning the grill every six months or after any period of extended disuse.

IMPORTANT!

Before each use, inspect the gas supply piping or hose prior to turning the gas "on". If there is evidence of cuts, wear, or abrasion, on the piping or hose it must be replaced prior to use. Replace the gas hose at seven year intervals.

Regulator and hose replacement
The pressure regulator and hose assembly supplied with the unit must be used. If replacements are needed, contact customer care at www.fisherpaykel.com. Do not use the grill if the odor of gas is present. If the unit is LP, screw the regulator into the tank and leak check the hose and regulator connections with a soap and water solution before operating the grill. Turn all knobs to "OFF" then turn on the gas supply. If LP, check that there is gas in the tank.

If the unit is LP, check the the gas cylinder certification test date, if past the certification test date donot connect the gas cylinder.

IMPORTANT!

- **Always keep your face and body as far away from the grill as possible when lighting.**
- **Do not leave the grill unattended while cooking.**
- **Keep a spray bottle of soapy water near the gas supply valve and check connections before each use.**
- **Do not attempt to light the grill if the odor of gas is present.**
- **Wait five minutes before relighting a hot grill.**

Grill grates

Method 1
Turn burners on "HI" for 15-20 minutes to burn any remaining food particles. After turning the grill "OFF", use a brass bristle barbeque brush to remove any remaining food particles or ash.

Method 2
The easiest way to clean the grill is immediately after cooking is completed and after turning off the flame. Wear a barbeque mitt to protect your hand from the heat and steam. Dip a soft brass bristle barbeque brush in a mixture of two cups of tap water and 1/2 cup of vinegar and scrub the hot grill. Dip the brush frequently in the bowl of water and vinegar. Steam, created as water contacts the hot grill, assists the cleaning process by softening any food particles. The food particles will fall onto the ceramic rods and burn or fall into the drip pan. If the grill is allowed to cool before cleaning, this process will be more difficult.

Method 3
Take about 30cm of aluminium foil, crumpled up in a ball and rub it over cooled grates to release food particles.

Note: grill grates must be re-seasoned after cleaning to prevent rust stains.

Before you begin

1 Wash the griddle with hot water and dishwashing liquid and rinse well.
2 For best results, season before cooking.
   a Spread a thin layer of vegetable oil over the sear plate surface.
   b Turn the dial to medium heat setting.
   c Turn the dial to OFF when the oil begins to smoke and allow the sear plate to cool. Repeat as needed.

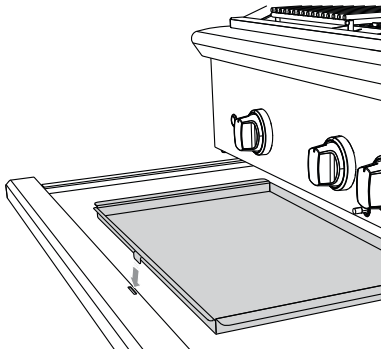

FIG. 34

Drip pan and grease tray
The full width drip pan with grease tray will collect grease from the grill section and boil overs and spills from the side burners. Allow the pan and its contents to cool before attempting to clean. Clean grease from the pan often to avoid the possibility of a grease fire.

Ceramic rods
It is not necessary to remove the ceramic rods for cleaning. They burn themselves clean during the next cooking operation. Periodically the trays holding the ceramic rods need to be turned over, and shaken free of debris for a thorough cleaning. How often you use the grill and the amount and type of food cooked will determine when it is necessary to clean the trays. If grease can be seen on the top of the tubes or if there are a lot of flare-ups during cooking, the tubes need to be turned over and heated on “HI” for 30 minutes; longer for heavy soil.

304 Stainless steel
The grill is made from non-rusting and non-magnetic stainless steel. After initial usage, areas of the grill may discolor from the intense heat given off by the burners, this is normal. There are many different stainless steel cleaners available. Always use the mildest cleaning procedure first, scrubbing in the direction of the grain. To touch up noticeable scratches in the stainless steel, sand very lightly with wet 100 grit emery paper in the direction of the grain. Specks of grease can gather on the surfaces of the stainless steel and bake on to the surface and give the appearance of rust. For removal use an abrasive pad (Scotch Brite is good) in conjunction with a stainless steel cleaner. Always rub in the direction of the grain.

Note: stainless steel tends to corrode in presence of chlorides and sulfides especially in coastal areas. To ensure corrosion prevention, wash all stainless steel surfaces every three to four weeks with fresh water and stainless cleaner. Keep grill covered when not in use.

Removing the U-burners for cleaning

1 Ensure the burners have cooled and the gas supply has been turned off at the cylinder valve or shut-off valve.
2 Remove the grill grates, then lift out the radiant trays and grease shields .
3 Using a Phillips screwdriver, unscrew the clamps holding the burners in place on either side (Fig. 34a). Put the clamps and screws safely aside.
4 Grasp the curved section of the burner in the rear and gently pull up to release the securing tabs from the rear support bracket.
5 Move the burner slightly away from you so as to slide it out from the collector box and disengage the burner inlet from the injector inside the valve hole in the front.
6 Angle the burner sideways and lift out.

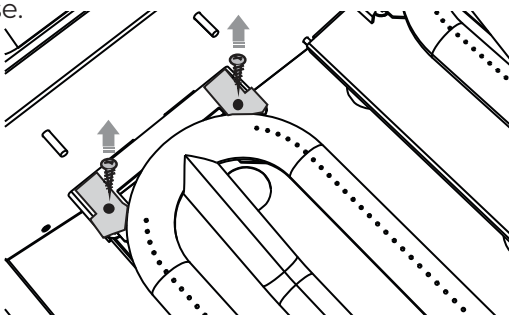

FIG. 34a

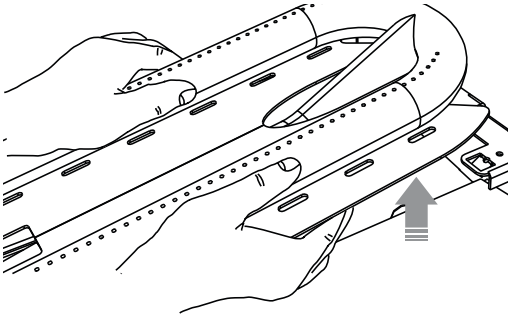

IMPORTANT!
When re-installing the u-burner after cleaning, ensure that it is completely level and locked in place. This is needed to ensure your grill provides an even cooking performance.

U-burner cleaning
Clean the exterior of the burner with a stainless steel wire brush. Clear stubborn scale with a metal scraper. Clear any clogged ports with a straightened paper clip. Never use a wooden toothpick as it may break off and clog the port. Shake out any debris through the air shutter. Use a flashlight to inspect the burner inlet to ensure it is not blocked. If obstructions can be seen, use a metal wire coat hanger that has been straightened (see Fig. 35).

Orifice cleaning (U-burners, rotisseries and sear burners)
With the burner removed, remove the orifice and shine a flashlight through the opening to ensure there is no blockage. Use a needle to clear any debris. Be extremely careful not to enlarge the hole or break off the needle.

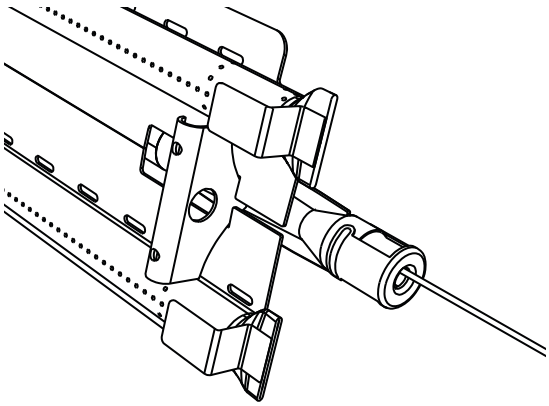

FIG. 35

Removing the sear burner for cleaning

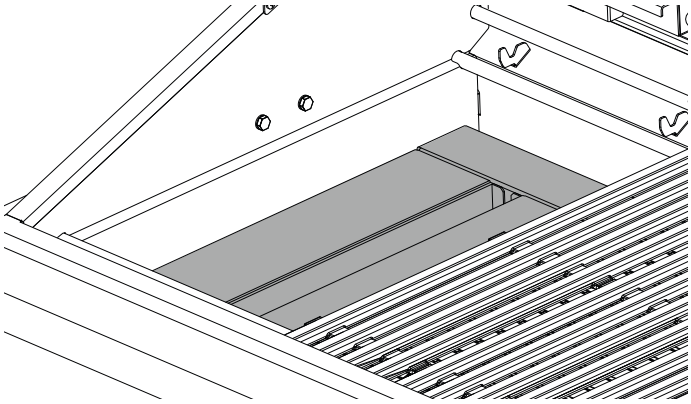

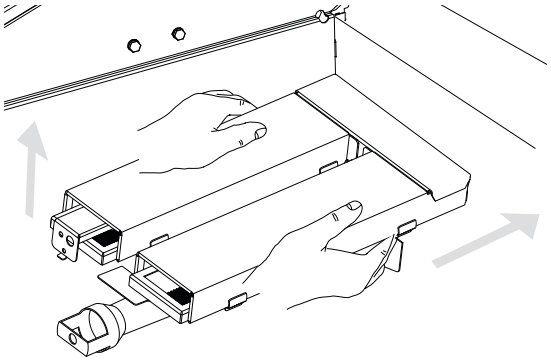

1 Ensure gas supply has been turned off and any grill grates have been removed.

2 Grip the sear burner at the sides and lift up at the rear so the burner is removed from its mount. Slide the burner to the rear of the product so that the air shutter head comes off the brass orifice at the front. Lift burner upwards at the front of the product to remove.

Sear burner cleaning

Gently vacuum the sear burner to remove debris from the pores . Do not use a wire brush to clean the burner. Avoid submerging the sear burner in water.

Sear burners are not dishwasher safe.

Removing and cleaning the sear burner mesh

Lift the wire mesh up off the sear burner. Gently brush off any soil or food residue from the mesh and c heck for any insects and insect nests.

For a deeper clean of the mesh, it can be rinsed in warm water once removed from the burner.

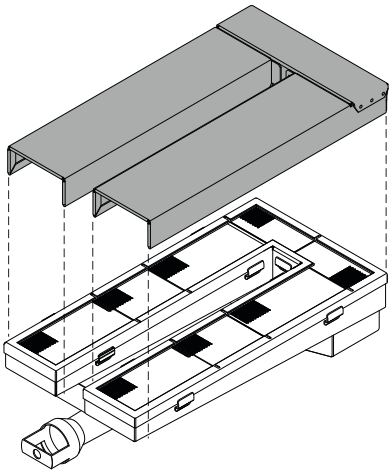

IMPORTANT!

When re-installing the sear burner after cleaning, ensure that it is completely level and locked in place. This is needed to ensure your grill provides an even cooking performance.

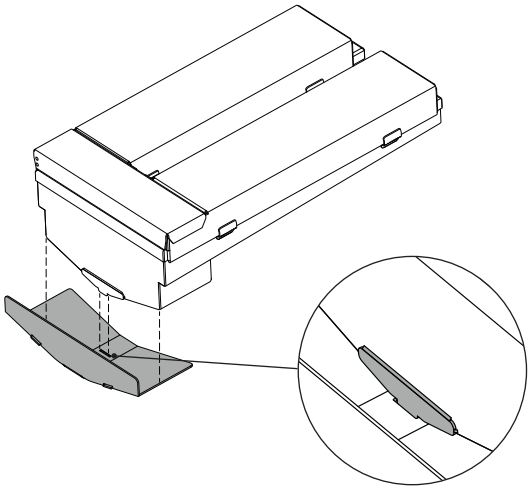

Burner alignment

IMPORTANT!

Center the burner onto the orifice properly before lighting the grill to prevent fire hazard or explosion.

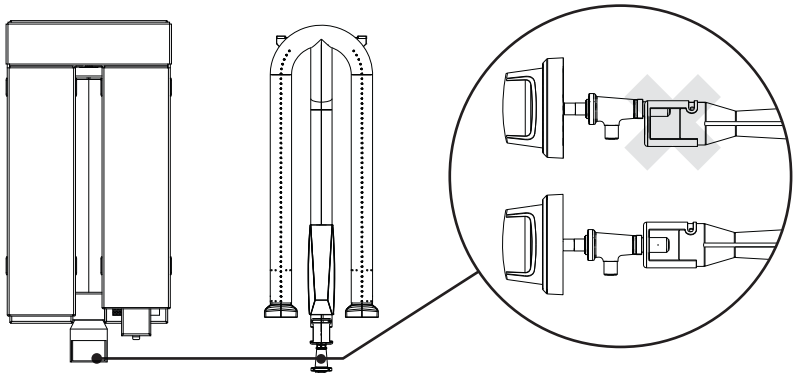

REMOVE DRIP PAN TO VIEW CONNECTION

Fig. 36

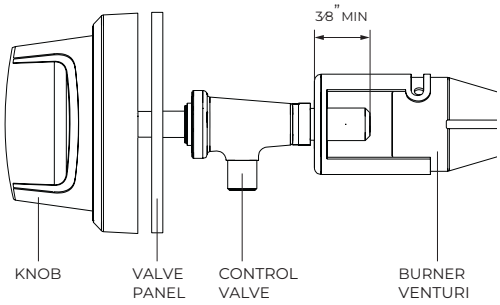

Fig. 37

Be careful not to misalign the air shutters' original position (unless readjusting for NG units). Lower the rear of the burner into the cutouts on the support channel at the rear of the burner box. Make sure it is level and does not rock. Light all of the burners and check that the flame is blue, stable and even. If adjustments are necessary, refer to page 24. Complete these adjustments prior to cooking.

Replace internal lighting bulbs

Note: replacement bulbs are halogen, 12 volt, 10W max, T3 type with a G4 bi-pin base.

1 Carefully remove the light bulb covers using your fingers or a screwdriver.
2 Remove the light bulb and replace with a new bulb. Use gloves when handling the halogen bulbs as oils from finger-tips could damage the bulb.
3 Reinsert the light bulb cover. It should click back into place.

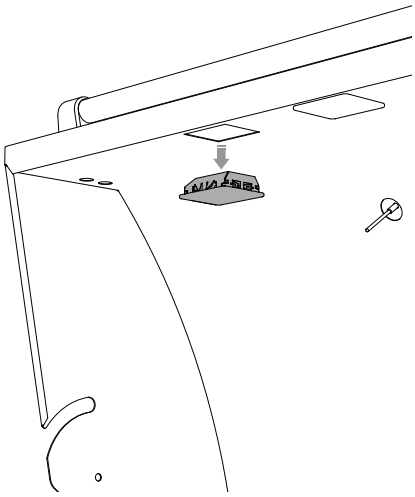

Cleaning light bulb covers

1 Carefully remove the light bulb covers using your fingers or a screwdriver.
2 Clean the covers and remove grease with a cloth, warm water and dishwashing liquid.
3 Reinsert the light bulb cover. It will click back into place.

IMPORTANT!

Halogen lamps are constructed of a glass bulb with a pressurized internal filament tube that operates at high temperatures and could unexpectedly shatter. Should the outer bulb break, particles of extremely hot glass could be discharged into the fixture enclosure and/or surrounding environment, thereby creating a risk of personal injury or fire. When replacing the bulb, let the bulb cool, and assure that power to the light has been turned off. Never allow the hot bulb to come into contact with water. DO NOT TOUCH the light bulb when in use. It may be hot enough to cause injury.

CARE AND MAINTENANCE

Care of the multi-tool

- Wash the multi-tool with hot soapy water after each use.
- To protect the condition of the natural wood handle, do not store while wet or in direct sunlight.

IMPORTANT!
Take care when handling and cleaning the multi-tool, as it has sharp edges that could cause injury.

Cleaning the charcoal insert:

1 Once cooled, remove the charcoal insert from inside the grill and dispose of the ash safely.
2 Scrape off any possible food residue using the multi-tool.
3 Clean off the carbon deposit on the bottom of the insert using a brass bristle barbeque brush.
4 Wash the insert with hot soapy water.

IMPORTANT!
Please do not touch or move the charcoal insert while the coals are burning. Please wait until the coal or ash has cooled before cleaning out the charcoal insert. Dispose of the ash in a fireproof container.

Cleaning secondary cooking surfaces (tray and racks)

1 Wait until trays and/or racks have fully cooled before removing from the grill.
2 Place in dishwasher. All trays and racks are dishwasher safe.

If handwashing is preferred:

1 Wait until trays and/or racks have fully cooled before removing from the grill.
2 Wash in hot soapy water using a non-abrasive pad.

Cleaning the dials

1 Use a soft cloth and mild detergent to clean the dial area. Take care when cleaning the dials and do not use harsh or abrasive chemical cleaners.

TROUBLESHOOTING

Before calling for service
If the grill does not function properly, use the following checklist before contacting Customer Care to arrange for service. You may save the cost of a service call. Troubleshooting is for general purposes only. If the problem persists and you feel you require service, contact Customer Care. Only authorised agencies can perform warranty service. See section 'Service' for contact details.

PROBLEM	POSSIBLE CAUSES	WHAT TO DO
Grill won't light when the control knob is pushed	• Gas supply is turned off • Power supply is off	• Check gas supply • Check that the grill is connected to a live AC power source • Check RCD outlet, reset if tripped • Check power supply fuse, replace if blown
Low heat with knob in "HI/SEAR" position	• Grill may be in a dusty area • If using LP gas, tank may be empty • If only one burner is low, a port may be obstructed	• Move to a less dusty area if possible • Check gas supply • See page 42 for instructions on cleaning the orifice and burner • Preheat grill for a full 15 minutes
Burner flame is yellow or orange in conjunction with the odor of gas	• Gas supply is turned off	• Check gas supply • Check that the grill is connected to a live AC power source • Check RCD outlet, reset if tripped • See page 37 for instructions on manually lighting the rotisserie
Rotisserie won't hold flame once button is released		• Continue holding safety valve button in depressed position until burner remains lit when released
Dial lights and grill lights don't turn on	• Power supply is off • RCD has tripped • Transformer fuse has blown	• Check that the grill is connected to a live AC power source • Check RCD outlet, reset if tripped • Check power supply fuse, replace if blown
Internal light not working	• Bulb has blown	• Remove glass lens, replace with 12v G4 halogen bulb
Sear burner flames appear to be yellow and off surface, or a portion of the tile surface is not glowing red anymore	• Food and grease collected in ceramic tiles • Build up of food particles or salts on tile surface	• Turn sear burner onto MAX and close lid allowing heat to build up and burn fats out of ceramic • For salts and food particles, gently vacuum the surface of the burner.

WIRING DIAGRAMS

BE1-36RCI models

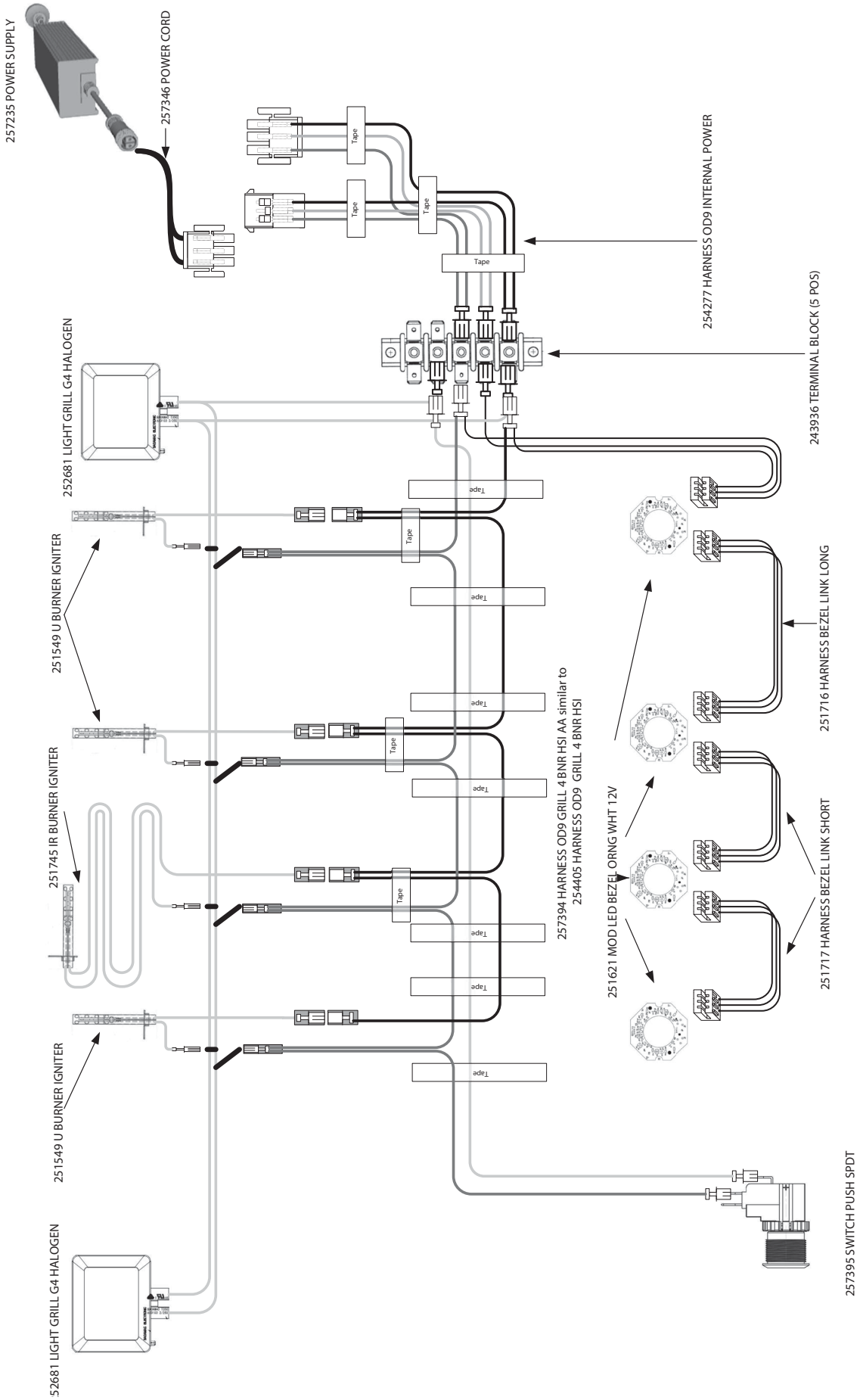

BE1-48RCI models

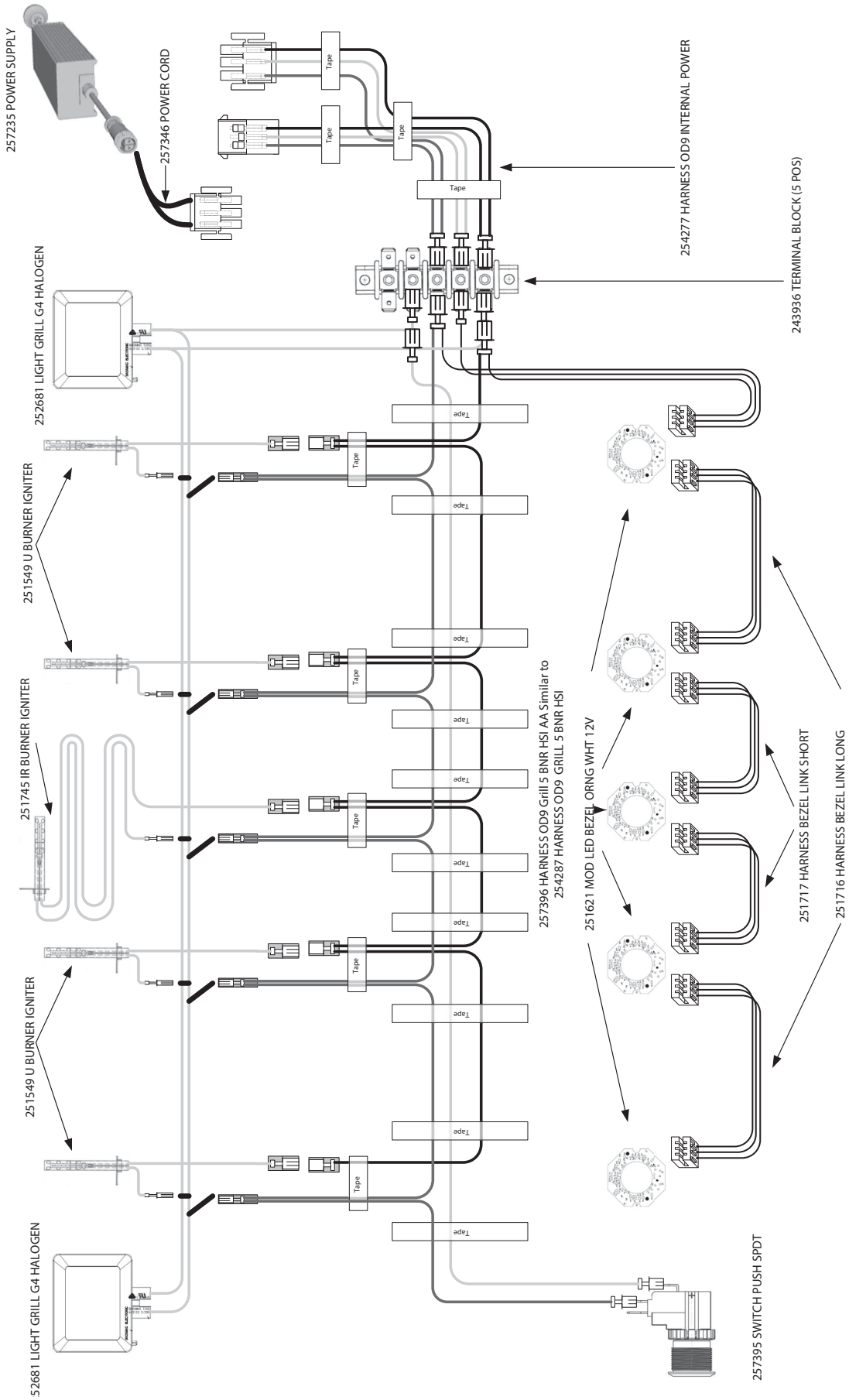

WARRANTY AND SERVICE

How to obtain service

For warranty service and to purchase replacement parts, please contact Customer Care. To arrange for service under warranty, please have the following information ready:

- Model number (can be found on the inside, right side panel behind the drip pan handle. See page 23).
- Serial number (can be found on the inside, right side panel behind the drip pan handle. See page 23).
- Code (can be found on the inside, right side panel behind the drip pan handle. See page 23).
- Date of installation.
- A brief description of the problem.

Contact us through our local website

New Zealand www.fisherpaykel.com/nz/support
Australia www.fisherpaykel.com/au/support

Write to us

New Zealand Fisher & Paykel Appliances Limited
PO Box 58546
Botany, Auckland 2163
Fax: (09) 273 0656
Email: customer.care@fp.co.nz

Australia Fisher & Paykel Customer Services Pty
PO Box 798,
Cleveland,
QLD 4163
Fax: + 61 7 3826 9298
Email: customer.care@fp.com.au

Complete and keep for safe reference:

Model _____

Serial No. _____

Purchase Date _____

Purchaser _____

Dealer _____

City _____

State _____

Zip _____

Country _____

WWW.FISHERPAYKEL.COM

© Fisher & Paykel Appliances 2024. All rights reserved.

The models shown in this guide may not be available in all markets and are subject to change at any time.

The product specifications in this guide apply to the specific products and models described at the date of issue. Under our policy of continuous product improvement, these specifications may change at any time.

For current details about model and specification availability in your country, please go to our website or contact your local Fisher & Paykel dealer.