PROFESSIONAL GRILL

BE1-48RCI, BE1-36RCI, BE1-48RC, BE1-36RC, BE1-48C-L,
BE1-36C-N and BE1-36C-L models
BGA36-IJS and BGA48-IJS insulated jackets

INSTALLATION GUIDE

⚠ DANGER

IF YOU SMELL GAS

- Shut off gas to the appliance.
- Extinguish any open flame.
- Open lid.
- If odor continues, keep away from the appliance and immediately call your gas supplier or your fire department.

⚠ WARNING!

- Do not store or use gasoline or other flammable liquids or vapors in the vicinity of this or any other appliance.
- An LP cylinder not connected for use must not be stored in the vicinity of this or any other appliance.

To reduce the risk of fire, electrical shock, injury to persons, or damage when using the appliance, follow the important safety instructions listed below:

⚠ WARNING!

Hot Surface Hazard

Failure to follow this advice may result in burns and scalds or serious injury.

- Accessible parts may become hot during use.
- Hood must be opened before lighting the grill.
- Never let clothing or other flammable materials come in contact with or get too close to any grate, burner or hot surface until it has cooled. Fabric may ignite and result in fire or personal injury. Keep outdoor cooking gas appliance area clear and free from combustible materials, gasoline and other flammable vapours and liquids.
- Never lean over an open grill. When lighting a burner, always pay close attention to what you are doing. Be certain you are pushing the burner knob when you attempt to light the grill.
- When using the grill, do not touch surfaces such as grill burner, grate, or immediate surrounding areas as these become extremely hot and could cause burns.
- Grease is flammable. Never operate the grill without a drip tray. Let hot grease cool before attempting to handle it. Avoid letting grease deposits collect in the drip pan. Clean the grill with caution. Avoid steam burns; do not use a wet sponge or cloth to clean the grill while it is hot. Some cleaners produce noxious fumes or can ignite if applied to a hot surface.

⚠ WARNING!

Hot Surface Hazard

Failure to follow this advice may result in burns and scalds or serious injury.

- Use only dry pot-holders; moist or damp pot-holders on hot surfaces may cause burns from steam. Do not use a towel or bulky cloth in place of pot-holders. Do not let pot-holders touch hot portions of the grill or burner grate.
- To avoid burns when cooking, use long handled BBQ tools.

⚠ WARNING!

Explosion Hazard

Failure to follow this advice may result in injury or death.

- If you smell gas, do not use the appliance.
- Do not use water on grease fires, a violent steam explosion may result. Turn all burners off, then smother fire use dry chemical or foam-type extinguisher.
- Do not heat unopened food containers such as cans – Build up of pressure may cause container to burst and result in injury.
- Leaking LP gas can cause a fire or explosion if ignited causing serious bodily injury or death.
- Contact LP gas supplier for repairs or disposal of the cylinder or unused LP gas.

⚠ WARNING!

Cut Hazard

Failure to use caution could result in injury.

- Take care: some edges are sharp.

⚠ WARNING

Excessive Weight Hazard

Failure to follow this advice may result in injury or death.

- Two or more people are required to move and install this unit.

⚠ WARNING

Electrical Shock Hazard

Failure to follow this advice may result in death or electrical shock.

- This appliance is equipped with a three-prong grounding plug for your protection against shock hazard and should be plugged directly into a properly grounded power outlet.
- Use only a Ground Fault Interrupter (GFI) protected circuit.
- Use only extension cords with a three-prong grounding plug, rated for the power of the equipment, and approved for outdoor use with a W-A marking.
- Do not immerse cord or plugs in water or other liquid.
- Do not under any circumstances cut or remove the grounding prong from this plug.

⚠ WARNING!

Fire Hazard

Failure to follow this advice may result in death or serious injury.

- Do not operate the grill under unprotected combustible construction. Use only in well ventilated areas.
- Cylinders shall be stored outdoors and out of the reach of children.
- Do not store in a building, garage or any other enclosed area.
- An appliance is considered to be outdoors if installed with shelter no more inclusive than within a partial enclosure that includes an overhead cover and three side walls, as long as 30% or more of the periphery of the enclosure is permanently open.
- All openings must be permanently open; sliding doors, garage doors, windows, or screened openings are not considered as permanent openings
- Never leave the grill unattended when in use.
- Never store a spare LP cylinder under or near this unit.
- Never fill the cylinder beyond 80 percent full.
- If the information above is not followed exactly, a fire causing death or serious injury could occur.

SAFETY AND WARNINGS

To reduce the risk of fire, injury to persons or damage when using the appliance, follow the important safety instructions listed below. Read all the guidance before using the appliance. Do not use an outdoor cooking gas appliance for purposes other than intended.

General Use

- When using the appliance, be sure that all parts of the unit are firmly in place and that everything is stable.
- Do not locate, store, or operate the appliance on a slope.
- Do not move the appliance during use. On cart mounted units, never move cart without first allowing the appliance to cool, disconnecting the power cable, and ensuring that the gas supply is turned off.
- Children should not be left alone or unattended in an area where the product is being used. Never allow them to sit, stand or play on or around the unit at any time. When in use, portions of the grill are hot enough to cause severe burns.
- Do not store items of interest to children around or below the appliance.
- Never use the appliance in a windy area.
- Do not obstruct the flow of combustion and ventilation air to the appliance.
- To put out flare-ups, adjust the controls to lower the temperature.
- Clean and perform general maintenance on the appliance regularly and after periods without use. Always turn off gas at the source prior to inspecting.
- Ensure all grill controls are turned off and the grill is cool before using any type of aerosol cleaner on or around the grill. The chemical that produces the spraying action could, in the presence of heat, ignite or cause metal parts to corrode.
- Unplug from the outlet when not in use and before cleaning. Allow to cool before putting on or taking off parts.
- Before each use, inspect the gas supply piping or hose prior to turning the gas “ON”. If there is evidence of cuts, wear, or abrasion, it must be replaced prior to use.
- You must inspect the unit at least once a year. Check immediately if the smell of gas is present and the burner flames appear yellow, the appliance does not reach temperature or heats unevenly, or the unit makes popping noises.
- When refitting each burner after cleaning, correctly center the burner onto the gas jet and ensure it is level before lighting.
- When connecting to a power supply, first connect plug to the appliance, then plug appliance into the outlet.
- Do not try lighting this appliance without reading the lighting instructions in this guide.
- After lighting burners, make sure burners are operating normally. In sunny locations, it may be difficult to see when the rotisserie and sear burners are lit. Use caution.
- The sear burner is designed specifically for searing food. Do not use the griddle plate or charcoal insert over the sear burner or cover it with any utensil type.
- Do not place griddle plates side by side on the grill.
- Do not operate in enclosed areas. This could result in carbon monoxide build-up which could result in injury or death.
- This product must be installed by a licensed plumber or gas fitter when installed within the Commonwealth of Massachusetts.

SAFETY AND WARNINGS

Fire

- Have an ABC rated fire extinguisher accessible – never attempt to extinguish a grease fire with water or other liquids.
- Never leave the product unattended when in use.
- Always remove dust cover and open hood before lighting. Do not replace cover during cooking or before appliance has cooled.
- Do not use a flame to check for gas leaks.
- Do not smoke while leak testing.
- Do not attempt to disconnect any gas connections while your appliance is in use, or the gas supply is on.
- Never connect an unregulated gas line to the appliance.

Electrical Hazards

- Do not operate with a damaged cord or plug, after the appliance malfunctions or after the appliance has been damaged in any manner. Contact the manufacturer for repair.
- Keep any electrical supply cord, the rotisserie motor cord and the fuel supply hose away from the heated areas of the grill, sharp edges and water (pools, fountains, puddles).
- When connecting, first connect plug into the appliance and then plug appliance into the outlet.
- Do not let the cord hang over the edge of a table or touch hot surfaces.

Installation Warnings

- The installation of this appliance must conform with local codes or, in the absence of local codes, with the National Fuel Gas Code, ANSI Z223.1/NFPA 54. Installation in Canada must be in accordance with Natural Gas and Propane Installation Code, CSA B149.1, and/or Propane Storage and Handling Code, B149.2 and local codes.
- This appliance must be electrically grounded in accordance with local codes, or in the absence of local codes, with NFPA 70 or the Canadian Electrical Code, Part I.
- This appliance must only be used outdoors and must not be used in a building, garage or any other enclosed area.
- An appliance is considered to be outdoors if installed with shelter no more inclusive than within a partial enclosure that includes an overhead cover and three sidewalls, as long as 30% or more of the horizontal periphery of the enclosure is permanently open. All openings must be permanently open; sliding doors, garage doors, windows, or screened openings are not considered as permanent openings.
- If installed under overhead combustible construction, the appliance must be installed in conjunction with a suitable UL 710- or ULC S646-approved heavy duty vent hood only. The vent hood must be placed in operation when the appliance is in use.
- All gas connections, installations and leak testing should be made by a qualified technician.
- Installation must comply with clearances to combustible materials as noted in the Planning Guide.
- Do not attempt to remove, repair, or replace the regulator/hose assembly. This must be done by a qualified licensed technician only. The grill system arrives leak tested.
- If the connections are not perfectly sealed, you can have a small leak and therefore a faint gas smell. Some leaks can only be found with the burner control in the “ON” position - this must be done by a qualified technician.
- Keep the ventilation openings of the cylinder enclosure free and clear from debris.
- This outdoor cooking gas appliance is not intended to be installed in or on recreational vehicles, trailers and/or boats.

Gas Requirements

- Do not change the regulator/hose assembly from that supplied with the unit or attempt to use a Type 1 equipped regulator/hose assembly with a standard 510 POL cylinder/ valve assembly.
- The cylinder pressure relief valve outlet must point away from the user when in use.
- An installer-supplied gas shut-off valve must be installed in an easily accessible location.
- All installer supplied parts must conform to local codes, or in the absence of local codes, with the National Electrical Code, ANSI/NFPA 70 or the Canadian Electrical Code, CSA C22.1, and the National Fuel Gas Code, ANSI Z223.1 or CSA-B149.1 Natural Gas Installation Code or CSA-B149.2 Propane Installation Code.
- In Massachusetts such shut-off valves should be approved by the Board of State Examiners or Plumbers & Gas Fitters.
- All pipe sealants must be an approved type and resistant to the actions of LP gases. Never use pipe sealant on flare fittings.
- A dented or rusty LP cylinder may be hazardous and should be checked by your LP supplier.
- Always check for leaks after every LP cylinder change. Check with a full cylinder.
- Do not use the appliance until all connections have been checked and do not leak.
- Before each use, inspect the gas supply piping or hose prior to turning the gas ON. If there is evidence of cuts, wear, or abrasion, it must be replaced prior to use.
- The pressure regulator and hose assembly supplied with the appliance must be used. If replacements are needed, contact Customer Care.

Storage and maintenance

- Ensure the gas supply is turned off at the supply cylinder when not in use.
- Keep appliance covered when not in use.
- Storage of the appliance indoors is permissible only if the cylinder is disconnected and removed from the unit.
- Cylinders must be stored outdoors, out of reach of children and must not be stored in a building, garage, or any other enclosed area.
- After a period of storage or non-use, the appliance should be checked for gas leaks, deterioration, proper assembly, and burner obstructions before use.
- Keep the outdoor gas appliance area clear and free from combustible materials, gasoline, and other flammable vapours and liquids.
- Clean the outdoor gas appliance, including special surfaces with recommended cleaning agents and check burner/venturi tubes for insects and insect nests. A clogged tube can lead to a fire beneath the grill.

LP Cylinder Cabinet Requirements

For a cylinder enclosure having four sides, a top and a bottom, and intended for installation in a built-in enclosure:

- At least one ventilation opening shall be provided on the exposed exterior side of the enclosure located within 5" (127mm) of the top of the enclosure and unobstructed. The opening(s) shall have a total free area of not less than $1"^2$/lb ($14.2cm^2$/kg) of stored fuel capacity.
- At least one ventilation opening shall be provided on the exposed exterior side of the enclosure 1" (25.4mm) or less from the floor level and shall have a total free area of not less than $1/2"^2$/lb ($7.1cm^2$/kg) of stored fuel capacity. The upper edge shall be no more than 5" (127mm) above the floor level.
- Every opening shall have a minimum dimension so as to permit the entrance of a 3/16" (4.8mm) rod.

LP Cylinder Hazards

- Installation must conform with local codes or with the National Fuel Gas Code ANSI Z223.1 or the CSA-B149.2 Propane Installation Code.
- This appliance can be used with any brand of 20 lb LP gas cylinder provided it is compatible with a proper retention device (not supplied for built-in installations).
- The LP gas cylinder must be:
  - Designed for use with a Type 1 system only.
  - Constructed and marked in accordance with the Specifications for LP gas Cylinders of the U.S. Department of Transportation (D.O.T.) or the Standard for Cylinders, Spheres and Tubes for Transportation of Dangerous Goods and Commission, CAN/CSA-B339.
  - Provided with a listed overfilling prevention device.
  - Provided with a cylinder connection device compatible with the connection for outdoor cooking gas appliances.
- The cylinder must be provided with a shut-off valve terminating in an LP gas supply cylinder valve outlet specified, as applicable, for connection Type 1.
- A metallic sticker with this warning is provided with the grill. Install this sticker close to your barbeque grill.
- Do not store a full cylinder in direct sunlight.
- Never use a cylinder with a damaged valve. Always check for leaks after every combustible gas cylinder change.
- The cylinder that is used must have a collar to protect the cylinder valve.
- If you intend to operate your built-in grill on LP gas utilizing a 20 lb Type 1 cylinder, an installer supplied built-in LP cylinder restraint must be installed prior to initial use of the grill.
- Gas piping and connectors must be clamped within the enclosure to avoid contact with moving parts and hot surfaces. Where the gas piping passes through an opening in the enclosure, the piping must be protected for a distance of at least 2” (50 mm) either side of the opening.
- Connection: LP gas hose with a Type 1 quick disconnect and regulator is included.
- Operating pressure: 11.0” W.C.
- All gas piping and connectors must conform to the Standard for Connectors for Outdoor Gas Appliances and Manufactured Homes, ANSI Z21.75/CSA 6.27.
- If the appliance is stored indoors, the cylinder must be disconnected and removed from the appliance.
- Grills orificed for use with combustible gas come equipped with a high-capacity hose/regulator assembly for connection to a standard 20 lb. combustible gas cylinder (Type 1). The combustible gas cylinder is not included.
- Do not use the grill until all connections have been checked and do not leak.
- If you own or use a spare cylinder, or have a disconnected cylinder, you should NEVER store it near or under the grill unit or heat box, or near any other ignition or heat source.
- Never fill the cylinder beyond 80% full.
- If the information above is not followed exactly, a fire causing death or serious injury could occur.

INSTALLATION REQUIREMENTS FOR NATURAL GAS

Natural gas Installation and connection

- Check with your local gas utility company or local codes for instructions on installing gas supply lines. Be sure to check on type and size of run, and how deep to bury the line. If the gas line is too small, the grill will not function properly. Any joint or pipe sealant used must be an approved type and be resistive to the actions of combustible gases.
- Ensure that the regulator arrow points in the direction of gas flow away from the gas supply.
- The appliance must be isolated from the gas supply piping system by closing its individual manual shut-off valve during any pressure testing of the gas supply piping system at test pressures equal to or less than 1/2 PSIG (3.5 kPa).
- An installer-supplied gas shut-off valve must be installed in an easily accessible location.
- Use threading compound on male threads only.
- Never use pipe sealant on flare fittings.
- In Massachusetts such shut-off valves must be approved by the Board of State Examiners or Plumbers & Gas Fitters.
- All piping and hoses are to run away from the product and never against the product surfaces.
- Natural Gas: Operating pressure: 4.0” W.C. Supply Pressure 5" to 14" W.C. If in excess of 14", a stepdown regulator supplied by installer is required.
- All gas piping and connectors must conform to the Standard for Connectors for Outdoor Gas Appliances and Manufactured Homes, ANSI Z21.75/CSA 6.27.

Total gas consumption of the grill with all burners on HI - Input rates BTU/hr

MODEL	BE1-36RCI	BE1-48RCI	BE1-36RC	BE1-48RC	BE1-36C	BE1-48C
MAXIMUM	88000	117000	89000	118000	75000	100000
GRILL	25000	25000	25000	25000	25000	25000
ROTISSERIE	14000	18000	14000	18000	N/A	N/A
SEAR	24000	24000	N/A	N/A	N/A	N/A

Servicing

- Do not repair or replace any part of the appliance unless specifically recommended in this guide. All other servicing should be undertaken by an authorized technician or qualified person.
- Only use the product with the type of gas specified on the rating plate. To change gas type, a factory conversion kit is required.

COMPONENTS REQUIRED

TOOLS

Not supplied

- [ ] Box cutter
- [ ] Phillips screwdriver
- [ ] Level

PARTS

Supplied

- [ ] Gas regulator parts (natural gas only)
- [ ] Gas regulator hose (LP only)
- [ ] Radiant tray ceramic rods
- [ ] Radiant trays and brackets
- [ ] Power transformer and cords
- [ ] Grill grates
- [ ] Charcoal Insert
- [ ] Charcoal grate
- [ ] Secondary racks
- [ ] Multi-tool

BE1-RCI models only

- [ ] Sear grate

BE1-RCI and BE1-RC models only

- [ ] Rotisserie motor
- [ ] Rotisserie mount and handles
- [ ] Rotisserie rod and forks

Supplied and to be discarded

- [ ] 2x pallet transit brackets
- [ ] 8x pallet Phillips screws
- [ ] 4x transit bracket screws

ACCESSING YOUR PRODUCT SPECIFICATIONS

For full product, cabinetry and service specifications, refer to the Planning Guide.

To access the Planning Guide, scan the QR code or visit dcsappliances.com/us/trade-resources/specify. Search by appliance type, product name or model code.

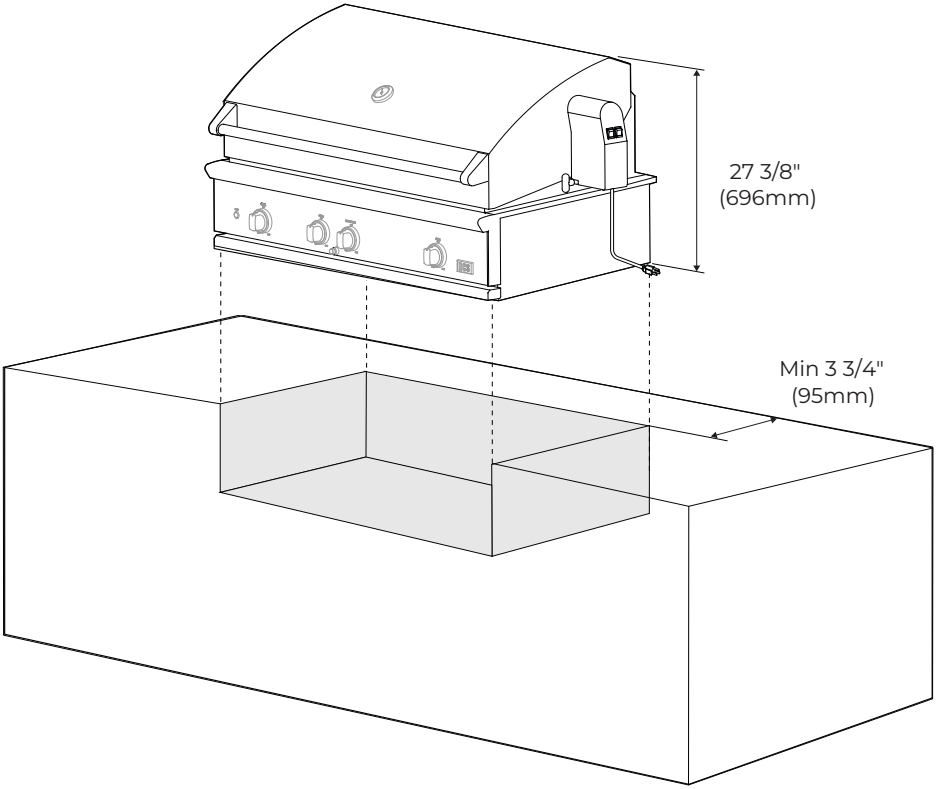

PRIOR TO INSTALLATION

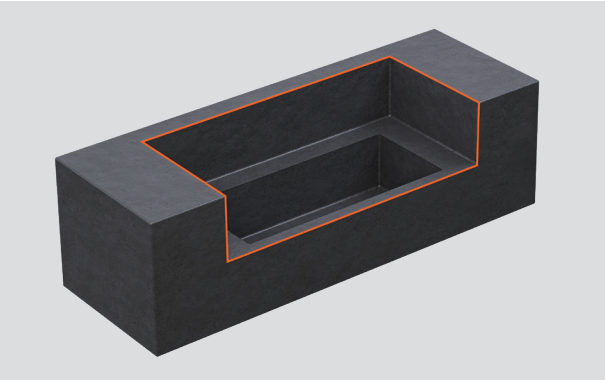

1. Measure cavity dimensions. Ensure all minimum specifications have been met and clearances have been considered.

Check ventilation requirements for LP cylinder storage cabinet enclosures on page 9, and in the Planning Guide.

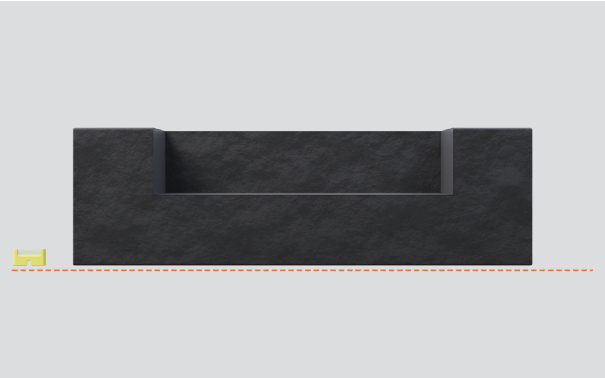

2. Ensure ground is level and clear.

dcsappliances.com/us/trade-resources/specify

3. Ensure services are accessible and correctly installed. Cabinetry should allow access to gas and power cables below the grill once installed. Refer to the Planning Guide for specifications.

UNPACK GRILL

1. Remove all eight Phillips screws from the pallet.

2. Lift carton to remove. Discard corner posts and any packaging.

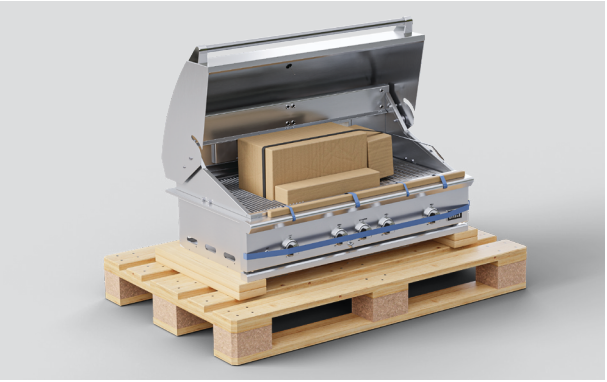

3. Open grill and cut the straps. Set aside boxes, grill grates, and racks.

4. Remove remaining tape before carefully setting aside the rotisserie rod.

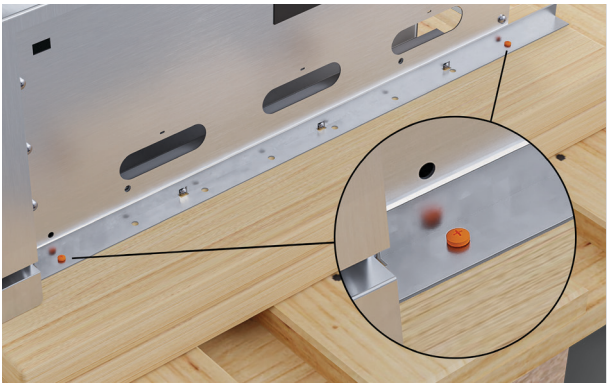

5. Remove the two Phillips screws securing the transit brackets to the pallet.

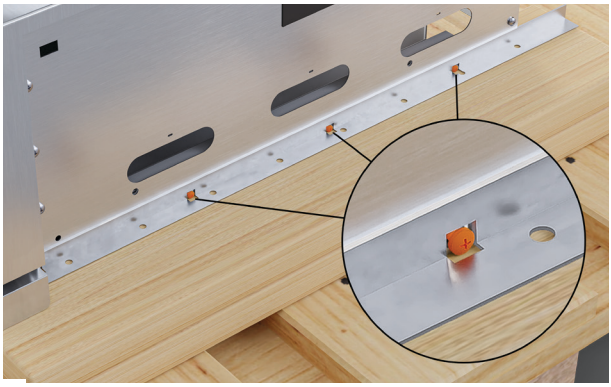

6. Loosen the Phillips screws holding the transit bracket to the grill. Lift the transit bracket to remove, then re-tighten the screws.

UNPACK GRILL

Do not place the grill on the ground or flat surface to prevent damaging the regulator assembly with the weight of the grill.

7. Remove the drip tray and set aside.

8. Product rating information can be found under and behind the right side of the tray.

Check that the type of gas matches the appliance rating plate.

UNPACK INSULATION JACKET

1. For jacket installation only:
Cut the straps and lift the box cap to remove.

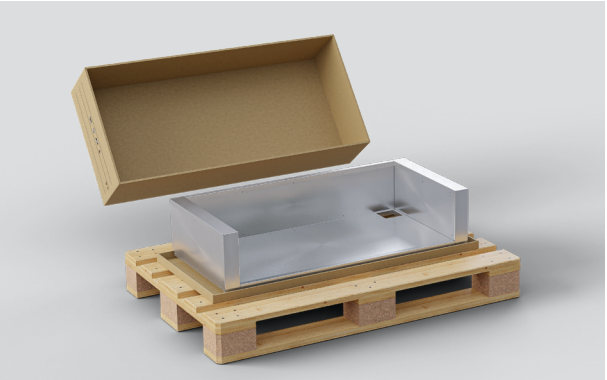

2. Lift carton and remove jacket.

3. Dispose of packaging responsibly.

INSTALL TRANSFORMER

Use only a Ground Fault Interrupter (GFI) protected circuit with this product. An outdoor 120VAC 15A GFI electrical outlet must be installed by a qualified electrician.

1. Fit the transformer to the bracket using the supplied screws.

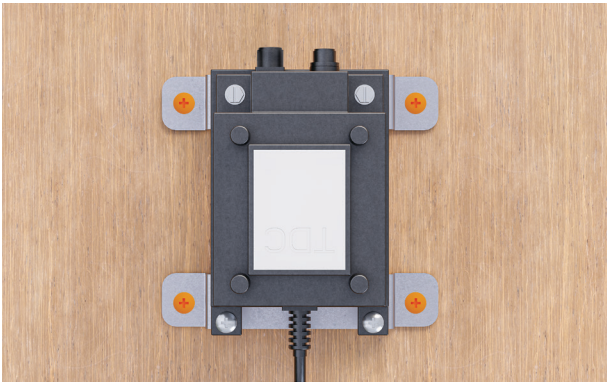

2. Install the transformer in a dry, accessible location away from excessive heat.

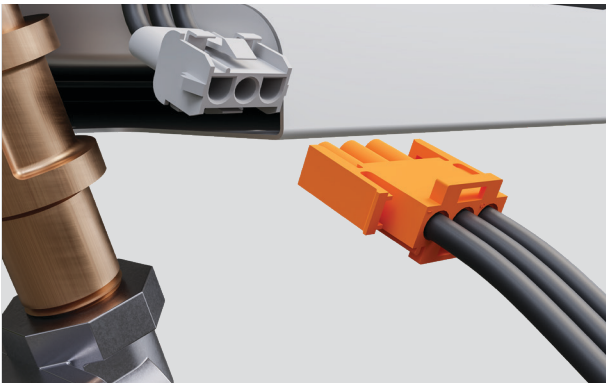

3. Connect power cable to grill. Do not connect power cable to transformer until full install is complete.

Additional DCS products can be linked to the grill by attaching a DCS Outdoor Interconnectivity kit.

INSTALL INSULATION JACKET

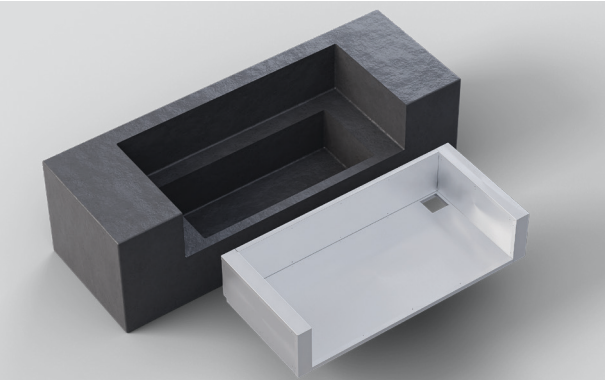

1. For jacket installation only:

Slide the insulation jacket into the cavity.

INSTALL GRILL

Take care when the lifting grill, some edges are sharp. Be careful not to trap fingers when placing the grill in the jacket.

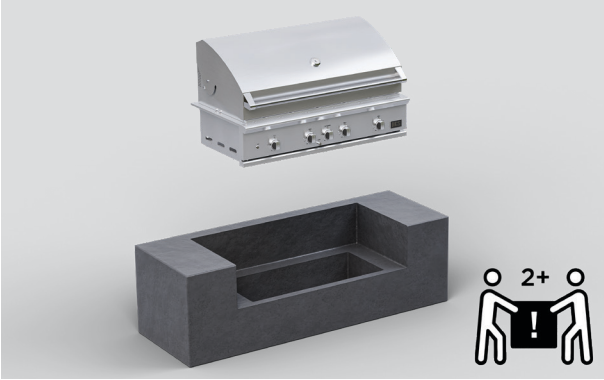

1. Do not place the grill on the ground or flat surface to prevent damaging the regulator assembly with the weight of the grill.

Lift the grill from both sides and lower into the cabinet taking care not to trap any cords or hoses under the product.

2. For jacket installation only:

Lift the grill from both sides and lower into the insulation jacket taking care not to trap any cords or hoses under the product.

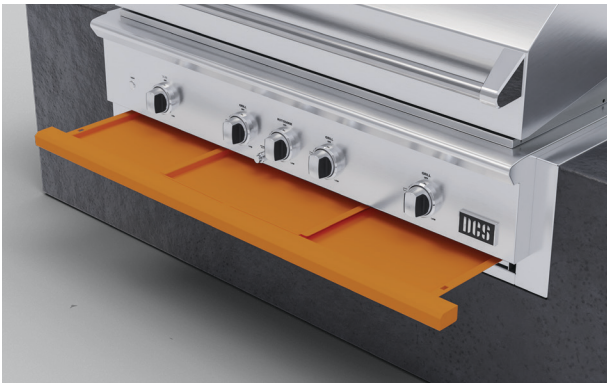

3. Re-insert the drip tray.

INSTALL ROTISSERIE MOTOR (SOME MODELS ONLY)

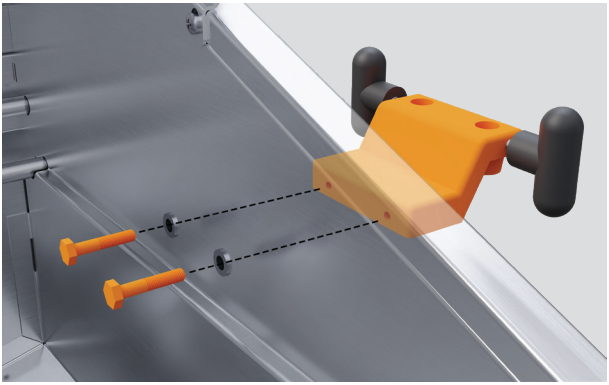

1. Secure the rotisserie mount to the side of the grill using the supplied bolts.

The mount and motor can be installed on the right or left of the grill.

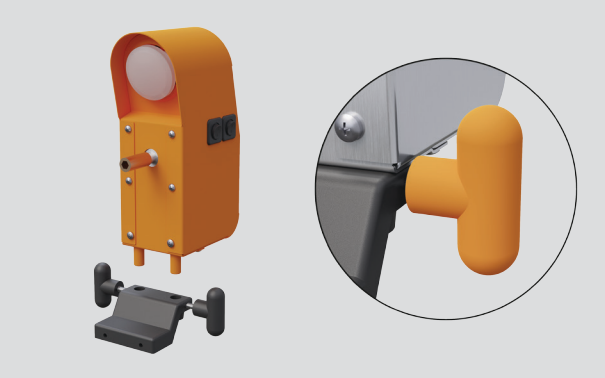

2. Place the motor onto the mount and tighten the handles at the side.

INSTALL RADIANT TRAYS

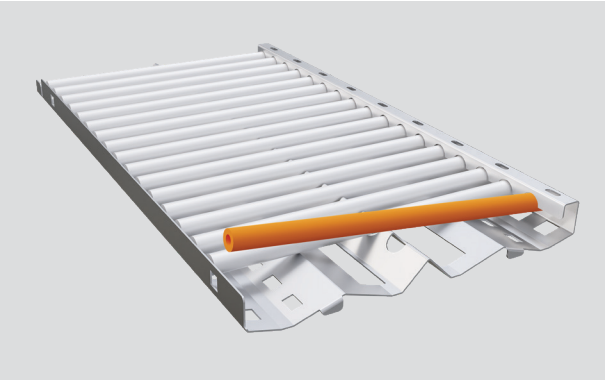

1. Place the ceramic rods into the radiant trays.

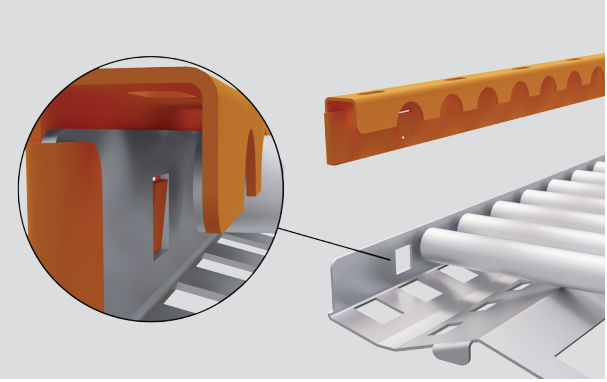

2. Lock the rods in place by pushing the side bracket into place.

3. Ensure the heat deflectors under the burners are secure before placing the radiant trays onto the pins above the burners.

The radiant trays should have a slight slope down towards the front of the grill.

INSTALL GRILL GRATES

1. Hook the grill grates over the bar at the rear of the grill and rest at the front.

The higher bar can be selected to angle the grates allowing grease to drain.

2. Sear burner models:

At the left of the grill, place the sear burner grate on the hooks at the back and rest the legs at the front.

The sear burner grate can be identified from the charcoal burner grate by its shorter front legs.

INSTALL ROTISSERIE ROD (SOME MODELS ONLY)

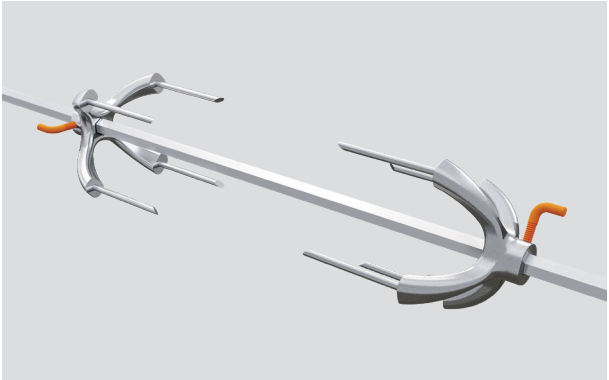

1. Slide the rotisserie forks onto the rod and tighten screws to secure.

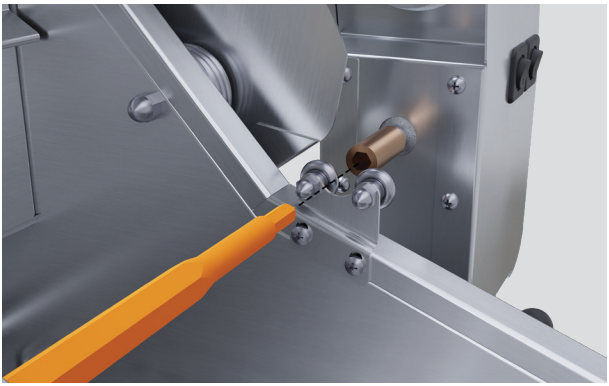

2. Push the sharp end of the rod firmly into the motor. Rest opposite end on the rollers at the end of the grill.

The rod does not rest on the rollers next to the motor.

3. The rotisserie rod can be stored under the drip tray handle.

LP GAS CYLINDER CONNECTION

Before connecting the grill to the LP cylinder, the main valve on the cylinder must be completely closed. Check that all grill burners and rotisserie valves are OFF and open grill hood.

1. Before connecting to the new cylinder, check the rubber O-ring. Do not use new cylinder if O-ring is damaged.

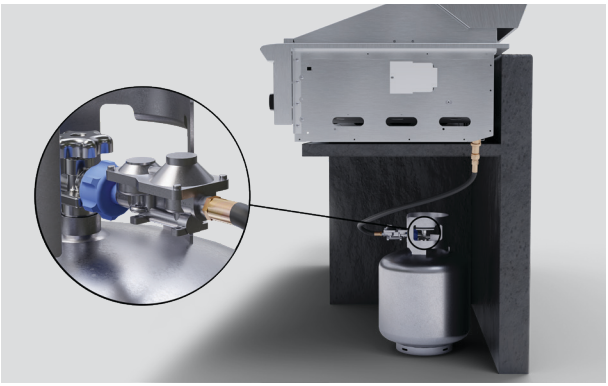

2. If O-ring is in good condition, connect the grill regulator to the gas cylinder valve and turn gas on.

Turn the burner dials on the unit to the HI position for about 20 seconds to release air.

Turn the dials off and wait five minutes before igniting the burners.

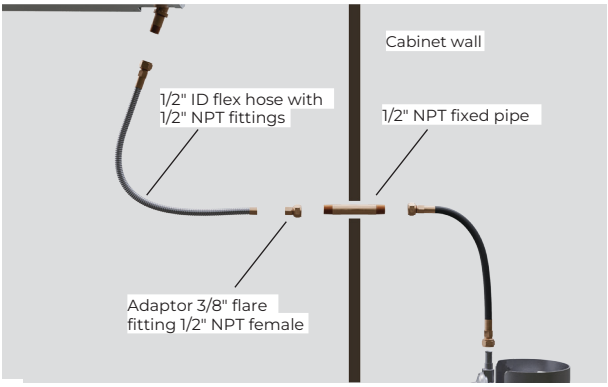

3. If the cylinder is in a separate cabinet, the installer must protect the piping for a distance of at least 2" (50mm) either side of the enclosure opening. An LP cylinder restraint must be installed prior to use (not supplied).

Gas piping and connectors must be clamped within the enclosure to avoid contact with moving parts and hot surfaces (parts are not supplied).

CONNECT TO NATURAL GAS

Check the safety and warnings section of this guide for gas regulations, requirements and important information before connecting.

1. Fittings must be connected by an authorized technician. For ease of install, attach the regulator after the grill is in position.

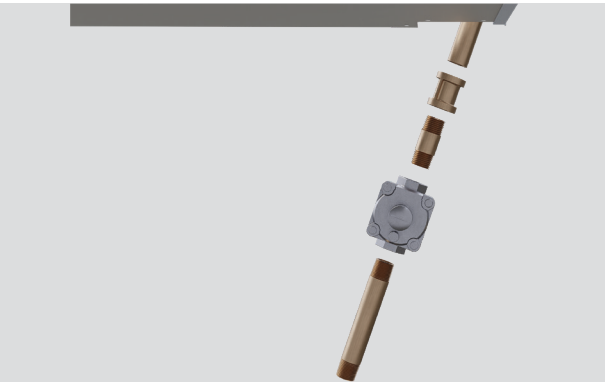

2. Ensure that the regulator arrow points in the direction of gas flow away from the gas supply.

Use threading compound on male threads only.

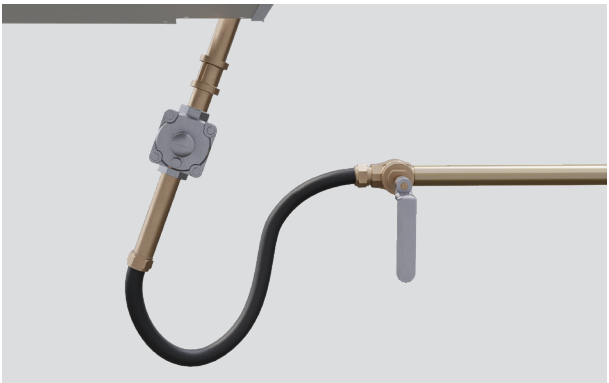

3. Natural gas must be connected by an authorized technician.

Connection: 1/2” NPT female.

Operating pressure: 4.0” W.C.

Supply pressure: 5" to 14" W.C. If in excess of 14" W.C. an installer supplied step-down regulator is required.

BULK LP INSTALLATION

If connecting an LP gas grill to an LP house gas system, your installer should follow natural gas connection guidelines.

The supplied fitted brass elbow and 2 stage LP regulator/hose assembly must be removed from the product.

If the grill is to be connected to a reticulated LP system within a house or building, an installer supplied step down regulator is required to deliver a grill operating pressure of 11.0" W.C.

An accessible manual shut-off valve must be installed. These items are not supplied.

All gas piping, fittings and connectors must comply with local authority regulations and with the standard for Connectors for Outdoor gas Appliances and Manufactured Homes, ANSI Z21.75/CSA 6.27.

LEAK TESTING

Do not smoke while leak testing and extinguish all open flames. Check with a full cylinder and make sure all dials are OFF.

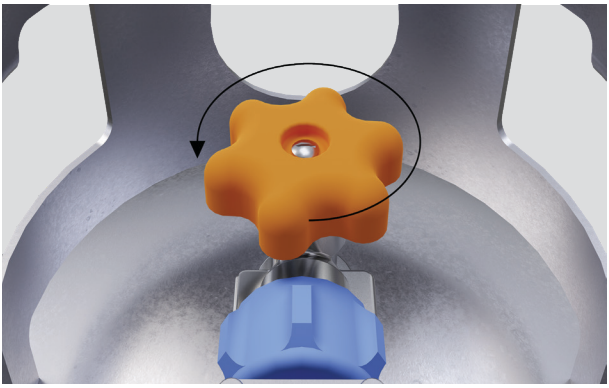

1. Open the gas cylinder valve.

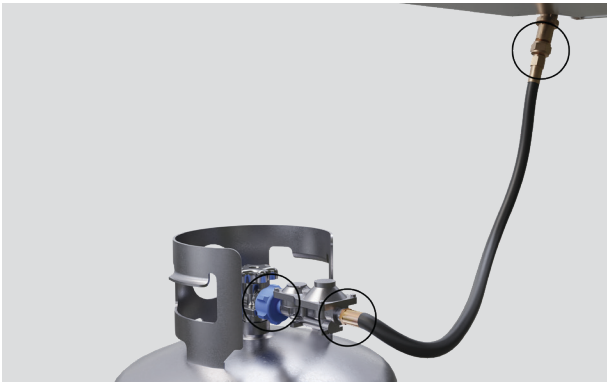

2. Apply a soap solution of 1:1 liquid soap and water to all connections, hoses and fittings from the cylinder to the connection at the grill.

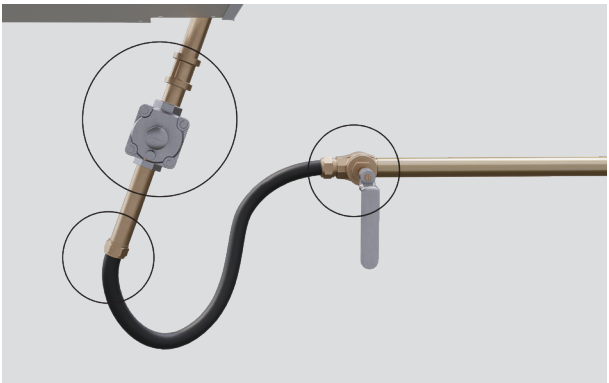

3. If a leak is present, immediately turn off the gas supply, tighten any leaking connections and re-check. If you cannot stop a gas leak, turn off the gas supply and call your local gas utility, or the dealer you purchased the appliance from.

Soap bubbles will appear where gas is escaping.

CHECK BURNERS

Each burner is tested and adjusted before shipping. It should not be necessary to make adjustments however local gas variations and altitude may effect burner performance.

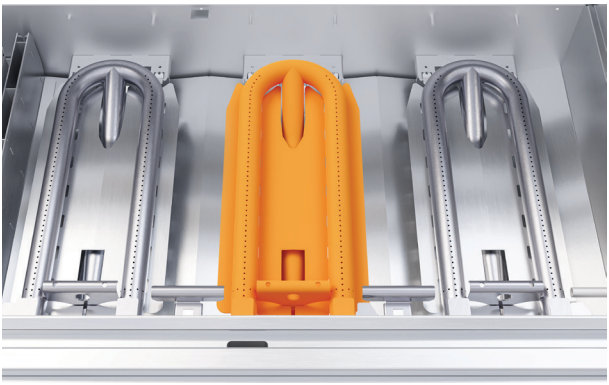

1. Remove the grill grates and radiant trays to expose the burners.

dcsappliances.com/us/trade-resources/specify

2. Light the burner. Refer to the user guide for guidance.

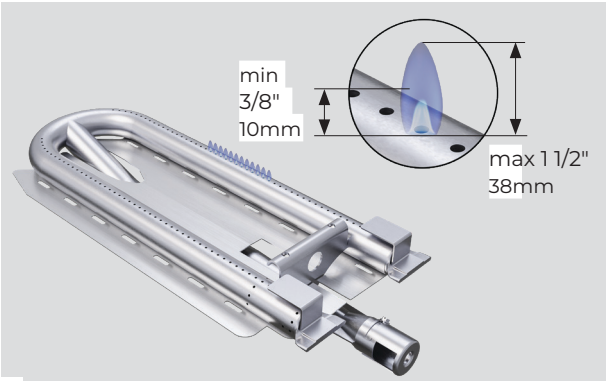

3. Flames should be blue and stable. A yellow flame indicates insufficient air. A noisy flame that lifts away from the burner indicates too much air.

Light the burner to recheck flames.

BURNER AIR INTAKE ADJUSTMENT

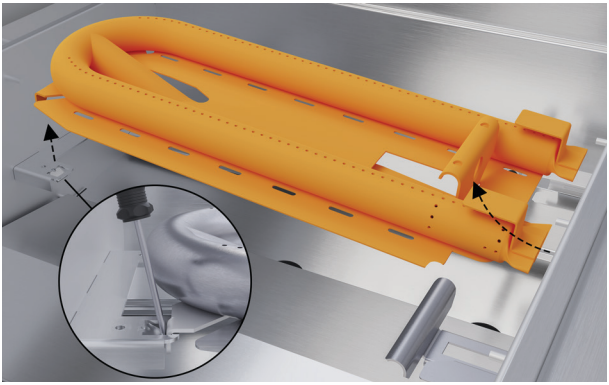

1. Turn off gas supply and ensure the burners are cool to touch.

Grip the burner and use a screwdriver to open the tab underneath. Lift the burner out and remove.

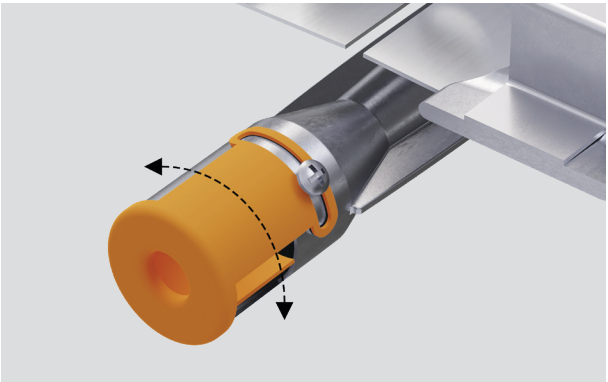

2. Using a Phillips screwdriver, loosen the burner shutter screw and turn shutter to desired position.

Turning clockwise restricts airflow. Turning counter-clockwise allows more airflow.

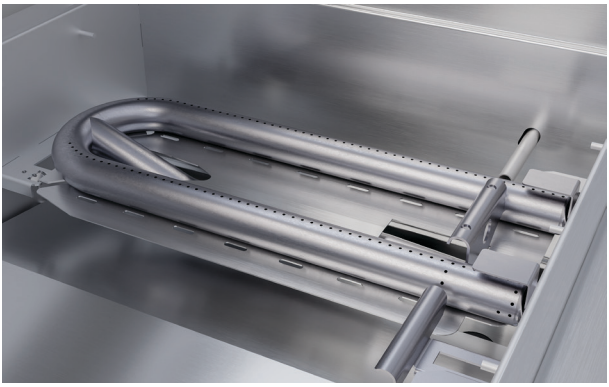

3. Refit the burner ensuring it is level and located correctly in the rear mount. Tighten the shutter screw before lighting.

Light the burner to recheck flames.

Burners must be properly located to ensure safe operation.

BURNER LOW FLAME ADJUSTMENT

Each burner is tested and adjusted before shipping. It should not be necessary to make adjustments, however local gas variations and altitude may effect burner performance at low setting.

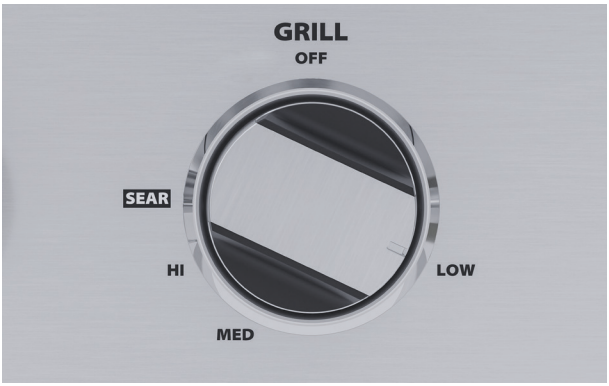

1. Light the burners before turning the dial to LOW. Pull dial to remove from the grill.

2. Hold the control valve shaft using pliers and insert a long thin flat screwdriver.

Rotate clockwise to lower, and counter-clockwise to increase flame.

3. Refit dial ensuring it is in the LOW position. Do not force.

SPECIFICATIONS

For full product, cabinetry and service specifications, refer to the Planning Guide.

To access the Planning Guide, scan the QR code or visit dcsappliances.com/us/trade-resources/specify. Search by appliance type, product name or model code.

CAVITY NON-COMBUSTIBLE

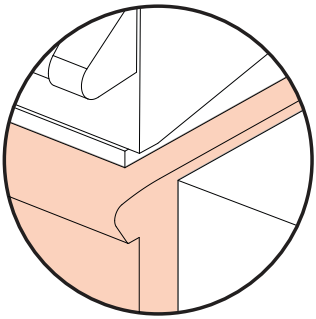

NON-COMBUSTIBLE CABINET

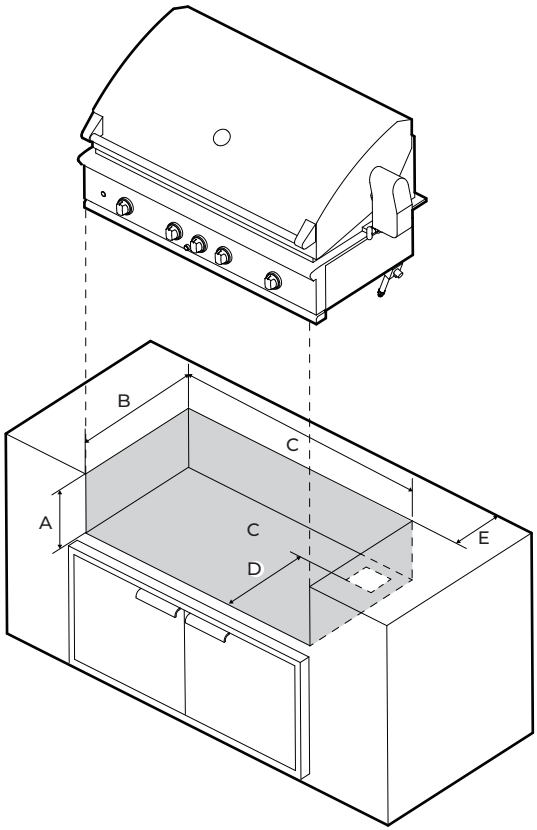

ISO VIEW

Model no: **48" Grills - BE1-48RCI, BE1-48RC, BE1-48C**

Product Dimensions

Non-combustible cabinetry		in	mm
A	Cavity height	10 1/8"	257
B	Cavity depth	22 3/4"	578
C	Cavity width	45 3/4"	1162
D	Depth to gas supply opening	18 1/2"	470
E	Minimum hood swing clearance	min 3 3/4"	min 95

36" Grills - BE1-36RCI, BE1-36RC, BE1-36C

		in	mm
A	Cavity height	10 1/8"	257
B	Cavity depth	22 3/4"	578
C	Cavity width	34 1/2"	876
D	Depth to gas supply opening	18 1/2"	470
E	Minimum hood swing clearance	min 3 3/4"	min 95

CAVITY COMBUSTIBLE

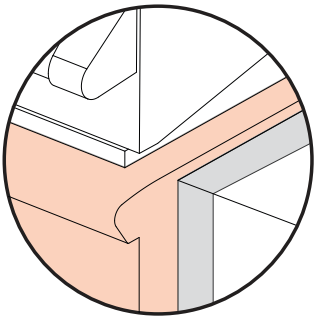

COMBUSTIBLE CABINET WITH INSULATION JACKET

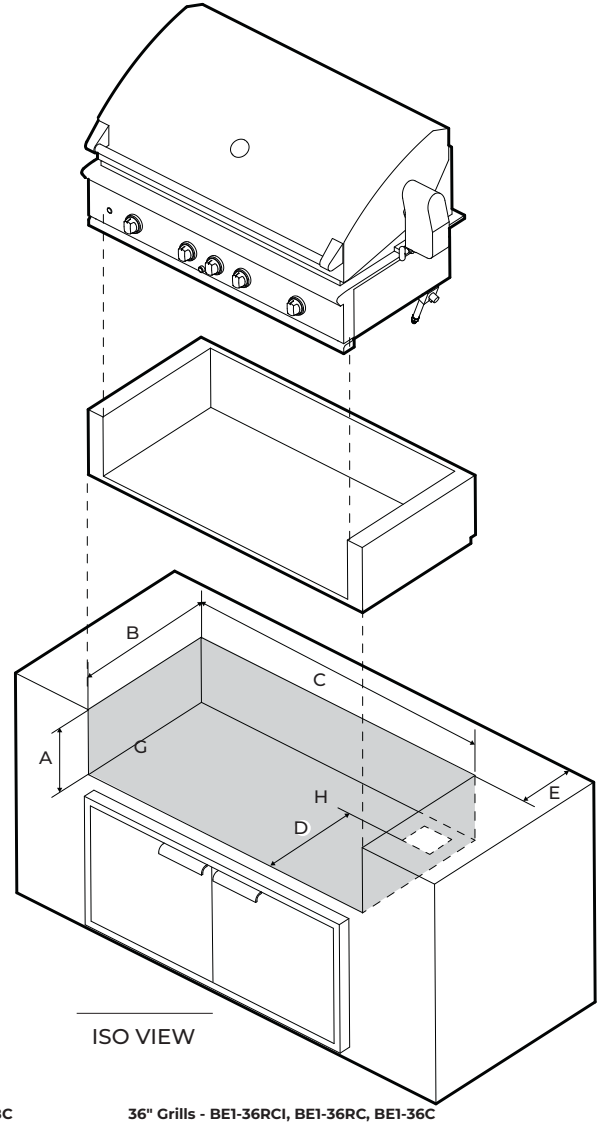

ISO VIEW

Model no: **48" Grills - BE1-48RCI, BE1-48RC, BE1-48C**

Product Dimensions

Combustible cabinetry with insulation jacket		in	mm
A	Cavity height	11 1/8"	283
B	Cavity depth	23 3/4"	603
C	Cavity width	51 7/8"	1318
D	Depth to gas supply opening	18 1/2"	470
E	Minimum hood swing clearance	min 3"	min 76

36" Grills - BE1-36RCI, BE1-36RC, BE1-36C

		in	mm
A	Cavity height	11 1/8"	283
B	Cavity depth	23 3/4"	603
C	Cavity width	40 1/2"	1029
D	Depth to gas supply opening	18 1/2"	470
E	Minimum hood swing clearance	min 2 27/32"	min 72

CLEARANCES - GRILLS

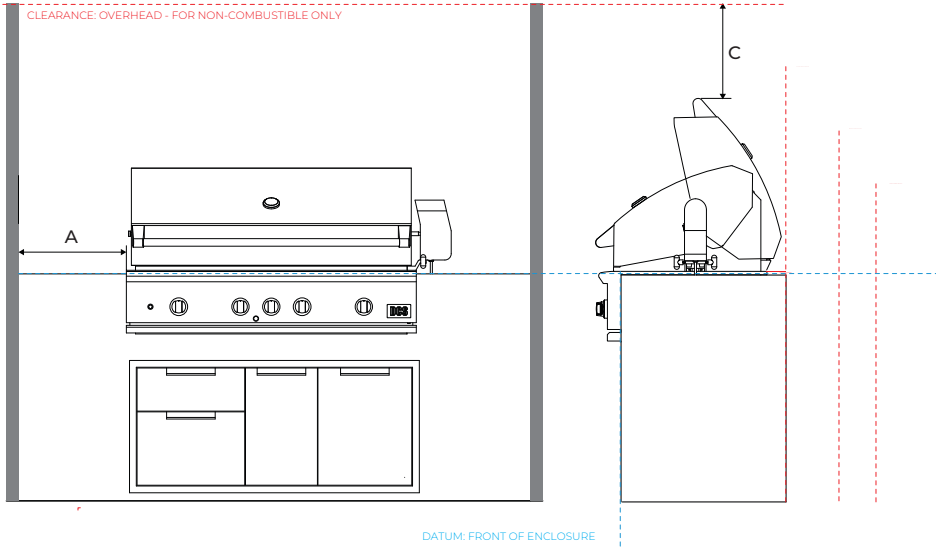

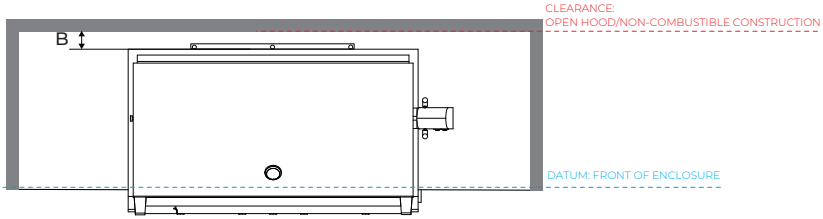

Product Dimensions

Clearance to non-combustible* surfaces		in	mm
A	Minimum clearance to sides	6"	153
B	Minimum clearance to back	3"	76
C	Minimum clearance top of open hood to surface	24"	610

Clearance to combustible** surfaces			
A	Minimum clearance to sides	18"	457
B	Minimum clearance to back	18"	457

Clearance to protected*** combustible surfaces			
A	Minimum clearance to sides	12"	305
B	Minimum clearance to back	12"	305

* Non-combustible materials are materials that are not capable of being ignited and burned consisting entirely of steel, iron, brick tile, concrete, slate and plaster.

** Combustible materials include any decorative or structural material made of wood, compressed paper, plant fibres, vinyl, plastic or other materials that are capable of transferring heat or being ignited or burned. Such materials are considered combustible even if flame proofed, fire retardant treated, surface painted or plastered. Clearances from combustible materials of minimum 18" (457mm) apply to the internal carcass of the cabinet if an insulation jacket is not used.

*** Protected combustible surfaces have a non-combustible material (minimum 4" or 102mm) in front of or covering combustible material.

NOTE: Do not install under unprotected combustible or protected combustible construction without using a fire safe ventilation system As per UL 507 and CSA C22.2 No 60335-2-31.

If the grill is to be placed into a combustible enclosure, an approved insulated jacket is necessary. Use only the DCS insulated jacket which has specifically been designed and tested for this purpose.

VENTILATION FOR LP CYLINDER ENCLOSURES

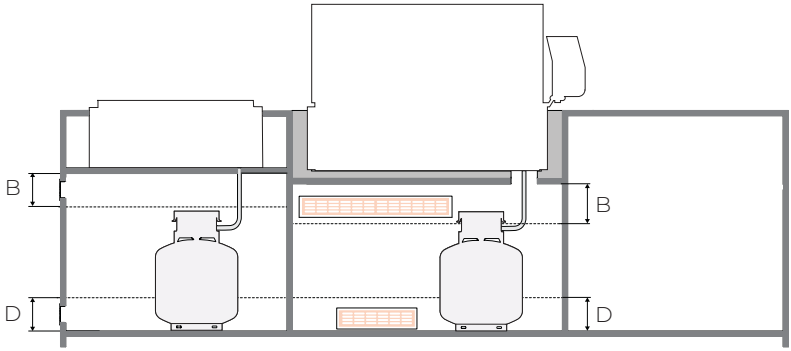

SECTION VIEW
MULTIPLE TANKS

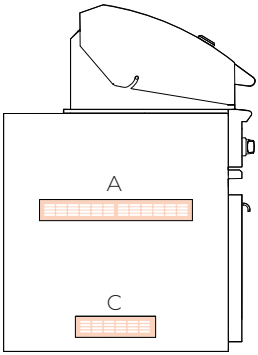

SIDE VIEW

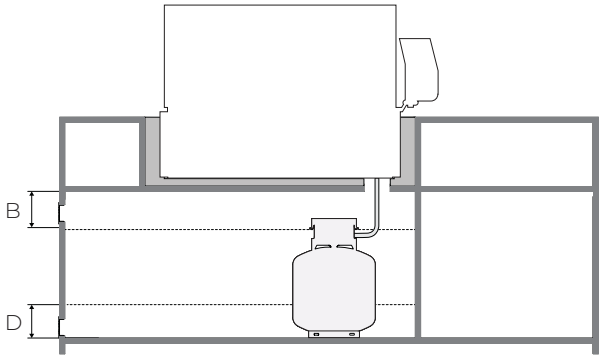

SECTION SINGLE
TANK

LP cylinder storage *ventilation requirements:

Ventilation Dimensions			
A	Upper ventilation min free area** (1"2 per lb)	20"2(20lb cylinder)	129cm2
B	Upper ventilation openings must be installed within 5" (127mm) of the top of the enclosure and unobstructed.	5"	127mm
C	Lower ventilation min free area** (1/2"2per lb)	10"2 (20lb cylinder)	64.5cm2
D	Lower ventilation openings must be installed within 5" (127mm) of the bottom of the enclosure and unobstructed.	5"	127mm

* Refer to ANSI Z21.58 Standard for Outdoor Cooking Gas Appliances, Section 4.6.2 Enclosures For Self Contained LP-Gas Supply Systems. Both upper and lower ventilation openings are required.

**Free area is the area within an opening unobstructed by grills or dampers when in operation. Every opening must be wide enough to fit a 3/16" (4.8mm) rod.

NOTE: At least one ventilation opening shall be provided on the exposed exterior side of the enclosure located within 5" (127mm) of the top of the enclosure and unobstructed. The opening(s) shall have a total free area of not less than 1"²/lb (14.2cm²/kg) of stored fuel capacity.

At least one ventilation opening shall be provided on the exposed exterior side of the enclosure 1" (25.4mm) or less from the floor level and shall have a total free area of not less than 1/2"²/lb (7.1cm²/kg) of stored fuel capacity. The upper edge shall be no more than 5" (127mm) above the floor level.

Every opening shall have a minimum dimension so as to permit the entrance of a 3/16" (4.8mm) rod.

Do not install under unprotected combustible or protected combustible construction without using a fire safe ventilation system As per UL 507 and CSA C22.2 No 60335-2-31.

WIND SCREEN PROTECTION

Wind hitting the grill while in use, (especially wind blowing into or across the hood gap exhaust) can cause poor performance. In some cases wind can cause the control panel to get hot. If wind is an issue, a windscreen shall be added.

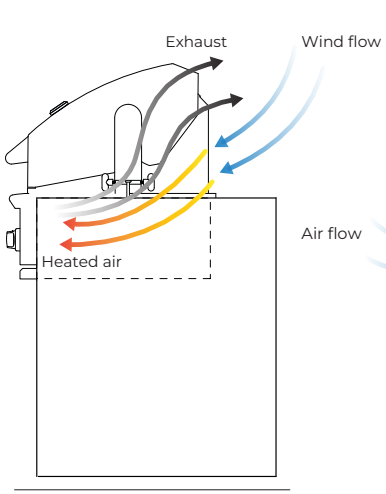

AIRFLOW WITHOUT WIND SCREEN

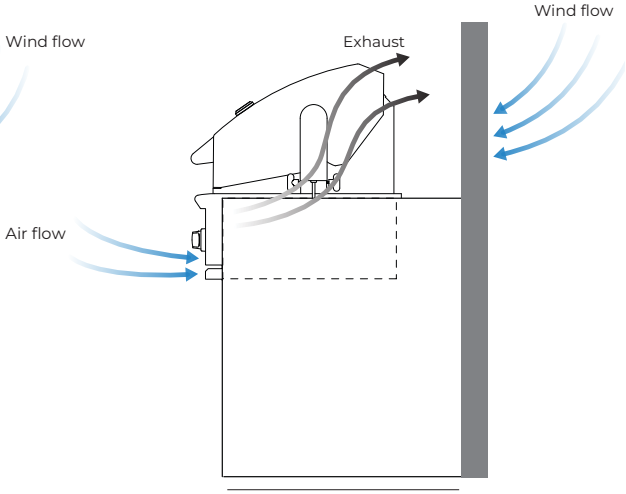

AIRFLOW WITH WIND` SCREEN

Wind protection Dimensions

	in	mm
A Minimum windscreen height	18 3/4"	476
Clearance to combustible surfaces		
B Minimum clearance to back	18"	457
Clearance to non-combustible surfaces		
B Minimum clearance to back	3"	76

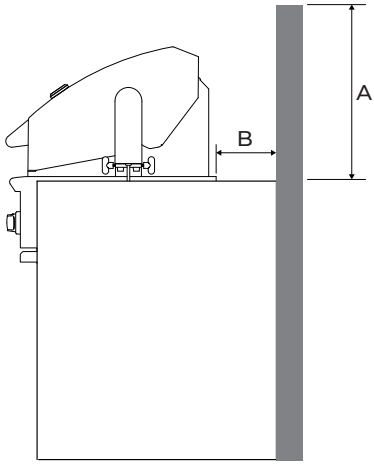

RECOMMENDED WIND SCREEN

INSTALLER CHECKLIST

- [ ] Specified clearances maintained to combustibles.
- [ ] Verified proper cylinder enclosure ventilation if cylinder is enclosed in cabinet.
- [ ] Manual shut-off valve installed and accessible for natural gas and remote LP connections.
- [ ] Transformer is tidy and mounted securely, in a suitable location.
- [ ] Gas regulator connected and set for 4.0” W.C Natural, 11.0” W.C LP gas.
- [ ] Sear burner models: ensure mesh is in place.
- [ ] Unit tested and free of leaks.
- [ ] User informed of gas supply shut-off valve location.
- [ ] Each burner lights satisfactorily.
- [ ] Drip tray in place.
- [ ] Dials turn freely.

Gas conversion kits are available from Customer care. When ordering gas conversion kits, have the model number, and the type of gas (natural or LP) from your grill.

Replacement parts can be ordered from dcsappliances.com

Please leave these instructions with the user.

User, please retain these instructions for future reference.

The model information label can be found behind the drip tray handle on the right hand side of the grill. Complete and keep for safe reference:

Model _____

Serial no. _____

Purchase date _____

Purchaser _____

Dealer address _____

Installer’s name _____

Installer’s signature _____

Installation company _____

Installation date _____

DCSAPPLIANCES.COM

© Fisher & Paykel Appliances 2024. All rights reserved.
Fisher & Paykel Appliances, 695 Town Center Drive
Suite 180, Costa Mesa, CA 92626, USA

The models shown in this guide may not be available in all markets and are subject to change at any time.

The product specifications in this guide apply to the specific products and models described at the date of issue. Under our policy of continuous product improvement, these specifications may change at any time.

For current details about model and specification availability in your country, please go to our website or contact your local DCS dealer.