Installation/Owner's Manual

Appliance Setup, Care and Operation

INSTALLER: Leave this manual with the appliance
OWNER: Retain this manual for future reference.

***NOTICE: DO NOT** discard this manual!*

outdoor lifestyles
by hearth & home technologies®

Lumonessen Series

Models:

LUM-OD-NM

LUM-OD-PM

GAS-FIRED
C UL US
LISTED
MH61458

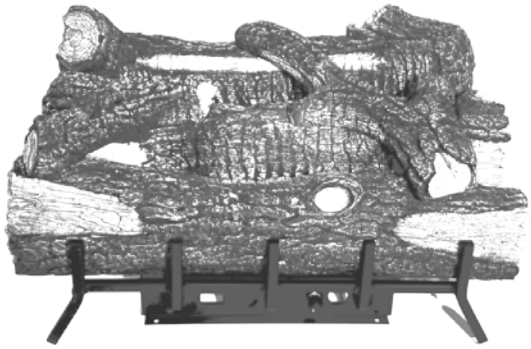

Outdoor Burner/Log Set

DANGER

FIRE OR EXPLOSION HAZARD

If you smell gas:

- Shut off gas to the appliance.
- Extinguish any open flame.
- If odor continues, leave the area immediately.
- After leaving the area, call your gas supplier or fire department.
- Failure to follow these instructions could result in fire or explosion, which could cause property damage, personal injury, or death.

WARNING

Do not store or use gasoline or other flammable vapors and liquids in the vicinity of this or any other appliance

An LP-cylinder not connected for use shall not be stored in the vicinity of this or any other appliance.

WARNING: For outdoor use only.
Installation and service must be performed by a qualified installer, service agency, or the gas supplier.

DANGER

CARBON MONOXIDE HAZARD

This appliance can produce carbon monoxide which has no odor.

Using it in an enclosed space can kill you.

Never use this appliance in an enclosed space such as a camper, tent, car or home.

WARNING: If the information in this manual is not followed exactly, a fire or explosion may result causing property damage, personal injury, or loss of life.

⚠ Safety Alert Key:

- ***DANGER!*** *Indicates a hazardous situation which, if not avoided will result in death or serious injury.*
- ***WARNING!*** *Indicates a hazardous situation which, if not avoided could result in death or serious injury.*
- ***CAUTION!*** *Indicates a hazardous situation which, if not avoided, could result in minor or moderate injury.*
- ***NOTICE:*** *Used to address practices not related to personal injury.*

Table of Contents

▶Installation Standard Work Checklist 3

1 Product Specific & Important Safety Information

A. Appliance Certification 4
B. BTU Specifications and Weight 4
C. Gas Pressures 4
D. High Altitude Installations 4
E. Non-Combustible Materials Specification. 4

2 Getting Started

A. Design and Installation Considerations 5
B. Tools and Supplies Needed 5
C. Appliance Location Requirements/Outdoor Living Space . 6
D. Inspect Appliance and Components. 7
E. Check Parts 7
F. Installation Information 7

3 Clearances & Height Requirements

A. Clearances & Height Requirements 9
B. Before Installing the Appliance 12
C. Damper Stop Installation 12
D. Assembly Procedure 13

▶ **4 Gas Information**

A. Fuel Type 14
B. Gas Pressure 14
C. Gas Connection & Gas Line Purging 14
D. Verify Gas Pressure 15

5 Gas Log Set

A. Grate & Log Installation 16
B. Log Placement (Mezmer). 17
C. Log Placement (Mountain Oak-18) 18
D. Log Placement (Mountain Oak-24/30) 19
E. Flame Appearance 20
F. Operating Instructions 20

6 Owner's Manual

A. Congratulations 22
B. Limited Lifetime Warranty. 23

7 Product Specification Information

A. Application Certification 25
B. BTU Specifications and Weight 25

8 Important Safety & Operating Information

A. Appliance Safety 26
B. General Operating Parts 28
C. Fuel Specifications 28
D. Before Lighting Appliance. 28

9 Lighting Instructions

A. Manual Valve 29
B. Lighting Instructions 31
C. Initial Use 33

10 Maintenance & Service

A. Maintenance: Frequency & Tasks 34
B. Maintenance Tasks: Qualified Service Technician 34
C. Burner Ignition & Operation 34
D. Cleaning & Servicing 35

11 Troubleshooting

A. Manual Valve Control System 36

12 Service Parts & Accessories

A. Service Parts 37
B. Massachusetts Residents Only 47
C. Contact Information 48

NOTE: Our gas logs are hand painted for ultimate beauty and realism. As a result, some variation in color and shading will occur from set to set. This is intentional and designed to make each product unique, as found in nature.

Installation Standard Work Checklist

ATTENTION INSTALLER:

Follow this Standard Work Checklist

This standard work checklist is to be used by the installer in conjunction with, not instead of, the instructions contained in this installation manual.

Customer: _____

Lot/Address: _____

_____

Model (circle one): **LUM-OD-NM, LUM-OD-PM**

Date Installed: _____

Location of Fireplace: _____

Installer: _____

Dealer/Distributor Phone # _____

Serial #: _____

WARNING! Risk of Fire or Explosion! *Failure to install appliance according to these instructions could lead to a fire or explosion.*

Gas Log Install Sections 2	**YES**	**IF NO, WHY?**
Verified that the chimney has been cleaned. (pg. 12)	☐	_____
Verified clearances to combustibles.	☐	_____
Gas Logs are leveled and secured.	☐	_____
See page 7 for adequate provisions for combustion and	☐	_____
ventilation air have been verified.	☐	_____

Gas Section 4		
Proper appliance for fuel type.	☐	_____
Leak check performed and inlet pressure verified.	☐	_____
Verified proper air shutter setting for installation type.	☐	_____

Embers & Logs Section 5		
		_____
All packaging and protective materials removed (inside & outside of appliance).	☐	_____
Embers and logs installed correctly.	☐	_____
Accessories installed properly.	☐	

Finishing Section 3		
		_____
Verified all clearances meet installation manual requirements.	☐	_____
Mantels and wall projections comply with installation manual requirements.	☐	

Manual bag and all of its contents are removed and the log set given to party responsible for use and operation.	☐	_____
Started log set and verified no gas leaks exist.	☐	_____

Hearth & Home Technologies recommends the following:

- Photographing the installation and copying this checklist for your file.
- That this checklist remain visible at all times on the appliance until the installation is complete.

Comments: Further description of the issues, who is responsible (Installer/ Builder/ Other Trades, etc) and corrective action needed _____

Comments Communicated to party responsible _____ by _____ on _____

(Builder / Gen. Contractor/) (Installer) (Date)

➔ = Contains updated information.

4629-982C 6/25

1 Product Specific and Important Safety Information

A. Appliance Certification

MODEL: LUM-OD-NM, LUM-OD-PM
LABORATORY: Underwriters Laboratory (UL)
TYPE: **Outdoor Decorative Gas Appliance**
STANDARD: **ANSI Z21.97-2017, CSA 2.41-2017**

This product is listed to ANSI standards for "Outdoor Decorative Gas Appliances" and "Gas Fired Appliances for Use at High Altitude."

NOTICE: *This installation must conform with local codes. In the absence of local codes you must comply with the National Fuel Gas Code, ANSI Z223.1-latest edition in the U.S.A.*

NOT INTENDED FOR USE AS A PRIMARY HEAT SOURCE. This appliance is tested and approved as either supplemental room heater or as a decorative appliance. It should not be factored as primary heat in residential heating calculations.

B. BTU Specifications and Weight

Models		Maximum Input BTU/h	Minimum Input BTU/h	Orifice	Weight Pounds
LUM-OD-NM	*(0-2000 FT)*	38,000	19,000	.136 in (3.45mm) #29	7
LUM-OD-PM	*(0-2000 FT)*	38,000	31,000	.0.78 in (1.98mm) #47	7

NOTE: For LP models an external regulator is required to reduce supply pressure to a maximum of 13" w.c.

C. Gas Pressures

	NATURAL	PROPANE (LP)
Inlet Minimum	5.0" w.c.	11.0" w.c.
Inlet Maximum	10.5" w.c.	13.0" w.c.
Gas Valve Manifold Pressure Setting	3.5" w.c.	10" w.c.

NATURAL GAS: An external regulator is required to reduce supply pressure to a maximum of 10½" w.c. on natural gas systems operating at higher pressure.

PROPANE/LPG: An external regulator is required to reduce supply pressure to a maximum of 13" w.c.

D. High Altitude Installations

NOTICE: *If the heating value of the gas has been reduced, these rules do not apply. Check with your local gas utility or authorities having jurisdiction.*

When installing above 2000 feet elevation: Reduce input rate 4% for each 1000 feet above sea level.

Check with your local gas utility to determine proper orifice size.

E. Non-Combustible Materials Specification

Material which will not ignite and burn. Such materials are those consisting entirely of steel, iron, brick, tile, concrete, slate, glass or plasters, or any combination thereof.

Materials that are reported as passing **ASTM E 136, Standard Test Method for Behavior of Materials in a Vertical Tube Furnace at 750 ºC** shall be considered non-combustible materials**.**

2 Getting Started

A. Design and Installation Considerations

Installation MUST comply with local, regional, state and national codes and regulations. Consult insurance carrier, local building inspector, fire officials or authorities having jurisdiction over restrictions, installation inspection and permits.

Before installing, determine the following:

- Where burner assembly and log set are to be installed.
- Gas supply piping.
- Approved wood burning masonry fireplace or vent-free fireplace.

The Lumonessen outdoor series gas appliance is designed for outdoor use and may be installed as a stand alone appliance or built into a wall.

Outdoor spaces - For the purpose of these instructions, an appliance is considered to be outdoors if installed with shelter no more inclusive than:

1. With walls on all sides, but no overhead cover
2. Within a partial enclosure which includes an overhead cover and no more than two side walls. These side walls may be parallel, as in a breezeway, or at right angles to each other; or
3. Within a partial enclosure which includes an overhead cover and three sidewalls, as long as 30 % or more of the horizontal periphery of the enclosure is permanently open.

NOTE: Screen may be used on the open sides of the shelter. 14x18 and 16x18 screen mesh is approved for use. DO NOT use solar screen or no-see-um screen.

NOTE: See page 6 for additional information on appliance location requirements for outdoor living spaces.

The appliance may be installed on a wood or non-combustible deck.

Refer to section three for clearances.

Installation MUST comply with local, regional, state and national codes and regulations. Consult the authorities having jurisdiction over restrictions, installation inspection and permits.

Before installing, determine the following:

- Where the appliance is to be installed.
  - Clearances to side walls.
  - Location of indoor appliance terminations, air inlets, gas meters, etc.
  - Location of the appliance to a door that swings open to ensure it doesn't interfere with the appliance when opened
  - Location of Windows.
  - Location of Walkways.
  - Possibility of flooding or running water.
- Gas supply piping requirements.
- Framing and finishing details.

myhht FACTORY training

Installation and service of this appliance should be performed by qualified personnel. Hearth & Home Technologies recommends HHT Factory Trained or NFI certified professionals.

NFI NATIONAL FIREPLACE INSTITUTE

Improper installation, adjustment, alteration, service or maintenance can cause injury or property damage. For assistance or additional information, consult a qualified service technician, service agency or your dealer.

B. Tools and Supplies Needed

Before beginning the installation be sure that the following tools and building supplies are available.

- Tape measure
- Gloves
- Voltmeter
- Manometer
- Phillips screwdriver
- Safety glasses
- Flat blade screwdriver
- Soapy water solution for gas leak testing
- Electric drill and bits (1/4 in. magnetic)
- External regulator (for propane/LPG only & 1/2 psi Natural gas system)
- Piping which complies with local codes
- Pipe sealant approved for use with propane/LPG (Resistant to sulfur compounds)
- Manual shutoff valve
- Sediment trap
- Tee joint
- Pipe wrench

CAUTION

Gloves are recommended when handling refractory and logs to prevent skin irritation from loose fibers. Logs are fragile; handle with care.

C. Appliance Location Requirements in Outdoor Living Space

How to Calculate the Minimum Opening Needed In an Outdoor Living Space

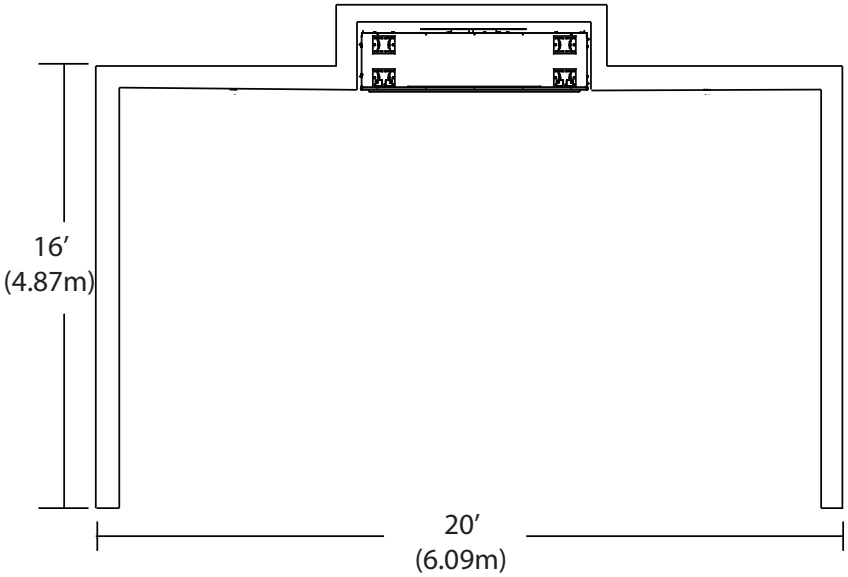

30% (or .30) of the outdoor living space periphery needs to be open.

1. Add lengths of the outside living space.
   16′+20′+16′+20′=72′

2. Divide the open area length by the total outdoor living space.
   20/72=**.28**

.28 is less than the .30 required and therefore this installation would not be approved.

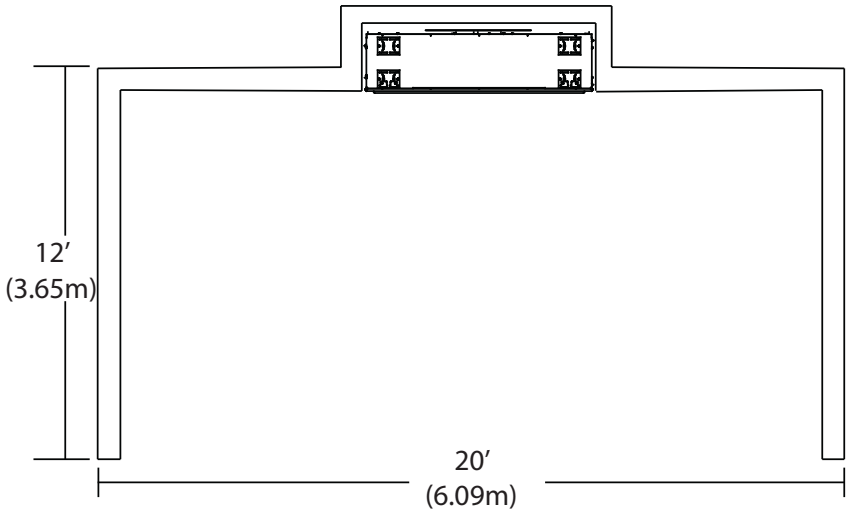

1. Add lengths of the outside living space.
   12′+20′+12′+20′=64′
2. Divide the open area length by the total outdoor living space.
   20/64=**.31**

.31 is greater than the .30 required and therefore this installation would be approved.

Figure 2.1 - Outdoor Living Space

D. Inspect Appliance and Components

- Carefully remove the appliance and components from the packaging.
- Logs are packaged and sold separately.
- Report to your dealer any parts damaged in shipment.
- **Read all of the instructions before starting the installation. Follow these instructions carefully during the installation to ensure maximum safety and benefit.**

WARNING! Risk of Fire or Explosion! *Damaged parts could impair safe operation.* ***DO NOT*** *install damaged, incomplete or substitute components. Keep appliance dry.*

Hearth & Home Technologies disclaims any responsibility for, and the warranty will be voided by, the following actions:

- Installation and use of any damaged appliance.
- Modification of the appliance.
- Installation other than as instructed by Hearth & Home Technologies.
- Installation and/or use of any component part not approved by Hearth & Home Technologies.

Any such action may cause a fire hazard.

WARNING! Risk of Fire, Explosion or Electric Shock! ***DO NOT*** *use this appliance if any part has been under water. Call a qualified service technician to inspect the appliance and to replace any part of the control system and/or gas control which has been under water.*

⚠ WARNING: This product and the fuels used to operate this product (liquid propane or natural gas), and the products of combustion of such fuels, can expose you to chemicals including benzene, which is known to the State of California to cause cancer and reproductive harm. For more information go to: www.P65Warnings.ca.gov.

E. Check Parts

Verify contents to ensure you have received all parts. You should have the following:

LUM-OD-NM and LUM-OD-PM Models

- Unvented gas log burner assembly
- Two (2) bags of crushed volcanic rock
- Installation/operating instructions
- Two (2) anchoring screws
- Ceramic fiber logs (sold separately)

Carefully inspect the contents for shipping damage. If any parts are missing or damaged, immediately inform the dealer from whom you purchased the appliance. **Do not attempt to install any part of the appliance unless you have all parts in good condition.**

F. Installation Information

⚠ WARNING

This appliance is for installation only in a solid-fuel burning masonry or UL127 factory-built fireplace or in listed ventless firebox enclosure. It has been design certified for these installations.

Exception: **DO NOT install this appliance in a factory-built fireplace that includes instructions stating it has not been tested or should not be used with unvented gas logs.**

Use manufacturer's installation and clearance requirements as defined in their manual.

This Gas-Fired Unvented Gas Log Type Room Heater is approved for installation into a CSA/ANSI Z21.91:20 listed Ventless Firebox Enclosure for Gas-Fired Unvented Gas Log Type Room Heaters, so long as the firebox hearth dimensions meet the minimum hearth dimensions listed in this manual.

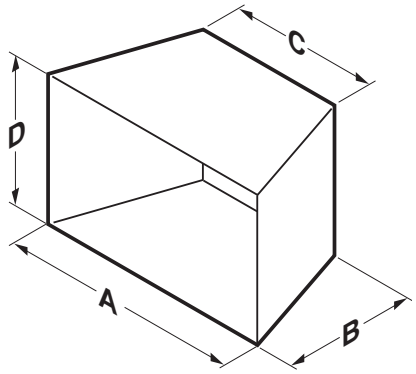

Minimum Hearth Dimensions — Inches

Model		A	B	C	D
LUM-OD-NM, LUM-OD-PM with 18, 24 or 30 in. logs	18	26 (660mm)	13 (330mm)	18 (457mm)	17 (432mm)
	24	29 (737mm)	13 (330mm)	22.25 (571mm)	17 (432mm)
	30	33 (838mm)	13 (330mm)	22.25 (571mm)	17 (432mm)

Figure 2.2 - Minimum Dimensions for Engine, Logs & Firebox

Placement in Fireplace with a Restrictive Barrier

The following are guidelines for placing a gas log set in a fireplace that has a restrictive barrier on the fireplace for vented appliance only. See Figure 2.3.

Height of Restriction (x)	Minimum Depth of Fireplace/Firebox
No Restriction	14" (356mm)
0" to 3" (76mm)	16" (406mm)
Greater than 3" (76mm)	*

**Any barrier greater than 3" placed in front of the gas log set is not recommended by the manufacturer.*

NOTE: Non-combustible material such as refractory brick may be used to line the floor of the fireplace in order to raise the height of the gas log set in relation to a restrictive barrier. If the unit is raised, the minimum height dimension listed in the homeowner's manual must be met or exceeded.

⚠ WARNING

Barriers such as the bottom of a glass door frame placed in front of a gas log set can change the air flow characteristics of the fireplace which in turn can cause the unit to overheat and malfunction when installed as a vented log set.

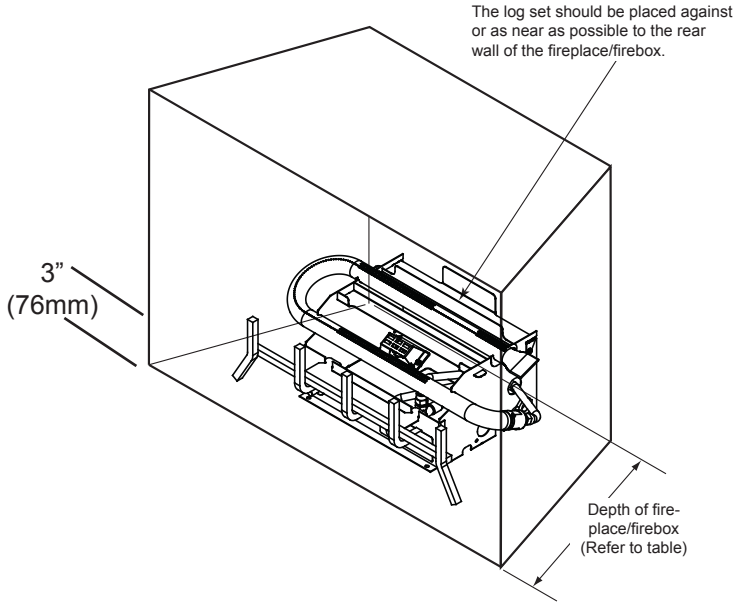

Figure 2.3 - Reference Drawing of a Lumonessen Log Set in an Enclosure

⚠ WARNING

Do not install the heater:

- **Where curtains, furniture, clothing, or other flammable objects are less than 36" from the front of the heater.**
- **In high traffic areas.**
- **In windy or drafty areas.**

⚠ WARNING

Gloves are recommended when handling logs to prevent skin irritation from loose fibers. Logs are fragile—handle with care.

⚠ WARNING

If the area in which the heater may be operated does not meet the required volume for indoor combustion air, combustion and ventilation air shall be provided by one of the methods described in the *National Fuel Gas Code, ANSI Z223.1/NFPA 54*, the *International Fuel Gas Code* or applicable local codes.

3 Clearances and Height Requirements

A. Clearances and Height Requirements

⚠ WARNING

The dimensions shown in *Figures 3.1 through 3.8* and defined in the fireplace manufacturer's instructions are minimum clearances to maintain when installing this heater. Left and right clearances are determined when facing the front of the heater.

When heater is installed into a ventless firebox, minimum clearances, as specified by the ventless firebox manufacturer, must be met.

Follow these instructions carefully to ensure safe installation. Failure to follow instructions exactly can create a fire hazard.

Sidewall and ceiling clearances: The ***sides*** of the fireplace opening must be ***at least 9"*** from any combustible wall. The ***ceiling*** must be ***at least 42"*** from the top of the fireplace opening.

Heat resistant material (minimum requirements) with no wooden mantel or other combustible projection:

To install the gas logs into a fireplace with no wooden mantel, shelf or other combustible projection above the fireplace opening, measure the heat resistant material height, *according to Figure 3.2 and* ***TABLE A***.

Heat resistant materials such as slate and marble must **be at least 1/2" thick. Sheet metal should not be installed onto combustible material.**

IMPORTANT: If you cannot meet these minimum clearances you must operate the heater with chimney flue damper open. Refer to “Installing Vented Applications” found on page 13.

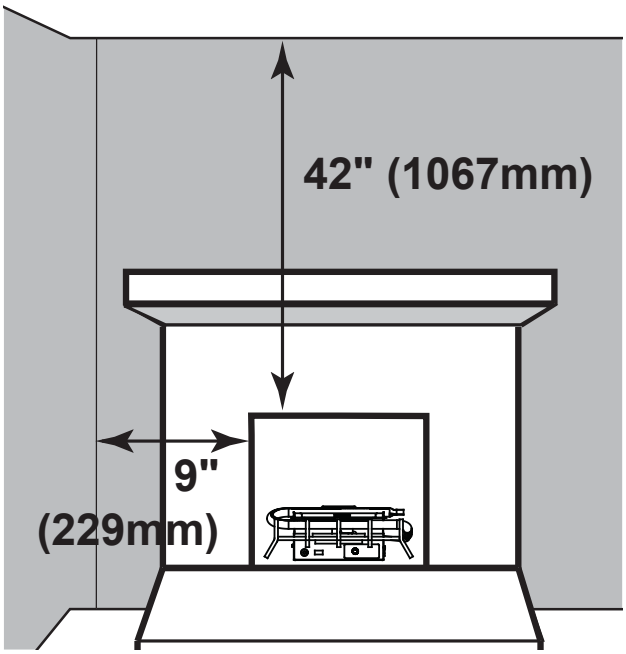

Figure 3.1 - Sidewall and Ceiling Clearances

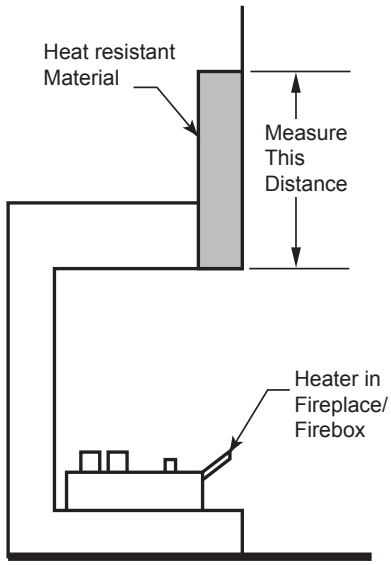

Figure 3.2 - Measure Heat Resistant Material

Table A — Heat Resistant Material Requirements with No Mantel or Combustible Projection

Heat Resistant Material Measurement	Requirements for Safe Installation
12" (305mm) or more	Hood not required
8" (203mm) or less than 12" (305mm)	Extend heat resistant material to 12" or install hood. *Figure 3.3*
Less than 8" (203mm)	Extend heat resistant material to 8" AND install hood *Figure 3.4*. **OR** Extend heat resistant material to a height of at least 12".

Heat resistant material (minimum requirements) with wooden mantel or other combustible projection:

To install the heater with a wooden mantel, shelf or other combustible projection above, first measure the heat resistant material shown in *Figure 3.3,* then refer to Table B.

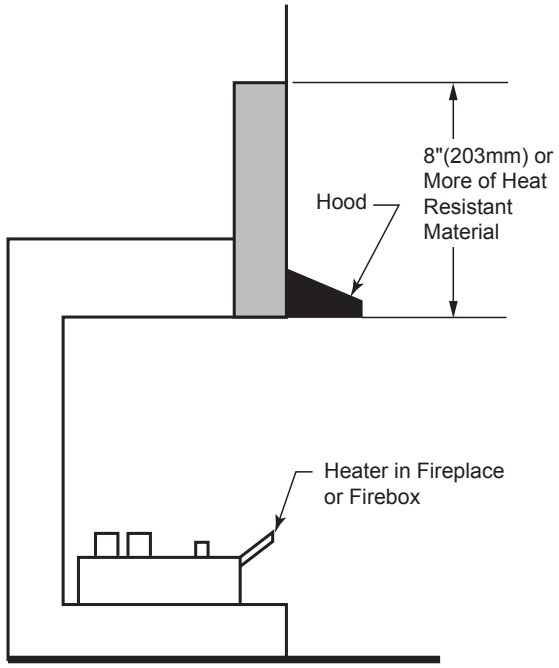

Figure 3.3 - Measuring Heat Resistant Material for Mantel

Table B - Heat Resistant Material Requirements Height and Mantel Location

Heat Resistant Material Measurement	Requirements for Safe Installation with Wooden Mantel, Shelf or other Combustible Projection
12" (305mm) or more	Hood not required. Observe profiles (side elevations) shown in *Figure 3.5*.
8" (203mm) or less than 12" (305mm)	Install hood and observe profiles shown in *Figure 3.4* **OR** Extend heat resistant material to at least 12" and observe profiles shown in Figure 3.5.
Less than 8" (203mm)	Extend heat resistant material to at least 8", install hood and observe profiles shown in *Figure 3.4* . **OR** Extend heat resistant material to at least 12" and observe profiles shown in *Figure 3.5*.

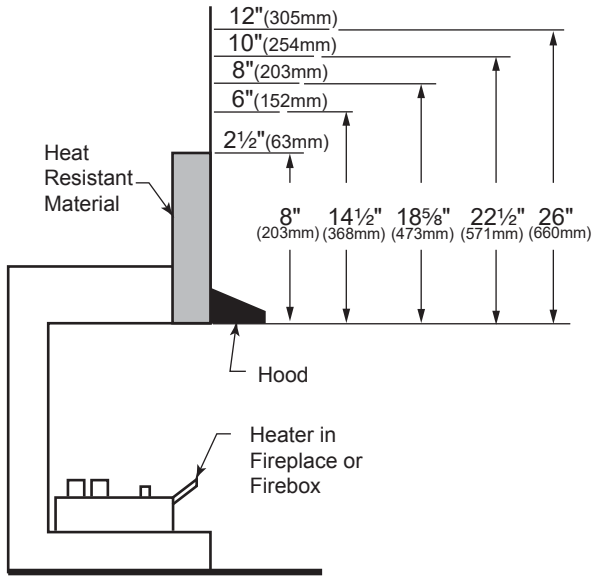

Figure 3.4 - Minimum Mantel Clearance with Hood — All Models

Example: A mantel may project from the wall a **maximum** of 2½" at a **minimum** of 8" above the opening, and a maximum of 6" at a **minimum** of 14½" above the opening.

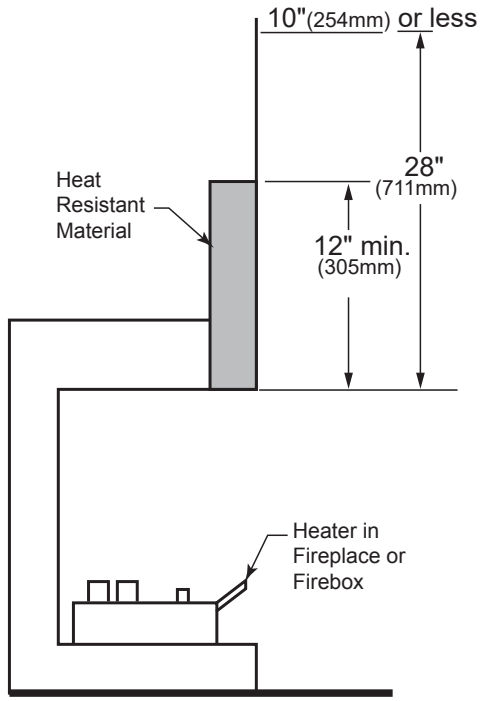

Figure 3.5 -Minimum Mantel Clearance with No Hood

Example: The bottom of the mantel may project from the wall a maximum of 10" at a minimum of 28" above the opening.

The gas log heater must be installed at least 1⅜" above any combustible flooring material, such as carpeting, which is closer than 14" to the base of the fireplace. The minimum distance must be maintained from the top surface of carpeting, etc. *Figure 3.6*

OR

The gas log heater may be installed nearer to the floor if a minimum of 14" of noncombustible material such as slate or marble is installed between the base of the fireplace and the combustible flooring. *Figure 3.7*

Vinyl Flooring

Vinyl Flooring is sensitive to heat. A 14 inch minimum depth hearth extension is recommended when using vinyl flooring up to the wall. See Figure 3.7.

NOTICE: Clearances that do not meet the minimum guidelines could result in damage or buckling to the vinyl flooring and is done at the installer's or homeowner's risk.

Hearth & Home Technologies does not recommend adhesive based vinyl flooring due to thermal expansion. Floating-style flooring can be used, but will reach temperatures up to 110°F in a room with ambient temperature of 70°F. Consult flooring specifications to ensure compatibility.

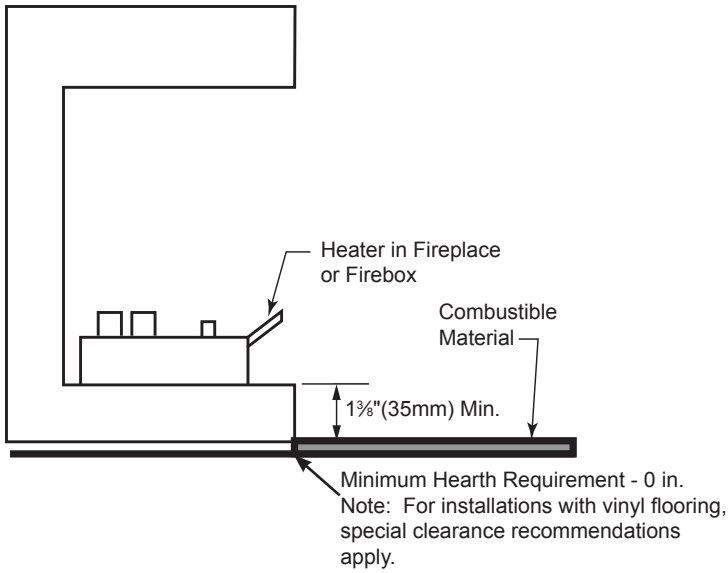

Figure 3.6 - Minimum Clearance above Combustible Flooring

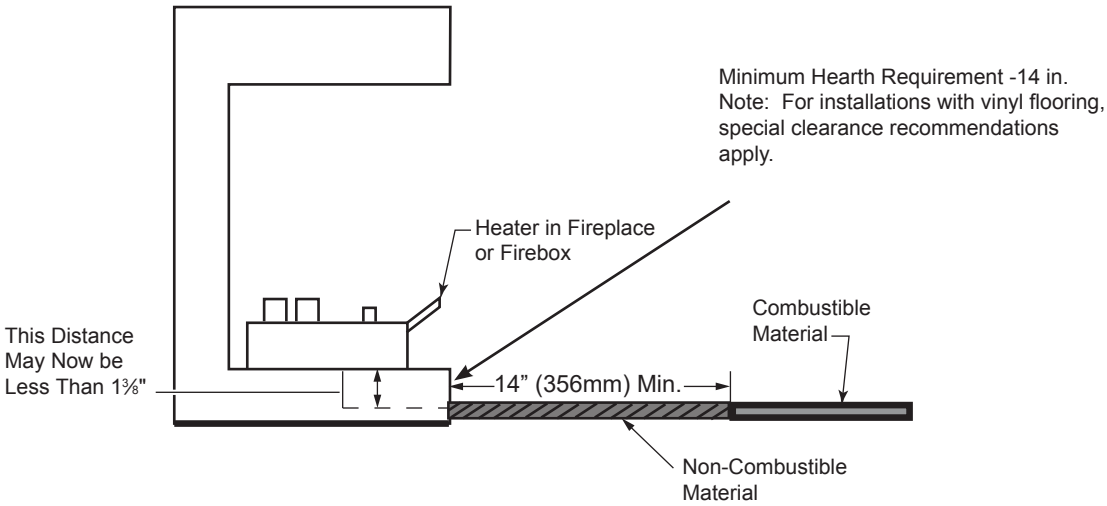

Figure 3.7 - Minimum Clearance above Combustible Flooring with Non-combustible Material Installed at Base of Fireplace

⚠ WARNING

Before installing in a solid fuel burning fireplace, The chimney flue and firebox must be cleaned of soot, creosote, ashes and loose paint by a qualified chimney cleaner.

⚠ WARNING

This log set can be installed in a solid fuel burning fireplace (masonry fireplace or manufactured fireplace) with a working flue and constructed of non combustible material or in a vent-free firebox.

Exception: **DO NOT install this appliance in a factory-built fireplace that includes instructions stating that it has not been tested or should not be used with unvented gas logs. This log set may be installed as a vented log set.**

⚠ WARNING

The use of thermostat is not allowed on vented log application. It is only allowed on unvented room heater classification.

Before Fully Installing the Unit:

- Turn **OFF** the gas supply to the fireplace or firebox.
- Seal any fresh air vents and/or ash clean-out doors located on the floor or wall of the fireplace. If left unsealed, drafting may cause pilot outage or sooting. Use a heat resistant sealant. **Do not seal the chimney flue damper.**

Vented Application Installations —

Since, the gas logs are operated with the damper open, non-combustible material and minimum mantel requirements do not apply.

NOTE: The use of a thermostat is prohibited in vented log installations.

B. Before Installing the Appliance:

- Turn off gas supply to fireplace or firebox.
- Have the fireplace floor and chimney professionally cleaned to remove ashes, soot, creosote or other obstructions. Have this cleaning performed annually after installation.
- Seal any fresh air vents or ash clean-out doors located on floor or wall of fireplace. If not, drafting may cause pilot outage or sooting. Use a heat-resistant sealant.

Install and operate the appliance as directed in this manual.

C. Damper Stop Installation:

A damper stop must be provided with the unit. Contact your dealer to obtain one. The damper stop must be installed as shown in *Figure 3.8* to prevent full closure of the fireplace damper blade and provide a minimum 29 square inch flue opening.

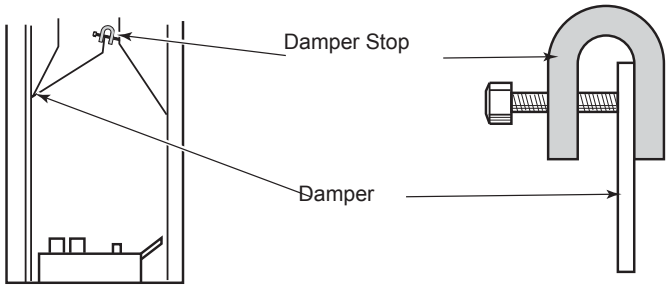

Figure 3.8 - Damper Stop Installation.

⚠ WARNING

When this log set is installed in a vented application, the damper must be clamped to be fully open.

D. Assembly Procedure

1. Center the burner assembly inside the fireplace or firebox. Make certain that the front of the burner assembly sits inside the front edge of the fireplace or the firebox. Burner assembly should be as far to back of box as possible.
2. Anchor holes are located on the right and left sides of the front bracket attached to the engine base. After centering the burner assembly correctly, mark the holes on the fireplace or firebox floor. Drill two (2) 5/32" diameter holes in the floor of the firebox. Anchor the two anchoring screws shipped with the unit using Phillips head chuck and secure the burner assembly to the fireplace through the holes drilled earlier.

⚠ WARNING

You must secure the gas log heater to the fireplace floor. If not, the entire unit may move when you adjust the controls. Movement of unit may cause shifting of the gas logs which leads to sooting and improper burning. Grate movement could cause a gas leak.

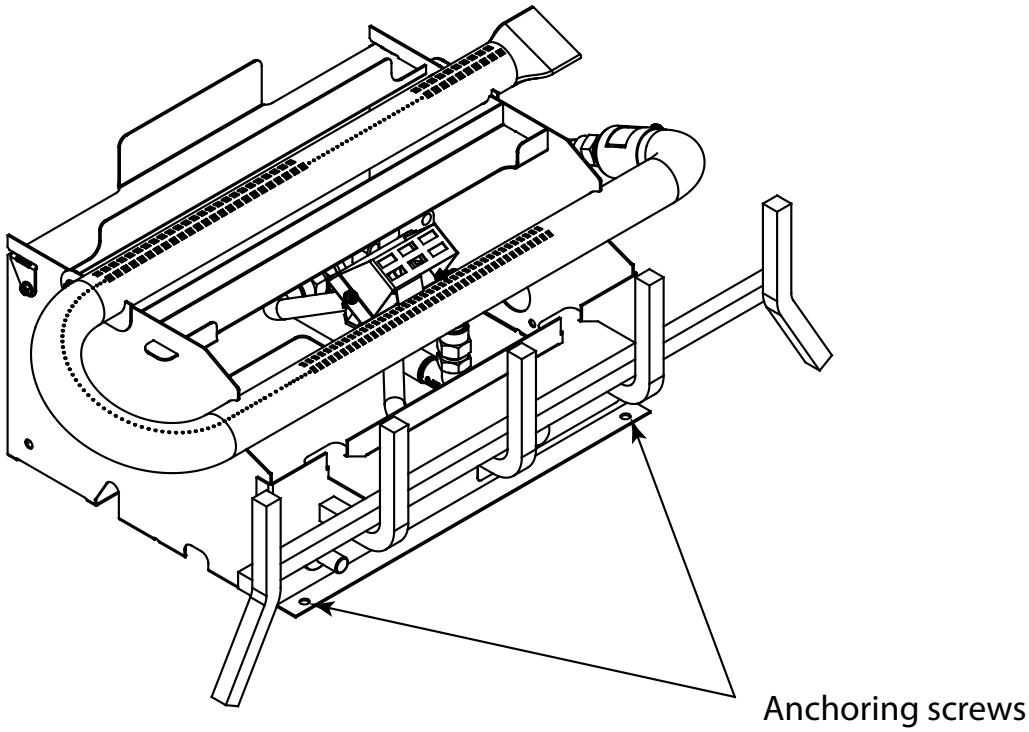

Figure 3.9 - Securing Heater to Floor of Fireplace/Firebox

4 Gas Information

WARNING

Risk of Fire! Risk of Explosion! Risk of Asphyxiation!

Follow all instructions and warnings for installing and servicing gas line.

- **Gas line installation and service must be performed by a qualified installer or licensed plumber in accordance with all applicable codes for the installation location (NFPA 54 / ANSI Z223.1, the current International Fuel Gas Code, or CAN/CSA B149 in Canada) (In the Commonwealth of Massachusetts installation must be performed by a licensed plumber or gas fitter).**
- **Check all fittings and connections by means of a listed combustible gas detector, a noncorrosive leak detection fluid, or other approved leak detection method. DO NOT use open flame.**

WARNING

Risk of Fire! Risk of Explosion!

Pressure exceeding 1/2 PSIG (14 in. w.c. / 3.5 kPa) will damage gas valve control.

- **Disconnect appliance and its manual shutoff valve BEFORE line pressure testing.**
- **Cap outlet on piping system at appliance connection BEFORE line pressure testing.**
- **Connect appliance AFTER confirming piping system pressure is equal or less than 1/2 PSIG (14 in. w.c. / 3.5 kPa).**

A. Fuel Type

- Make sure the appliance is compatible with available gas types.
- Field conversion is **NOT** permitted.

B. Gas Pressure

- Install pressure regulator upstream of gas valve if line inlet pressure exceeds 1/2 PSIG.
- Recommended inlet pressure for optimal appliance performance: 7.0 in. w.c. (NG) 12.0 in. w.c. (Propane).
- Verify inlet pressure is within specified range, including when other household gas appliances are operating.
- Pressure requirements when in operation are:

	Natural Gas	Propane (LP)
Inlet Minimum	5.0” W.C.	11.0” W.C.
Inlet Maximum	10.0” W.C.	13.0” W.C.
Manifold Pressure	3.5” W.C.	10.0” W.C.
Pilot Regulator	3.5” W.C.	-

Table 4.1 Gas Pressures

Note: A listed (and Commonwealth of Massachusetts approved) 1/2 in. (13 mm) T-handle manual shut-off valve and flexible gas connector are connected to the 1/2 in. (13 mm) control valve inlet.

- **If substituting for these components, please consult local codes for compliance.**

C. Gas Connection and Gas Line Purging

WARNING

Risk of Fire! Risk of Explosion!

Gas buildup during line connection and purging could ignite.

- **Support gas control when attaching pipe to prevent bending gas line.**
- **Gas line installation and purging of the gas fuel line MUST be preformed by a qualified service technician or a licensed plumber in accordance with the applicable gas code for the installation location (NFPA 54 / ANSI Z223.1, the current International Fuel Gas Code, or CAN/CSA B149 in Canada).**
- **Use a listed combustible gas detector, a noncorrosive leak detection fluid, or other approved leak detection method to check all fittings and connections for gas leaks before lighting the appliance.**
- **Ensure Ventilation**
- **Eliminate ignition sources, such as sparks or open flames**

- The gas inlet connection is on the right rear side of the appliance. To connect from the opposite side, route the appliance gas connector around the back of the appliance.
- Pipe incoming gas line into firebox. See Figure 4.1.
- The gap between supply piping and gas access hole may be caulked with caulk with a minimum of 300ºF continuous exposure rating or stuffed with non-combustible, unfaced insulation to help prevent cold air infiltration.
- Ensure that gas line does not come in contact with outer wrap of the firebox/fireplace. Follow local codes.
- A small amount of air will be in the gas supply line and must be purged. Light the appliance to allow air to purge through the pilot assembly.

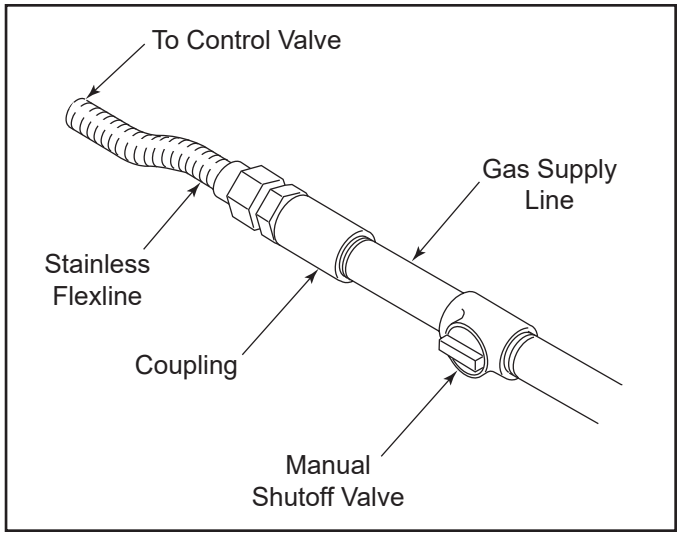

Figure 4.1 Gas Connection

D. Verify Gas Pressure

Manual Valve

The pressure regulator is preset and locked to discourage tampering. If the pressure is not as specified, replace the regulator with the correct part from the parts list in this manual.

Remove 1/8” NPT plug, located on side of regulator body. Install fitting and tubing to pressure gauge. After taking pressure reading, reinstall test plug. Check for gas leaks. See Figure 4.2.

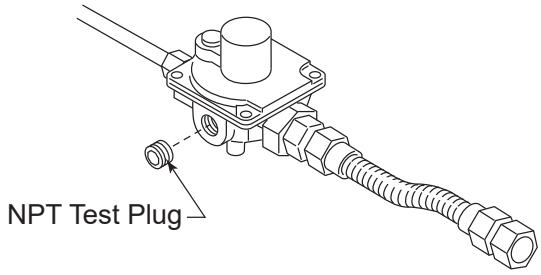

Figure 4.2 Pressure Test Point Location Manual Valve

5 Gas Log Sets

A. Grate and Log Installation

⚠ WARNING

The positioning of the logs is critical to the safe and clean operation of this heater. Sooting and other problems may result if the logs are not properly and firmly positioned in the appliance. Never add additional logs or embellishments such as pine cones, vermiculite or rock wool to the heater. Only use the logs and rock wool supplied with the unit.

Failure to position the parts in accordance with diagrams on the following pages or failure to use only parts specifically approved for this heater may result in property damage or personal injury.

BEFORE YOU BEGIN

This unit requires the use of concrete logs. Do not handle these logs with your bare hands. **Always wear gloves to prevent skin irritation from ceramic fibers.** After handling the logs, wash your hands gently with soap and water to remove any traces of fibers.

B. LOG PLACEMENT MEZMER-18/24/30 LOG SETS

1. Place Rear Log (#1) on rear support. Figure 6.1
2. Place Front Log (#3) between burner and grate. Use tab on right side as guide on grate. Figure 6.2
3. Place Middle Log (#2) on middle support. Log will sit on right side of support. Rest bottom left corner on front log in notch. Figure 6.3
4. Place Top Right Log (#4) by resting log on front and middle log. Figure 6.4
5. Place last two logs (#5, #6) by resting logs on middle and back logs. Figures 6.5a and 6.5b

NOTE: Logs #1, #2 and #3 have ridges on the bottom which secure the logs to burner frame. After installing each log, check to be sure it is stable.

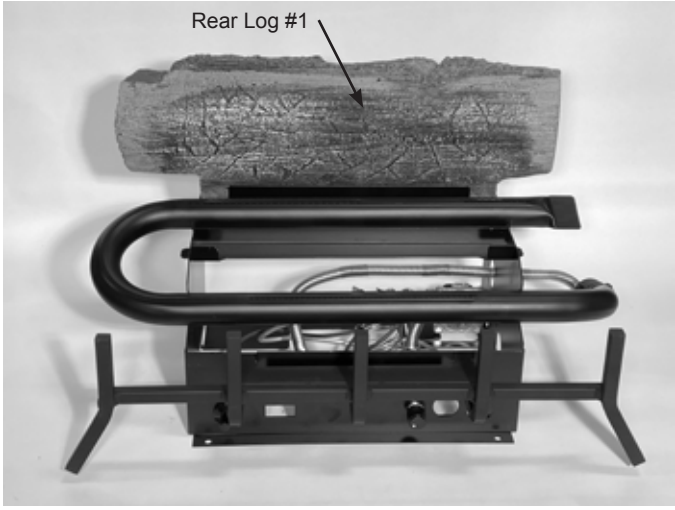

Figure 6.1 - Place Rear Log

Figure 6.2 - Place Front Log

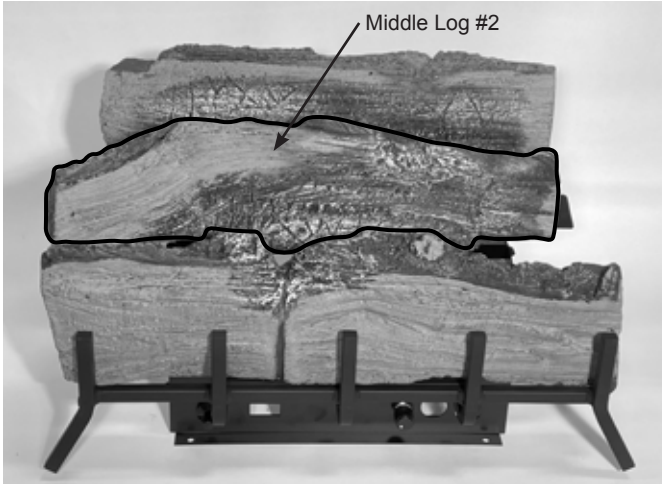

Figure 6.3 - Place Middle Log

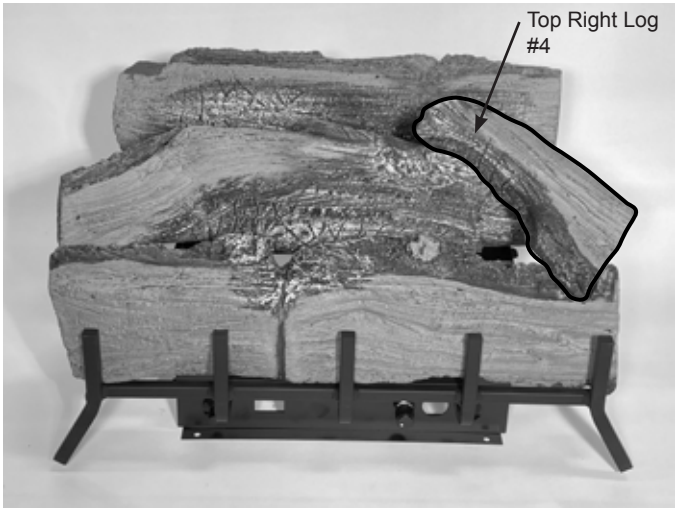

Figure 6.4 - Place Top Right Log

Figure 6.5a - Mezmer Bark Log Set
Place Top Left and Middle Logs

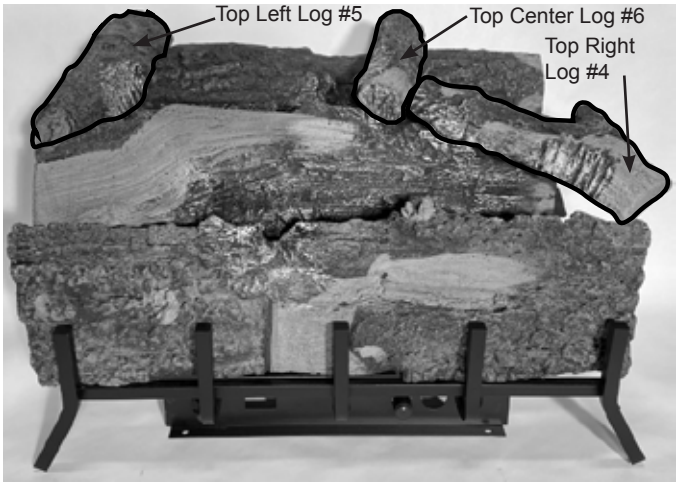

Figure 6.5b- Mezmer Bark Log Set
Place Top Left and Center Logs

C. LOG PLACEMENT MOUNTAIN OAK-18 LOGS

1. Place Rear Log (#1) on rear support. Figure 6.6
2. Place Middle Log (#2) on middle support. Figure 6.7
3. Place Front Log (#3) in between burner and grate. Figure 6.8
4. Rest Top Log (#4) in front and middle log cutouts. Figure 6.9

NOTE: Logs #1, #2 and #3 have ridges on the bottom which secure the logs to burner frame. After installing each log, check to be sure it is stable.

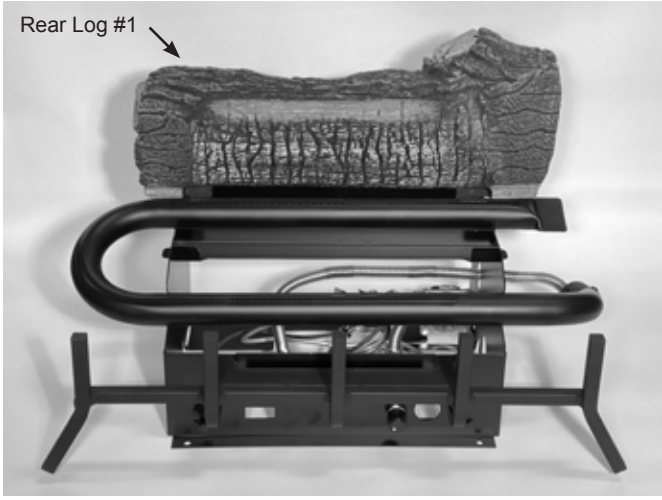

Figure 6.6 - Place Rear Log

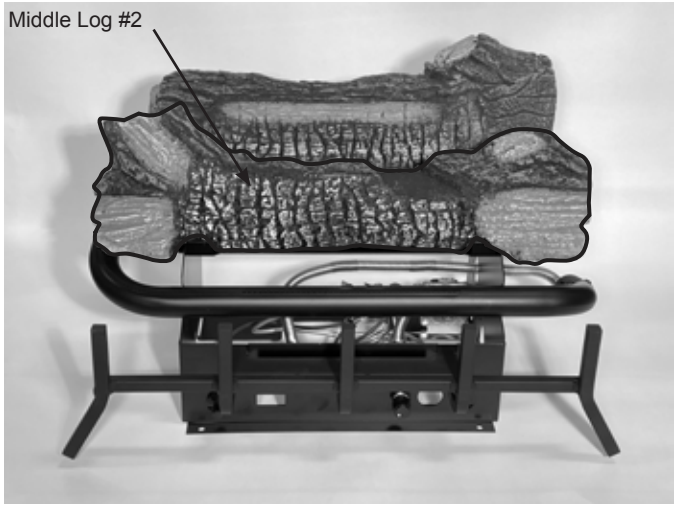

Figure 6.7 - Place Middle Log

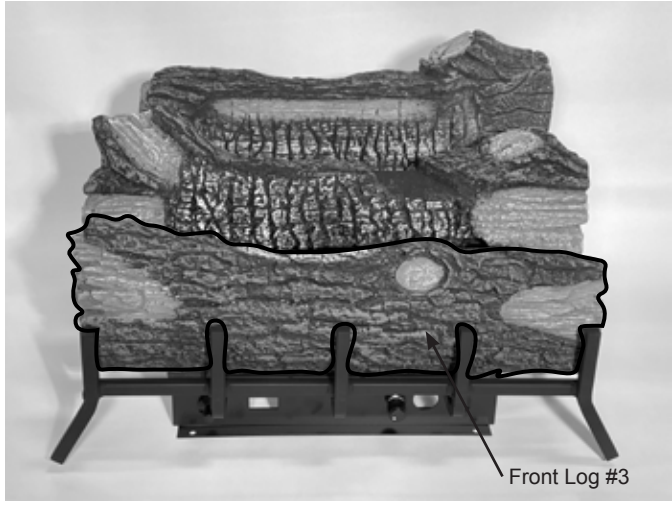

Figure 6.8 - Place Front Log

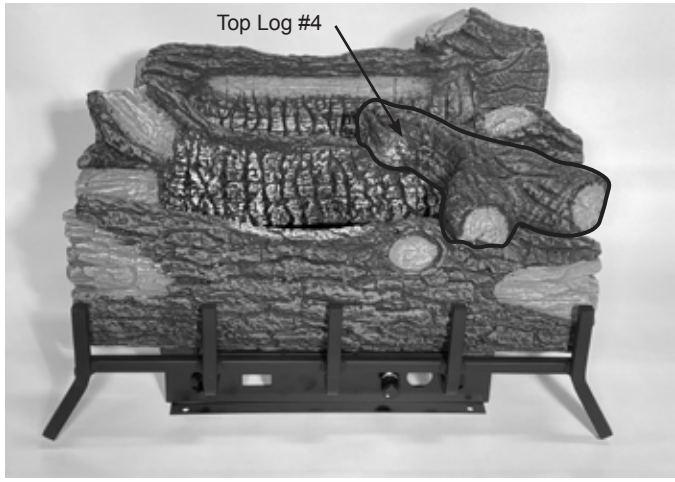

Figure 6.9 - Place Top Log

D. LOG PLACEMENT MOUNTAIN OAK-24/30 LOG SETS

1. Place Rear Log (#1) on rear support. Figure 6.10
2. Place Middle Log (#2) on middle support. Figure 6.11
3. Place Front Log (#3) in between burner and grate. Figure 6.12
4. Place Top Right Log (#4) in bottom log cutouts. Figure 6.13
5. Rest Top Left Log (#5) in front and middle log cutouts. Figure 6.13

NOTE: Logs #1, #2 and #3 have ridges on the bottom which secure the logs to burner frame. After installing each log, check to be sure it is stable.

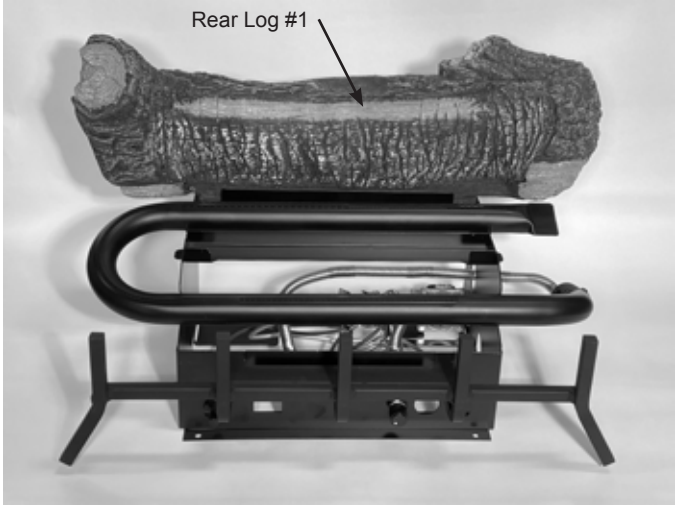

Figure 6.10 - Place Rear Log

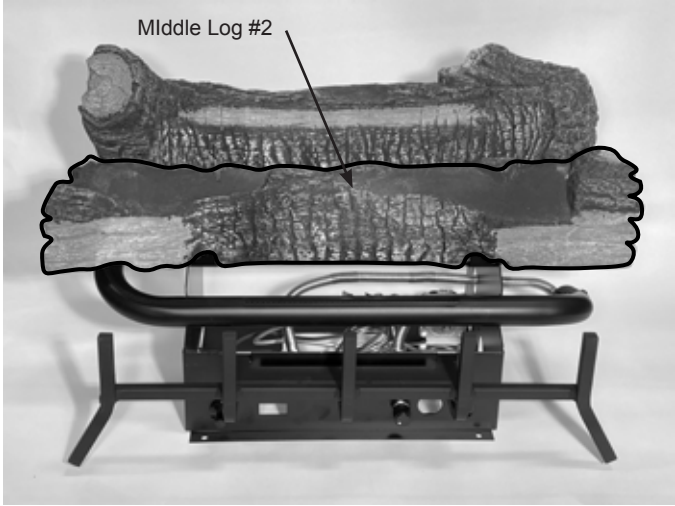

Figure 6.11 - Place Middle Log

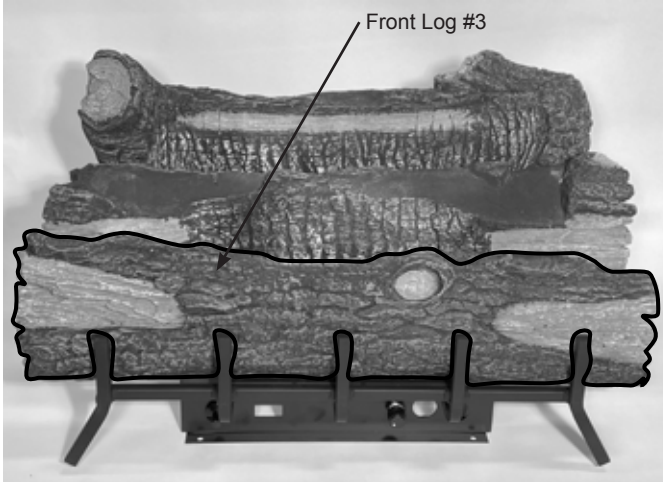

Figure 6.12 - Place Front Log

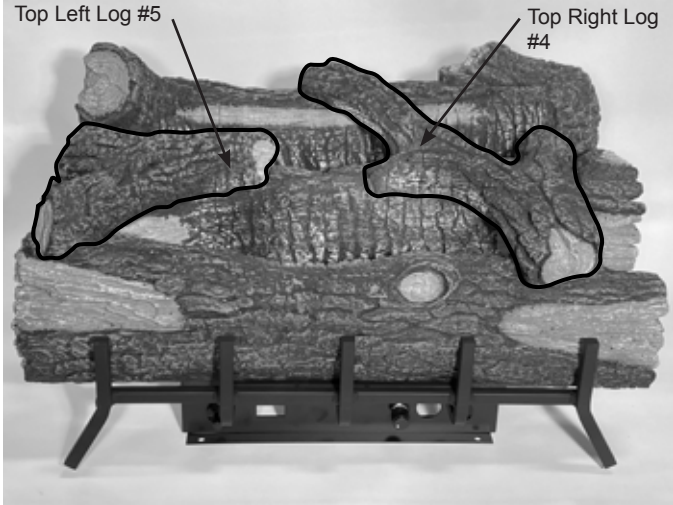

Figure 6.13 - Place Top Right and Left Logs

PLACE THE DECORATIVE ROCK

The volcanic rocks are shipped with your log set. The volcanic rocks may be placed around the unit on the floor of the firebox. Be sure to avoid any areas on the burner itself.

CAUTION

DO NOT sprinkle volcanic rocks on the logs, around the pilot, nor near the burners. This may cause sooting. Place volcanic rocks only on the floor of the fireplace.
During initial operation of the new heater, new burning logs and/or rock wool will give off a paper burning smell and orange flames will be present. Simply open the windows for a few hours to vent the odor.

E. Flame Appearance

Flames from the pilot and burner should be visually checked as soon as the heater is installed. In addition, periodically check the flames visually during operation.

Check the Pilot Flame (refer to lighting instructions)

The pilot flame must always be present when the heater is in operation. It should just touch the top of the thermocouple tip. Refer to Figure 6.14 for correct pilot flame.

If the pilot flame does not touch the thermocouple, then the main burner cannot function reliably. Figure 6.15 for incorrect shape of pilot flame.

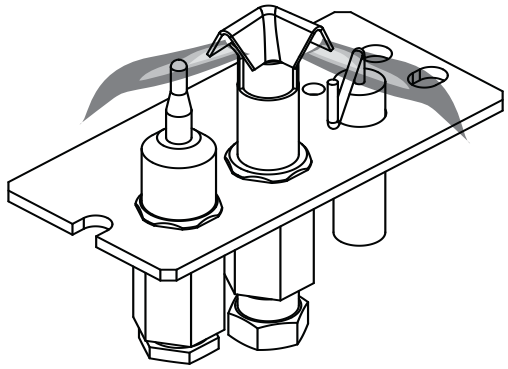

Figure 6.14 - Correct Appearance of Pilot Flame

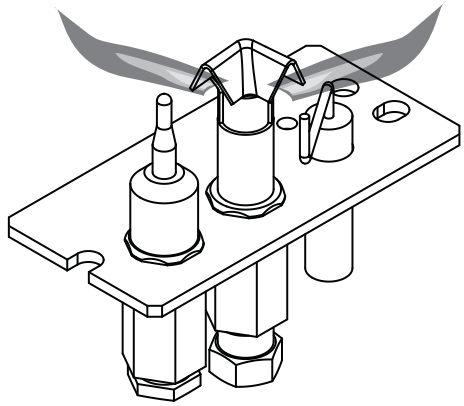

Figure 6.15 - Incorrect Appearance of Pilot Flame

CAUTION: After a 15 minute pre-heat period, observe all yellow flames to ensure there is no impingement with any log. If any yellow flame is contacting any log, turn off log set and allow to cool. Remove all logs and carefully reinstall following log placement instructions precisely. Relight burner and check again for impingement of any flame on log. If flame impingement cannot be eliminated, contact your installer or dealer for assistance. Flame impingement on logs may create soot and possible property damage.

F. Operating Instructions

Avoid any drafts that alter burner flame patterns. Do not allow fans to blow directly into the fireplace. Do not place a blower inside the burn area of the firebox. Ceiling fans may create drafts that alter flame patterns. Sooting and improper burning will result.

During manufacturing, fabricating and shipping, various components of this appliance are treated with certain oils, films or bonding agents. These chemicals are not harmful, but may produce annoying smoke and smells as they are burned off during the initial operation of the appliance, possibly causing headaches or eye or lung irritation. *This is a normal and temporary occurrence.*

The initial break-in operation should last four hours with the burner at the highest setting. Provide maximum ventilation by opening windows or doors to allow odors to dissipate. Any odors remaining after this initial break-in will be slight and will disappear with continued use.

This appliance must not be used with glass doors in the closed position. This can lead to pilot outages and severe sooting outside the fireplace.

Owner's Manual

Care and Operation

INSTALLER: Leave this manual with the appliance
OWNER: Retain this manual for future reference.

***NOTICE: DO NOT** discard this manual!*

outdoor lifestyles
by hearth & home technologies®

Lumonessen Series

Models:

LUM-OD-NM

LUM-OD-PM

GAS-FIRED
C UL US
LISTED
MH61458

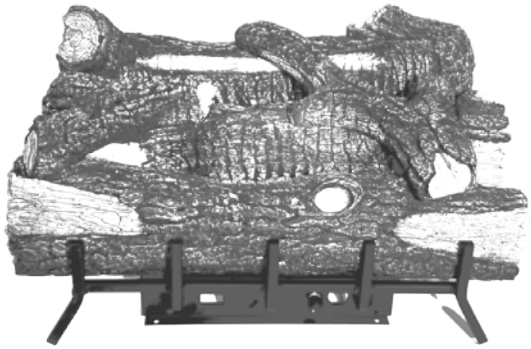

Outdoor Burner/Log Set

DANGER

FIRE OR EXPLOSION HAZARD

If you smell gas:

- Shut off gas to the appliance.
- Extinguish any open flame.
- If odor continues, leave the area immediately.
- After leaving the area, call your gas supplier or fire department.
- Failure to follow these instructions could result in fire or explosion, which could cause property damage, personal injury, or death.

WARNING

Do not store or use gasoline or other flammable vapors and liquids in the vicinity of this or any other appliance

An LP-cylinder not connected for use shall not be stored in the vicinity of this or any other appliance.

WARNING: For outdoor use only.
Installation and service must be performed by a qualified installer, service agency, or the gas supplier.

DANGER

CARBON MONOXIDE HAZARD

This appliance can produce carbon monoxide which has no odor.

Using it in an enclosed space can kill you.

Never use this appliance in an enclosed space such as a camper, tent, car or home.

WARNING: If the information in this manual is not followed exactly, a fire or explosion may result causing property damage, personal injury, or loss of life.

Read this manual before operating this appliance.
Please retain this Owner's Manual for future reference.
Read the Installation Manual before making any installation or finishing changes.

A. Congratulations

Congratulations and thank you for selecting a Outdoor Lifestyles vent free gas log set, an elegant and clean alternative to wood burning fireplaces. The gas log set you have selected is designed to provide the utmost in safety, efficiency, and style.

As the owner of a new vent free log set, you'll want to read and carefully follow all of the instructions contained in this owner's manual. Pay special attention to all cautions and warnings.

This owner's manual should be retained for future reference. We suggest that you keep it with your other important documents and product manuals.

The information contained in this owner's manual, unless noted otherwise, applies to all models and gas control systems noted on the cover page.

Your new Outdoor Lifestyles gas log set will give you years of durable use and trouble-free enjoyment. Welcome to the Outdoor Lifestyles family. We are glad you joined us!

Local Dealer Information

Dealer: *Fill in your name, address, phone and email information here and appliance information below.*

Dealer Name: _____

Address: _____

_____

Phone: _____

Email: _____

Appliance Information:

Brand: _____ Model Name: _____

Serial Number: _____ Date Installed: _____

Listing Label Information/Location

The model information regarding your specific gas log set can be found on the rating plate usually located in the control area of the gas log set.

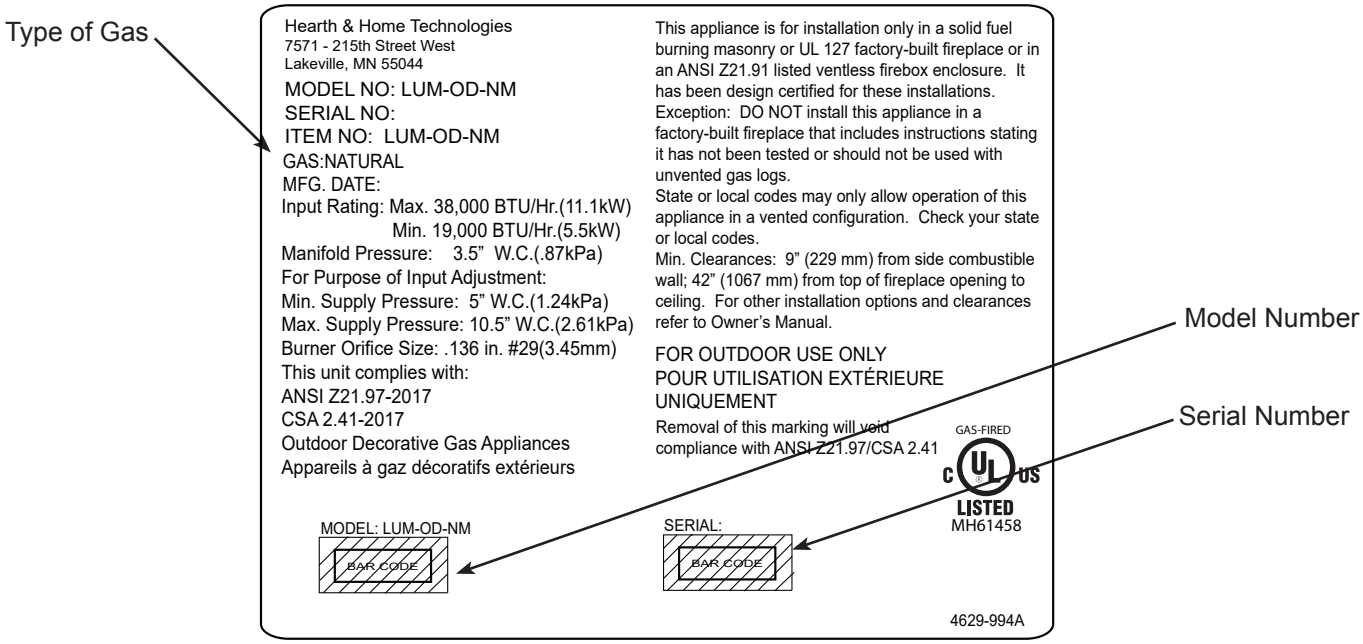

B. Limited Lifetime Warranty

Outdoor Lifestyles by Hearth & Home Technologies™
Limited Lifetime Warranty

Hearth & Home Technologies ("HHT") extends the following warranty for all Outdoor Lifestyles by HHT™ brand products ("Products") that are purchased from an HHT authorized dealer.

WARRANTY COVERAGE:

HHT warrants to the original owner of the Product at the site of installation, and to any transferee taking ownership of the Product at the site of installation within one year following the date of original purchase, that the Product will be free from defects in materials and workmanship at the time of manufacture. After installation, if covered components manufactured by HHT are found to be defective in materials or workmanship during the applicable warranty period, HHT will, at its option, repair or replace the covered components. This warranty is subject to conditions, exclusions and limitations as described below.

WARRANTY PERIOD:

The warranty period begins on the earlier of: (i) the date of invoice for the Product;
(ii) in the case of new home construction, the date of first occupancy of the residence or six months after the date of sale of the Product by an HHT authorized dealer, whichever occurs first; or (iii) the date 24 months following the date of Product shipment from HHT, regardless of the invoice or occupancy date.

WARRANTY CONDITIONS:

- The Limited Lifetime Warranty covers Products that are purchased through a HHT authorized dealer or distributor. A list of HHT authorized dealers is available on the HHT branded websites.
- This warranty is only valid while the Product remains at the site of original installation.
- Contact your installing dealer for warranty service. If the installing dealer is unable to provide necessary parts, contact the nearest HHT authorized dealer. Additional service fees may apply if you are seeking warranty service from a dealer other than the dealer from whom you originally purchased the Product.
- Check with your dealer in advance for any costs to you when arranging a warranty call. Travel and shipping charges for parts are not covered by this warranty.
- The Product body, metal firebox and heat exchanger carry the Limited Lifetime Warranty from the date of installation.
- The following components do not carry the Limited Lifetime Warranty but are warranted as follows:
  - One Year from Date of Installation:
    - Gas and Electrical Components or Gaskets
    - Nickel Plated Materials
      - Excludes tarnishing
    - Glass Breakage, Logs/Refractory/Glass Panels due to thermal breakage
      - Surface, hairline cracks, scratches and slight color changes are not covered
    - Venting, optional accessories, optional glass doors
    - Labor Associated with Warranty Service Work

WARRANTY EXCLUSIONS:

This warranty does not cover the following:

- Changes in surface finishes as a result of normal use. As a heating appliance, some changes in color of interior and exterior surface finishes may occur; this is not a flaw and not covered under warranty.
- Damage to printed, plated, or enameled surfaces caused by fingerprints, accidents, misuse, scratches, melted items, or other external sources and residues left on surfaces from the use of abrasive cleaners or polishes.
- Repair or replacement of parts that are subject to normal wear and tear during the warranty period. These parts include: paint, firebricks, grates, flame guides and the discoloration of glass.
- Minor expansion, contraction, or movement of certain parts causing noise. These conditions are normal and complaints related to this noise are not covered by this warranty.

B. Limited Lifetime Warranty *(continued)*

- Damages resulting from: (1) failure to install, operate, or maintain the Product in accordance with the installation instructions, operating instructions, and listing agent identification label furnished with the Product; (2) failure to install the Product in accordance with local building codes; (3) shipping or improper handling; (4) improper operation, abuse, misuse, continued operation with damaged, corroded or failed components, accident, or incorrectly performed repairs; (5) inadequate ventilation, negative pressure or environmental conditions, including, without limitation: hail, snow, ice, fallen branches, flooding, water damage and fading of color; (6) use of fuels other than those specified in the operating instructions; (7) installation or use of components not supplied with the Product or any other components not expressly authorized and approved by HHT; (8) modification of the Product not expressly authorized and approved by HHT in writing; and/or (9) interruptions or fluctuations of electrical power supply to the Product.
- Non-HHT venting components, hearth components or other accessories used in conjunction with the Product.
- Any part of a pre-existing fireplace system in which an insert or a decorative gas appliance is installed.
- The Product's capability to heat the desired space. Information is provided to assist the consumer and the dealer in selecting the proper appliance for the application. Consideration must be given to the Product's location and configuration and environmental conditions.

This warranty is void if:

- The Product has been over-fired or operated in atmospheres contaminated by chlorine, fluorine, or other damaging chemicals. Over-firing can be identified by, but not limited to, warped plates or tubes, rust colored cast iron, bubbling, cracking and discoloration of steel or enamel finishes and cracking or spalling of refractory or cementitious materials.
- The Product is subjected to prolonged periods of dampness, condensation, ice or snow.
- There is any damage to the Product or other components due to water or weather damage which is the result of, but not limited to, improper chimney or venting installation.

LIMITATIONS OF LIABILITY:

Repair or replacement in accordance with the provisions of this warranty will be the owner's exclusive remedy for and will constitute HHT's sole obligation under this warranty, under any other warranty (express or implied), or in contract, tort or otherwise; provided, however, that if HHT is unable to provide repair or replacement in an expedient and cost effective manner, HHT may discharge all such obligations by refunding the purchase price of the Product. No employee, agent, dealer, or other person is authorized to give any warranty on behalf of HHT. TO THE EXTENT ALLOWED BY LAW, HHT MAKES NO OTHER WARRANTY, EXPRESS OR IMPLIED, INCLUDING ANY WARRANTY OF MERCHANTABILITY OR FITNESS FOR A PARTICULAR PURPOSE. HHT WILL NOT BE LIABLE FOR ANY CONSEQUENTIAL OR INCIDENTAL DAMAGES ARISING OUT OF DEFECTS IN OR USE OF THE PRODUCTS. Some states do not allow exclusions or limitation of incidental or consequential damages, so these limitations may not apply to you. This warranty gives you specific rights; you also may have other rights, which vary from state to state. The duration of any implied warranty is limited to the duration of the warranty period specified herein.

7 Product Specific Information

A. Appliance Certification

***MODEL:* LUM-OD-NM, LUM-OD-PM**
***LABORATORY:* Underwriters Laboratory (UL)**
***TYPE:* Outdoor Decorative Gas Appliance**
***STANDARD:* ANSI Z21.97-2017, CSA 2.41-2017**

This product is listed to ANSI standards for “Outdoor Decorative Gas Appliances” and “Gas Fired Appliances for Use at High Altitude.”

NOTICE: *This installation must conform with local codes. In the absence of local codes you must comply with the National Fuel Gas Code, ANSI Z223.1—latest edition in the U.S.A.*

Installation and service of this appliance should be performed by qualified personnel. Hearth & Home Technologies recommends HHT Factory Trained or NFI certified professionals.

B. BTU Specifications and Weight

Models		Maximum Input BTU/h	Minimum Input BTU/h	Orifice	Weight Pounds
LUM-OD-NM	*(0-2000 FT)*	38,000	19,000	.136 in (3.45mm) #29	7
LUM-OD-PM	*(0-2000 FT)*	38,000	31,000	.0.78 in (1.98mm) #47	7

8 Important Safety and Operating Information

A. Appliance Safety

WARNING! DO NOT operate gas log set before reading and understanding operating instructions. *Failure to operate gas log set according to operating instructions could cause fire or injury.*

WARNING! Choking Hazard! *Keep media out of reach of children.*

- Alert children and adults to hazards of high temperatures.

High temperatures may ignite clothing or other flammable materials.

- Clothing, furniture, draperies, and other flammable materials must not be placed on or near the appliance.

Young children should be carefully supervised when they are in the same room as the appliance. Toddlers, young children and others may be susceptible to accidental contact burns.

- A physical barrier is recommended if there are at risk individuals in the house.
- To restrict access to a fireplace, install an adjustable safety gate to keep toddlers, young children, pets and other at risk individuals out of the room and away from hot surfaces.
- Never leave children alone near a hot fireplace, whether operating or cooling down.
- Teach children to NEVER touch the fireplace.
- Consider not using the fireplace when children will be present.

Contact your dealer for more information, or visit: www.hpba.org/safety-information.

To prevent unintended operation when not using your fireplace for an extended period of time (summer months, vacations, trips, etc):

- Turn off pilot or gas valve.

Clear Space

WARNING! DO NOT *place combustible objects in front of the fireplace. High temperatures may start a fire. See Figure 9.1.*

Avoid placing candles, electronics and other heat-sensitive objects on mantel or hearth. Heat may damage these objects.

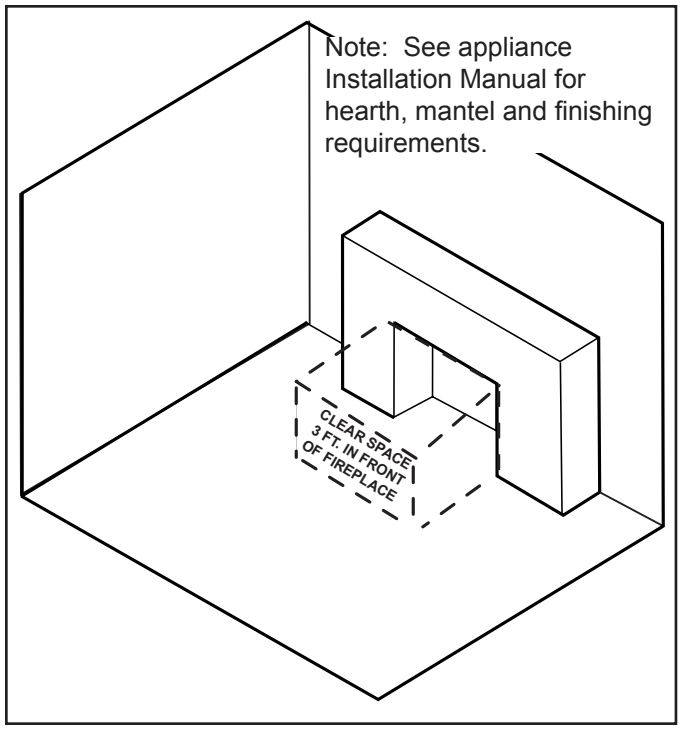

Figure 9.1 Clear Space

Over Firing

The appliance is considered to be over firing if the flames are contacting the top of the firebox. Call a qualified service technician to service the appliance.

Important Safety and Operating Information (continued)

OWNER

Please retain these instructions for future reference.

⚠ WARNING

- **Any change to this heater or its controls can be dangerous.**
- **Improper installation or use of the heater can cause serious injury or death from fire, burns, explosion or carbon monoxide poisoning.**
- **Do not allow fans to blow directly into the fireplace. Avoid any drafts that alter burner flame patterns.**
- **Do not use a blower insert, heat exchanger insert or other accessory, not approved for use with this heater where applicable.**

1. Due to high temperatures, the appliance should be located out of traffic and away from furniture and draperies.
2. Children and adults should be alerted to the hazard of high surface temperature and should stay away to avoid burns or clothing ignition.
3. Young children should be carefully supervised when they are in the same room with the appliance.
4. Do not place clothing or other flammable material on or near the appliance.
5. Any safety screen removed for servicing an appliance, must be replaced prior to operating the heater.
6. Installation and repair should be done by a qualified service person. To prevent malfunction and/or sooting, an unvented gas heater should be cleaned before use and at least annually by a professional service person. More frequent cleaning may be required due to excessive lint from carpeting, bedding materials, etc. It is imperative that control compartments, burners and circulating air passageways be kept clean.
7. WARNING: Any change to this heater or its controls can be dangerous.
8. Unvented gas room heaters are a supplemental zone heater. They are not intended to be the primary heating appliance.
9. **CARBON MONOXIDE POISONING:** Early signs of carbon monoxide poisoning are similar to the flu with headaches, dizziness and/or nausea. If you have these signs, obtain fresh air immediately. Have the heater serviced as it may not be operating properly.
10. The installation must conform with local codes or, in the absence of local codes, with the **National Fuel Gas Code, ANSI Z223.I/NFPA54.**
11. This unit complies with ANSI Z21.97-2017 CSA 2.41-2017 Outdoor Decorative Gas Appliances.
12. Do not install the heaters in a bathroom or bedroom.
13. Correct installation of the logs, proper location of the heater, and annual cleaning are necessary to avoid potential problems with sooting. Sooting, resulting from improper installation or operation, can settle on surfaces outside the fireplace. Refer to log placement instructions for proper installation.
14. Avoid any drafts that alter burner flame patterns. Do not allow fans to blow directly into fireplace. Do not place a blower inside burn area of firebox. Ceiling fans may create drafts that alter burner flame patterns. Sooting and improper burning will occur.
15. **Caution:** Candles, incense, oil lamps, etc. produce combustion by-products including soot. The Outdoor Appliance will not filter or clean soot produced by these types of products. In addition, the smoke and/or aromatics (scents) may be reburned in the vent-free appliance which can produce odors. It is recommended to minimize the use of candles, incense, etc. while the Outdoor Appliance is in operation.
16. Keep room area clear and free from combustible materials, gasoline and other flammable vapors and liquids.
17. During manufacturing, fabricating and shipping, various components of this appliance are treated with certain oils, films or bonding agents. These chemicals are not harmful but may produce annoying smoke and smells as they are burned off during the initial operation of the appliance; possibly causing headaches or eye or lung irritation. This is a normal and temporary occurrence.
18. Input ratings are shown in BTU per hour and are for elevations up to 2,000 feet. For elevations above 2,000 each 1,000 feet above sea level. Refer to the National Fuel Gas Code.
19. The appliance and its appliance main gas valve must be disconnected from the gas supply piping system during any pressure testing of that system at test pressures in excess of ½ psig (3.5 kPa).

20. The appliance must be isolated from gas supply piping system by closing its equipment shutoff valve during any pressure testing of the gas supply piping system at test pressures equal to or less than ½ psig (3.5 kPa).
21. Do not use this room heater if any part has been under water. Immediately call a qualified service technician to inspect the room heater and to replace any part of the control system and any gas control which has been under water.
22. Never burn solid fuels in a fireplace where a unvented room heater is installed.

BUILDING CODE INFORMATION

Adhere to all local codes or, in their absence, the latest edition of THE NATIONAL FUEL GAS CODE ANSI Z223.1 or NFPA54 which can be obtained from:

American National Standards Institute, Inc.
1430 Broadway
New York, NY 10018

or

National Fire Protection Association, Inc.
Batterymarch Park
Quincy, MA 02269

B. General Operating Parts

Figure 9.2 references the general operating parts of the appliance.

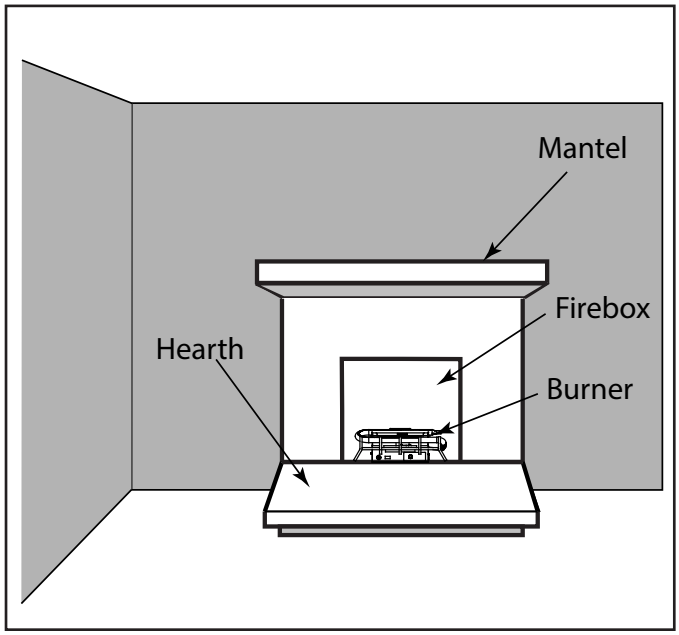

Figure 9.2 General Operating Parts

C. Fuel Specifications

WARNING! Risk of Fire or Explosion! *Appliance must be set up for compatible gas type!*

- This appliance is designed to operate on either natural gas or propane. Make sure the appliance is compatible with gas type selected for installation site.

WARNING! Risk of Fire! *Comply with all minimum clearances to combustibles as specified in the installation instructions.*

D. Before Lighting Appliance

Before operating this heater for the first time, **have a qualified service technician**:

- Verify all shipping materials have been removed from inside and/or underneath the gas log set
- Review proper placement of logs
- Ensure that there are no gas leaks

9 Lighting Instructions

A. Manual Valve

FOR YOUR SAFETY READ BEFORE LIGHTING

⚠ WARNING

If you do not follow these instruction exactly, a fire or explosion may result causing property damage, personal injury or loss of life.

A. This appliance is equipped with a piezo ignition device which lights the pilot. If piezo is not working properly see *Match Lighting Instructions.*

B. BEFORE OPERATING smell all around the appliance area for gas. Be sure to smell next to the floor because some gas is heavier than air and will settle on the floor.

WHAT TO DO IF YOU SMELL GAS:

- Do not attempt to light any appliance.
- Do not touch any electric switch; do not use any phone in your building.
- Immediately call your gas supplier from a neighbor's phone. Follow the gas supplier's instructions.
- If you cannot reach your gas supplier, call the fire department.

C. Use only your hand to push in, or turn the gas control knob. Never use tools. If the knob will not push in or turn by hand, don't try to repair it. Call a qualified service technician. Force or attempted repair may result in a fire or explosion.

D. Do not use this appliance if any part of it has been under water. Immediately call a qualified service technician to inspect the appliance and to replace any part of the control system and any gas control that has been under water.

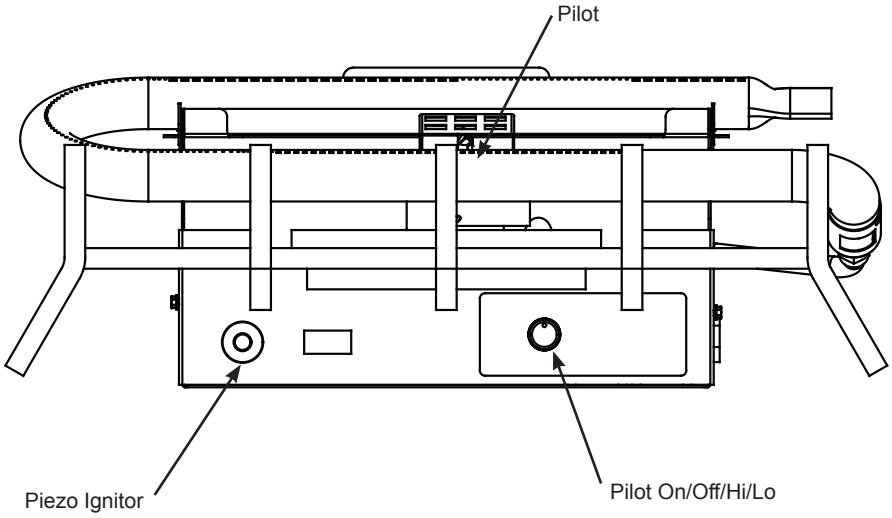

Figure 10.1 - Location of Piezo Ignitor and Control Knobs

MANUAL CONTROL LIGHTING INSTRUCTIONS

1. STOP! Read the safety information label.
2. Make sure the manual shutoff valve is fully open.
3. This gas log set is equipped with an ignition device (piezo) which automatically lights the pilot. If piezo ignitor does not light the pilot, refer to instructions for *Match Lighting Instructions.*
4. Turn gas control knob clockwise to the OFF position.
5. Wait (5) minutes to clear out any gas. Then smell for gas, including near the floor. If you smell gas, STOP! Follow the instructions under *What To Do If You Smell Gas.*
6. From OFF position, turn the gas control knob counterclockwise to IGN position. Push in control knob for 5 seconds. ***NOTE: If you are running the heater for the first time, it may be necessary to press in the control knob for 30 seconds or longer to allow air to bleed out of the gas piping.***
7. With the control knob pushed in, push in and release the piezo ignitor button to light the pilot.
8. Continue pushing the control knob in for a further 60 seconds to prevent the flame detector from shutting off the gas while the probe is warming up. Release the control knob.
9. Turn gas control knob counterclockwise to the ON position.
10. After the pilot has been lit for one minute, the burners can be turned on. Turn the ON/OFF knob to ON position.
11. If the gas logs will not operate, follow the instructions To Turn Off Gas To Heater below and call your service technician or gas supplier.

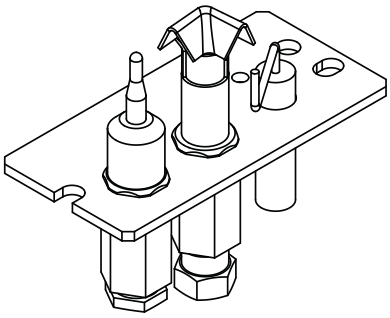

Pilot

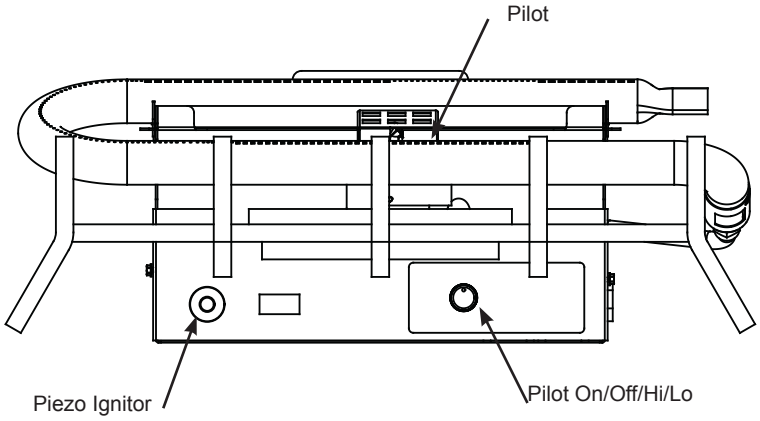

Controls

Figure 10.2 - Piezo Ignitor

TO TURN OFF GAS TO HEATER

1. Turn control knob clockwise to OFF position to completely shut off the heater.
2. If applicable: Turn off all electric power to the heater.
3. Call a qualified service technician for repair or replacement of the piezo ignitor.

B. Lighting Instructions

WARNING

FOR YOUR SAFETY READ BEFORE LIGHTING

WARNING: If you do not follow these instructions exactly, a fire or explosion may result causing property damage, personal injury or loss of life.

A. This appliance has a standing pilot. When lighting the pilot, follow these instructions exactly.

B. BEFORE LIGHTING smell all around the appliance area for gas. Be sure to smell next to the floor because some gas is heavier than air and will settle to the floor.
WHAT TO DO IF YOU SMELL GAS
- Do not try to light any appliance.
- Do not touch any electric switch; do not use any phone in your building.
- Immediately call your gas supplier from a neighbor's phone. Follow the gas supplier's instructions.
- If you cannot reach your gas supplier, call the fire department.

C. Do not use this appliance if any part has been under water. Immediately call a qualified service technician to inspect the appliance and to replace any part of the control system and any gas control which has been under water.

Due to high surface termperatures, keep children, clothing and furniture away.

Keep burner and control compartment clean. See installation and operating instructions accompanying the appliance.

FOR YOUR SAFETY: Do not store or use gasoline or other flammable vapors and liquids in the vicinity of this or any other appliance.

4629-914

Removal of this plate will void the compliance with ANSI Z21.97

OPERATING INSTRUCTIONS - VARIABLE MANUAL CONTROL

1. **STOP!** Read the safety information label.
2. Make sure the manual shutoff valve is fully open.
3. This heater is equipped with an ignition device (piezo) which automatically lights the pilot. Refer to instructions for match lighting.
4. Push in gas control knob slightly and turn clockwise to **"OFF"**.
5. Wait five (5) minutes to clear out any gas. Then smell for gas, including near the floor. If you smell gas, **STOP!** Follow **"B"** in the safety information label. If you don't smell gas, go to next step.
6. From **"OFF"** position, push in gas control knob slightly turn counterclockwise to **"IGN"** position. Push in contol knob for five (5) seconds.
7. With control knob pushed in, push and release the piezo ignitor button to light the pilot.
8. Continue pushing the control knob in for another 10 seconds to prevent the flame detector from shutting off the gas while probe is warming up. Release the control knob.
9. Push in the gas control knob slightly and turn counterclockwise to **"HIGH"**. Once the burner has been lit, turn the control knob counterclockwise to desired position between "**HI"** and **"LOW"**.
10. If the heater will not operate, follow the instructions "TO Turn Off Gas To Appliance" and call your service technician or gas supplier.
11. Wait 30 seconds before readjusting the heater when the control knob has been turned down to a lower setting.

PIEZO IGNITOR

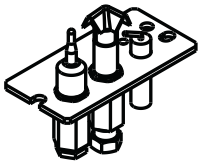

PILOT

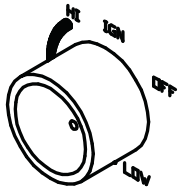

CONTROL KNOB

1. Push in gas control knob slightly and turn clockwise to **"OFF"**. Do not force.
2. If applicable: Turn off all electric power to appliance.

4629-914

C. Initial Use

Initial Break-in Procedure

- The burner should run three to four hours continuously on high.
- Turn the burner off and allow it to completely cool.

This cures the materials used to manufacture the burner.

NOTICE! Allow air circulation during heater break-in.

- *Some people may be sensitive to smoke and odors.*
- *Smoke detectors may activate.*

10 Maintenance and Service

Any safety screen removed for servicing must be replaced prior to operating the unvented room heater.

When properly maintained, your fireplace will give you many years of trouble-free service. **Contact your dealer** to answer questions regarding proper operation, troubleshooting and service for your appliance. Visit www.hearthnhome.com to locate a dealer. We recommend annual service by a qualified service technician.

A. Maintenance: Frequency and Tasks

The matrix below is an overview of maintenance tasks to be performed on the appliance. Section B gives details and instructions needed to assist the appropriate person in performing the tasks.

Task	Frequency	To be completed by
Pilot Inspection & Cleaning	Annually	Qualified Service Technician
Log Inspection	Annually	
Firebox Inspection	Annually	
Burner Ignition & Operation	Annually	

B. Maintenance Tasks: Qualified Service Technician

The following tasks must be performed by a qualified service technician.

Pilot

Frequency: Annually

By: Qualified Service Technician

Tools needed: Small soft brush, pipe cleaner

- Inspect and remove dust, spider webs and lint
- Gently run pipe cleaner through air intake port

Firebox

Frequency: Annually

By: Qualified Service Technician

Tools needed: Protective gloves, sandpaper, steel wool, cloths, mineral spirits, primer and touch-up paint.

- Inspect for paint condition, warped surfaces, corrosion or perforation. Sand and repaint as necessary.
- Replace fireplace if firebox has been perforated.

C. Burner Ignition and Operation

Frequency: Annually

By: Qualified Service Technician

Tools needed: Protective gloves, vacuum cleaner, whisk broom, flashlight, voltmeter, indexed drill bit set, and a manometer.

- Verify burner is properly secured and aligned with pilot or igniter.
- Clean off burner top, inspect for plugged ports, corrosion or deterioration. Replace burner if necessary.
- Inspect for lifting or other flame problems.
- Inspect orifice for soot, dirt and corrosion. Verify orifice size is correct. See Service Parts List for proper orifice sizing.
- Verify manifold and inlet pressures. Adjust regulator as required.
- Inspect pilot flame pattern and strength. See Figure 11.1 and 11.2 for proper pilot flame pattern. Clean or replace orifice spud as necessary.

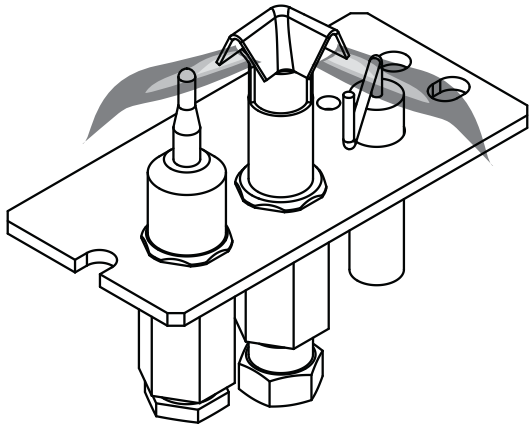

Figure 11.1 Correct Pilot Flame Appearance

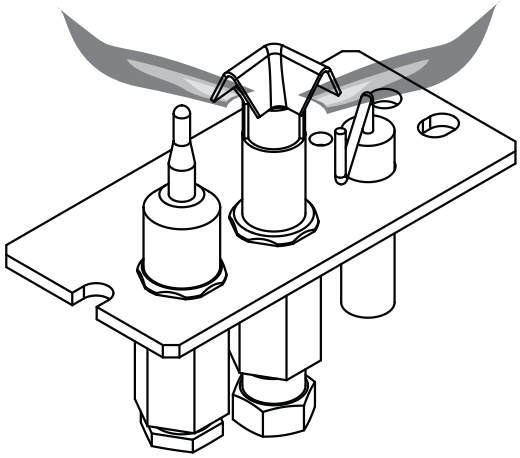

Figure 11.2 Incorrect Pilot Flame Appearance

D. Cleaning and Servicing

Annual inspection and cleaning by your dealer or qualified service technician is recommended to prevent malfunction and/or sooting.

⚠ WARNING

Turn off heater and allow to cool before cleaning.

Remove logs, handling carefully by holding gently at each end. Gloves are recommended to prevent skin irritation from logs. If skin becomes irritated, wash gently with soap and water. Refer to manual for correct log placement.

PERIODIC CLEANING - Refer to parts diagram for location of items discussed below.

- Do not use cleaning fluid to clean logs or any part of heater.
- Brush logs with soft bristle brush or vacuum with brush attachment.
- Vacuum loose particles and dust from the front and rear burner, control and piezo covers and grate weldment.
- Inspect and clean burner air intake holes. Remove lint or particles with vacuum, brush, or pipe cleaners. **Failure to keep air intake holes clean will result in sooting and poor combustion.**
- External case should be dusted and wiped with a wet soapy cloth.

ANNUAL CLEANING/INSPECTION - Refer to parts diagram for location of items discussed below.

- Inspect and clean burner air intake holes. Remove lint or particles with vacuum, brush or pipe cleaners. **Failure to keep air intake holes clean will result in sooting and poor combustion.**
- Inspect and clean all burner ports.
- Inspect ODS pilot for operation and accumulation of lint at air intake holes.
- Verify flame pattern and log placement for proper operation.
- Verify smooth and responsive ignition of main burner and rear burner.

11 Troubleshooting

⚠ WARNING

Turn appliance OFF and allow to cool before servicing. Only a qualified service person should service and repair the heater.

With proper installation, operation, and maintenance your gas appliance will provide years of trouble-free service. If you do experience a problem, this troubleshooting guide will assist a qualified service technician in the diagnosis of a problem and the corrective action to be taken. This troubleshooting guide can only be used by a qualified service technician. Contact your dealer to arrange a service call by a qualified service technician.

A. MANUAL VALVE CONTROL SYSTEM

NOTE: All troubleshooting items are listed in order of operation.

PROBLEM	POSSIBLE CAUSE	SOLUTION
When Piezo button is pressed, there is no spark at pilot.	Ignitor electrode positioned wrong.	Replace ignitor.
	Ignitor electrode is broken.	Replace ignitor.
	Ignitor electrode not connected to ignitor cable.	Reconnect ignitor cable.
	Ignitor cable pinched or wet. Keep ignitor cable dry.	Free ignitor cable if pinched by any metal or tubing.
	Broken ignitor cable.	Replace ignitor cable.
	Bad piezo ignitor.	Replace piezo ignitor.
Appliance produces unwanted odors.	Appliance burning vapors from paint, hair spray, glues, etc.	Ventilate room. Stop using odor causing products while heater is running.
	Gas leak.	Locate and correct all leaks.
	Initial burn off.	Ventilate room and turn unit on high until odor is gone. Odor should be gone after six hours of continuous use.
	Low line pressure.	Contact local gas company.
	Pilot is partially clogged.	Clean pilot.
	Defective thermocouple.	Replace thermocouple.
Gas odor even when control knob is in OFF position.	Gas leak.	Locate and correct all leaks.
	Control valve defective.	Replace control valve.
When ignitor button is pressed, there is spark at pilot, but no ignition.	Gas supply turned off or manual shutoff valve closed.	Turn on gas supply or open manual shutoff valve.
	Control knob not in PILOT position.	Turn control knot to PILOT position.
	Control knob not pressed in while in PILOT position.	Press in control knob while in PILOT position.
	Air in gas lines when installed.	Continue holding down control knob. Repeat igniting operation until air is removed.
	Pilot is clogged.	Replace pilot assembly or get it serviced.
	Gas regulator setting is not correct.	Check incoming pressure. Replace gas regulator.

12 Service Parts

A. Service Parts

Service Parts **LUM-OD-NM, LUM-OD-PM**

Lumonessen Outdoor Hearth Kit

Beginning Manufacturing Date: Jul 2023
Ending Manufacturing Date: Active

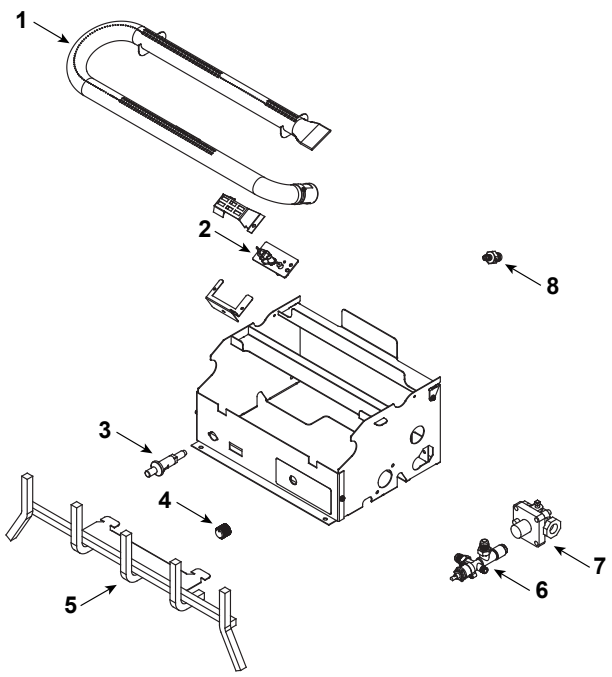

IMPORTANT: THIS IS DATED INFORMATION. Parts must be ordered from a dealer or distributor. **Hearth and Home Technologies does not sell directly to consumers**. Provide model number and serial number when requesting service parts from your dealer or distributor.

ITEM	DESCRIPTION	COMMENTS	PART NUMBER	Stocked at Depot
1	Burner, Tube	NG	SRV4625-300	Y
		Propane	SRV4625-302	Y
2	Pilot, Manual	NG	SRV4018-151	Y
		Propane	SRV4018-152	Y
3	Piezo Ignitor		SRV14D0503	Y
	Piezo Wire		SRV00K0632	Y
4	Knob, Control		SRV18D0603	
5	Grate Assembly		SRV4629-312	
6	Valve	NG & Propane	SRV4018-154	Y
7	Regulator	NG	SRV65D2039	Y
		Propane	SRV24D0306	Y
8	Orifice, Flare	NG	SRV4018-396	Y
		Propane	SRV4018-478	Y
	Flex Gas Line	Valve to Regulator	SRV4018-080	Y
		Valve to Burner	SRV4121-006	Y

10/23

HEARTH & HOME technologies

Service Parts

MTNOK-18

Mountain Oak 18” Log Set

Beginning Manufacturing Date: Jul 2203
Ending Manufacturing Date: Active

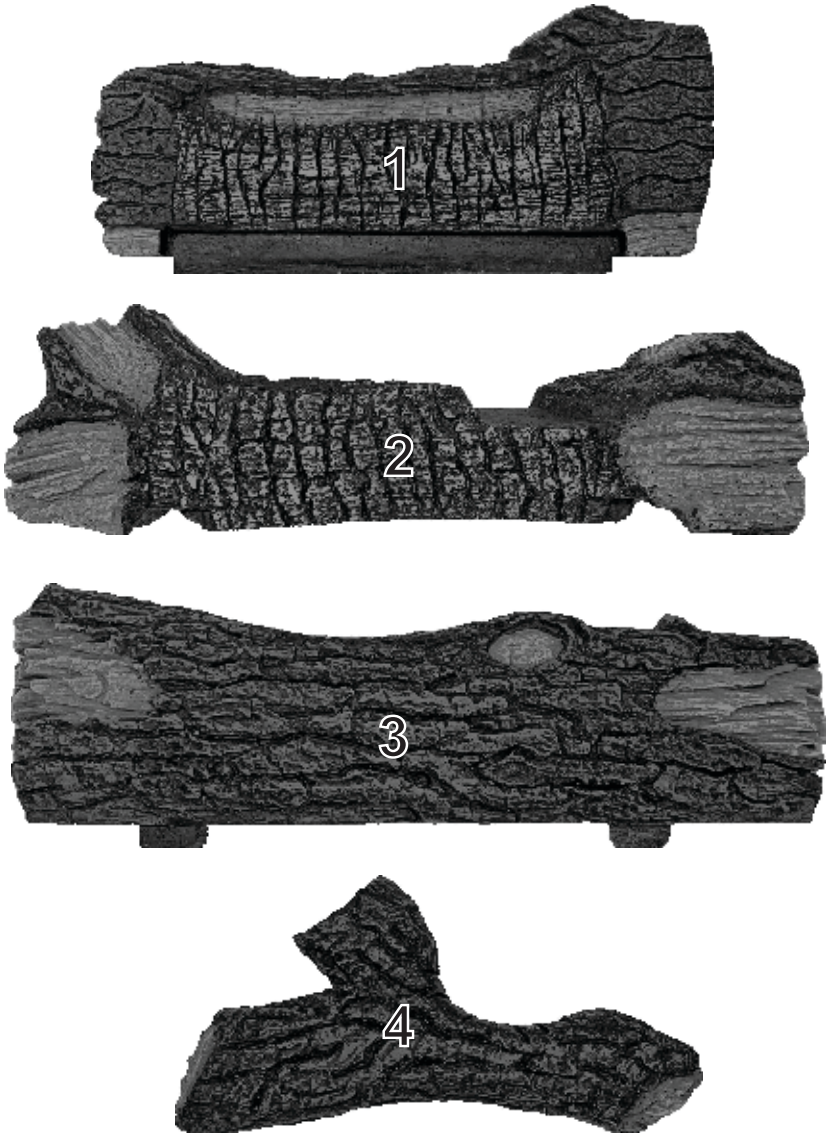

IMPORTANT: THIS IS DATED INFORMATION. Parts must be ordered from a dealer or distributor. **Hearth and Home Technologies does not sell directly to consumers**. Provide model number and serial number when requesting service parts from your dealer or distributor.

ITEM	DESCRIPTION	COMMENTS	PART NUMBER	Stocked at Depot
1	Log, Rear		SRV4625-701	
2	Log, Middle		SRV4625-702	
3	Log, Front		SRV4625-700	
4	Log, Top		SRV4625-703	

10/23

HEARTH & HOME technologies™

Service Parts

MTNOK-24

Mountain Oak 24” Log Set

Beginning Manufacturing Date: Jul 2203
Ending Manufacturing Date: Active

IMPORTANT: THIS IS DATED INFORMATION. Parts must be ordered from a dealer or distributor. **Hearth and Home Technologies does not sell directly to consumers**. Provide model number and serial number when requesting service parts from your dealer or distributor.

ITEM	DESCRIPTION	COMMENTS	PART NUMBER	Stocked at Depot
1	Log, Rear		SRV4625-711	
2	Log, Middle		SRV4625-712	
3	Log, Front		SRV4625-710	
4	Log, Top Right Hand		65D1034K	
5	Log, Top Left Hand		65D1035K	

10/23

HEARTH & HOME technologies

Service Parts

MTNOK-30

Mountain Oak 30” Log Set

Beginning Manufacturing Date: Jul 2203
Ending Manufacturing Date: Active

IMPORTANT: THIS IS DATED INFORMATION. Parts must be ordered from a dealer or distributor. **Hearth and Home Technologies does not sell directly to consumers**. Provide model number and serial number when requesting service parts from your dealer or distributor.

ITEM	DESCRIPTION	COMMENTS	PART NUMBER	Stocked at Depot
1	Log, Rear		SRV4625-711	
2	Log, Middle		SRV4625-722	
3	Log, Front		SRV4625-720	
4	Log, Top Right Hand		65D1034K	
5	Log, Top Left Hand		65D1035K	

10/23

HEARTH & HOME technologies™

Service Parts

MZMR-18

Mezmer 18" Log Set

Beginning Manufacturing Date: Jul 2203
Ending Manufacturing Date: Active

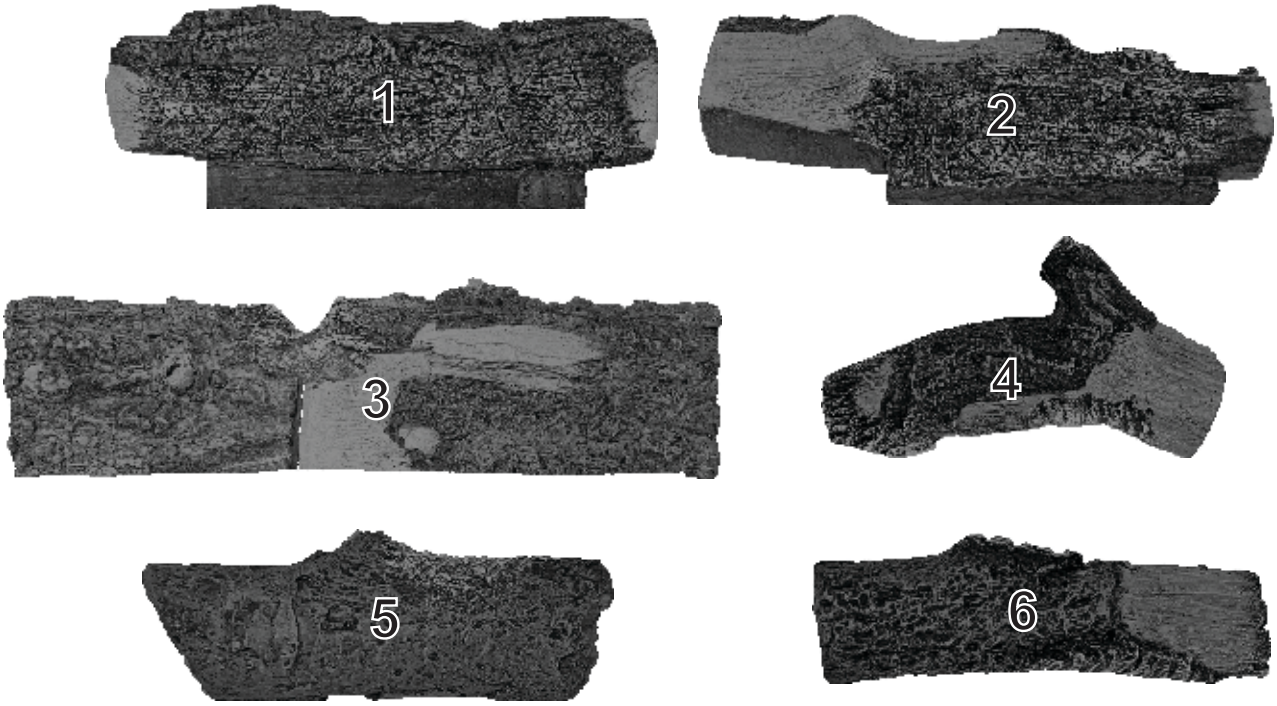

IMPORTANT: THIS IS DATED INFORMATION. Parts must be ordered from a dealer or distributor. **Hearth and Home Technologies does not sell directly to consumers**. Provide model number and serial number when requesting service parts from your dealer or distributor.

ITEM	DESCRIPTION	COMMENTS	PART NUMBER	Stocked at Depot
1	Log, Rear		SRV4625-731	
2	Log, Middle		SRV4625-732	
3	Log, Front		SRV4625-730	
4	Log, Top Right Hand		SRV4625-733	
5	Log, Top Left Hand		SRV4625-734	
6	Log, Top Center		SRV4625-735	

10/23

HEARTH & HOME technologies

Service Parts

MZMR-24

Mezmer 24” Log Set

Beginning Manufacturing Date: Jul 2203
Ending Manufacturing Date: Active

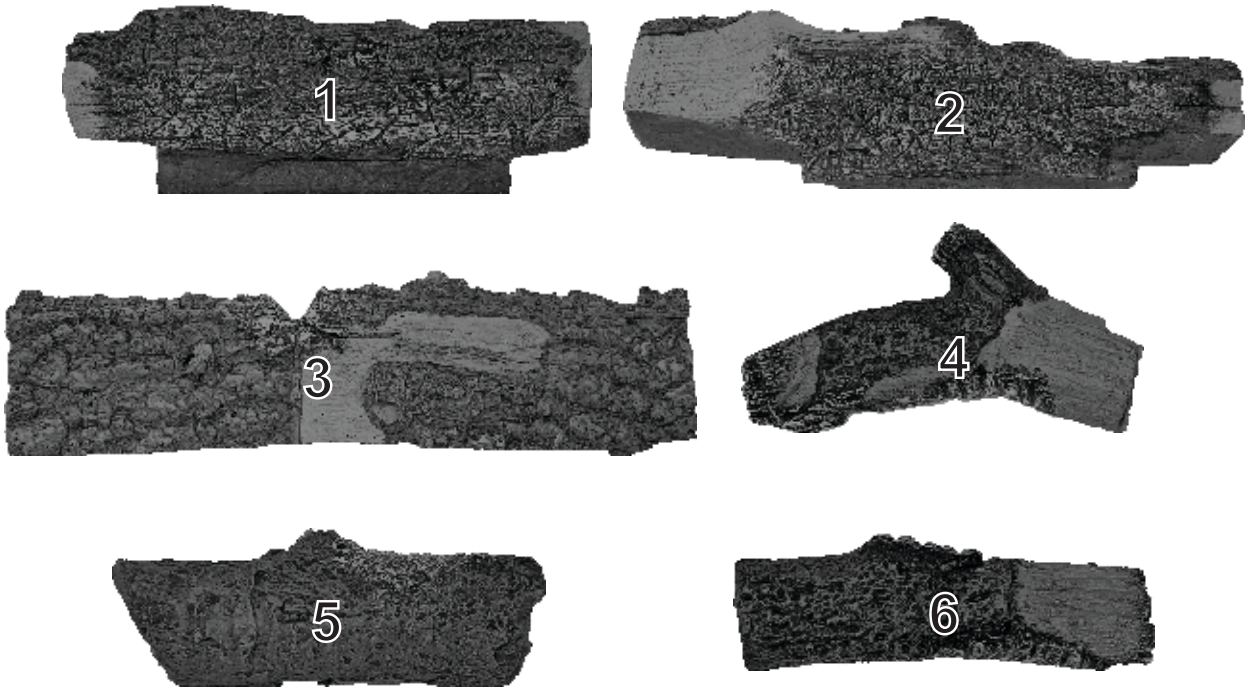

IMPORTANT: THIS IS DATED INFORMATION. Parts must be ordered from a dealer or distributor. **Hearth and Home Technologies does not sell directly to consumers**. Provide model number and serial number when requesting service parts from your dealer or distributor.

ITEM	DESCRIPTION	COMMENTS	PART NUMBER	Stocked at Depot
1	Log, Rear		SRV4625-741	
2	Log, Middle		SRV4625-742	
3	Log, Front		SRV4625-740	
4	Log, Top Right Hand		SRV4625-743	
5	Log, Top Left Hand		SRV4625-734	
6	Log, Top Center		SRV4625-735	

10/23

Mezmer 30” Log Set

Beginning Manufacturing Date: Jul 2203
Ending Manufacturing Date: Active

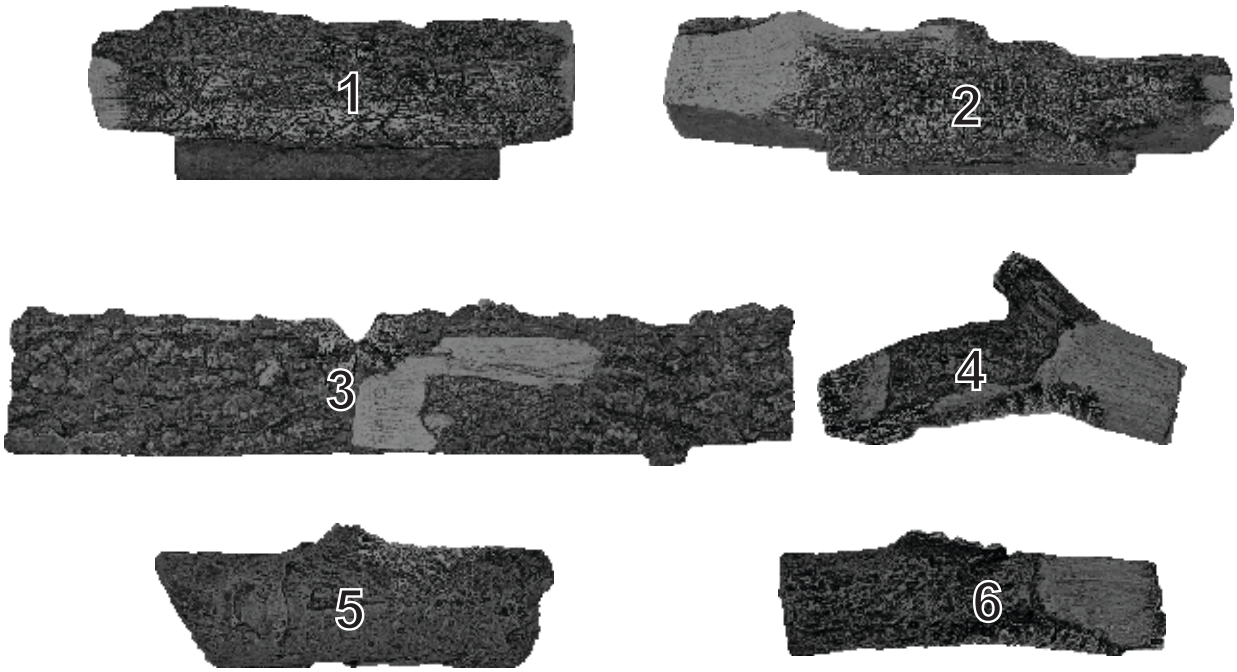

IMPORTANT: THIS IS DATED INFORMATION. Parts must be ordered from a dealer or distributor. **Hearth and Home Technologies does not sell directly to consumers**. Provide model number and serial number when requesting service parts from your dealer or distributor.

ITEM	DESCRIPTION	COMMENTS	PART NUMBER	Stocked at Depot
1	Log, Rear		SRV4625-741	
2	Log, Middle		SRV4625-742	
3	Log, Front		SRV4625-750	
4	Log, Top Right Hand		SRV4625-743	
5	Log, Top Left Hand		SRV4625-734	
6	Log, Top Center		SRV4625-735	

10/23

HEARTH & HOME technologies™

Service Parts

MZMRSP-18

Mezmer Split 18" Log Set

Beginning Manufacturing Date: Jul 2203
Ending Manufacturing Date: Active

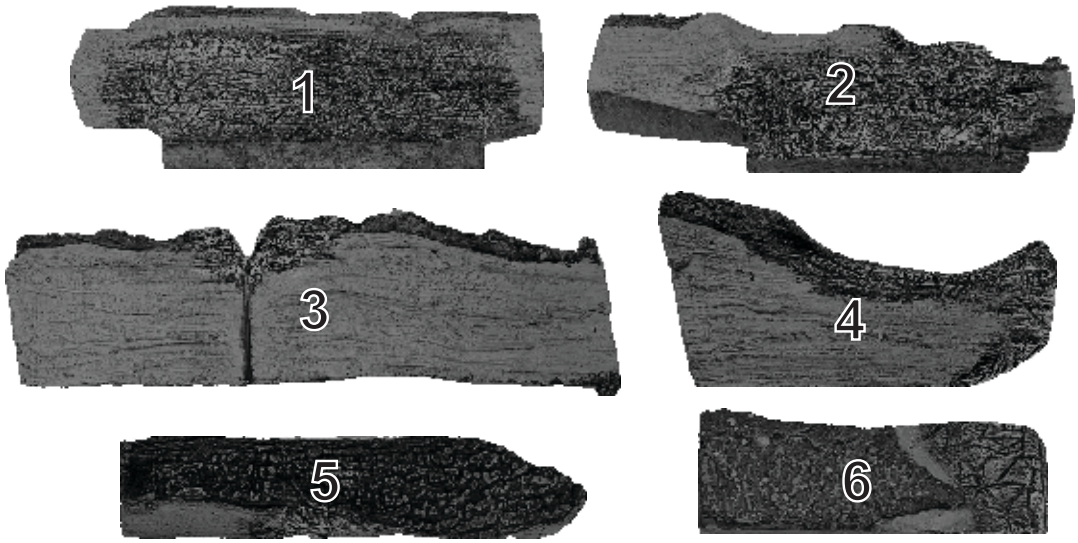

IMPORTANT: THIS IS DATED INFORMATION. Parts must be ordered from a dealer or distributor. **Hearth and Home Technologies does not sell directly to consumers**. Provide model number and serial number when requesting service parts from your dealer or distributor.

ITEM	DESCRIPTION	COMMENTS	PART NUMBER	Stocked at Depot
1	Log, Rear		SRV4625-761	
2	Log, Middle		SRV4625-732	
3	Log, Front		SRV4625-760	
4	Log, Top Right Hand		SRV4625-763	
5	Log, Top Left Hand		SRV4625-764	
6	Log, Top Center		SRV4625-765	

10/23

Mezmer Split 24" Log Set

Beginning Manufacturing Date: Jul 2203
Ending Manufacturing Date: Active

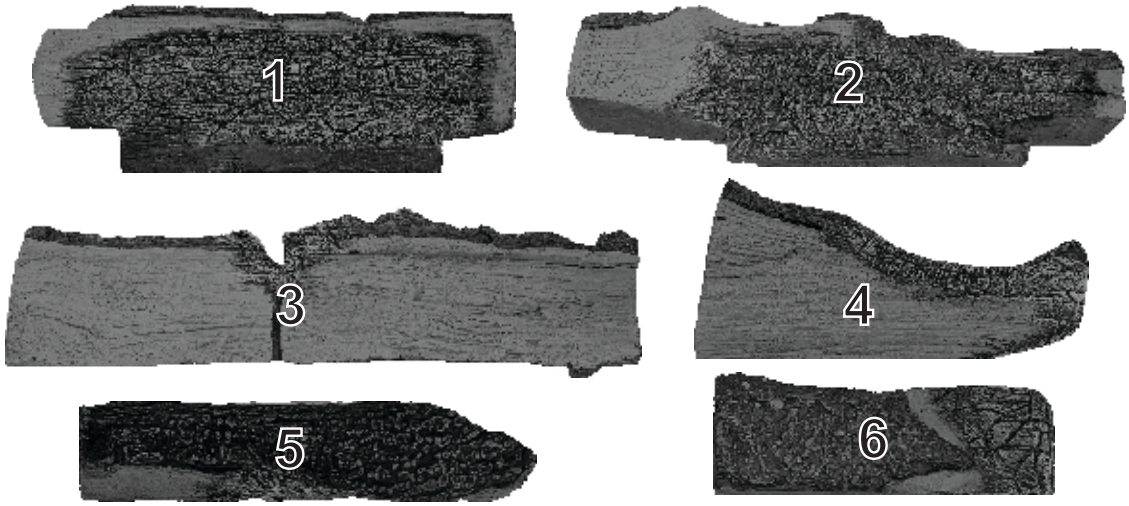

IMPORTANT: THIS IS DATED INFORMATION. Parts must be ordered from a dealer or distributor. **Hearth and Home Technologies does not sell directly to consumers**. Provide model number and serial number when requesting service parts from your dealer or distributor.

ITEM	DESCRIPTION	COMMENTS	PART NUMBER	Stocked at Depot
1	Log, Rear		SRV4625-771	
2	Log, Middle		SRV4625-742	
3	Log, Front		SRV4625-770	
4	Log, Top Right Hand		SRV4625-773	
5	Log, Top Left Hand		SRV4625-764	
6	Log, Top Center		SRV4625-765	

10/23

HEARTH & HOME technologies™

Service Parts

MZMRSP-30

Mezmer Split 30” Log Set

Beginning Manufacturing Date: Jul 2203
Ending Manufacturing Date: Active

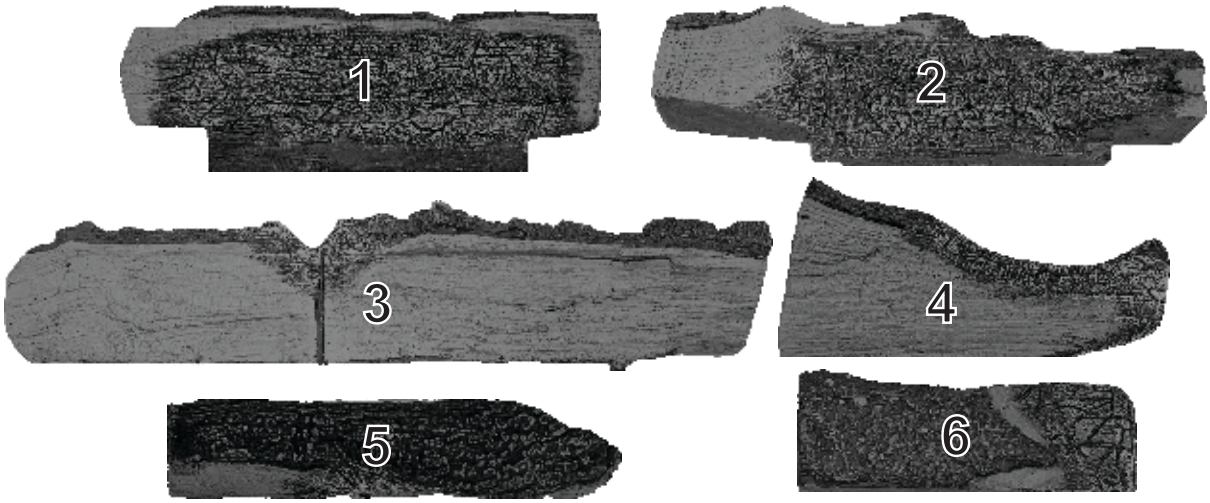

IMPORTANT: THIS IS DATED INFORMATION. Parts must be ordered from a dealer or distributor. **Hearth and Home Technologies does not sell directly to consumers**. Provide model number and serial number when requesting service parts from your dealer or distributor.

ITEM	DESCRIPTION	COMMENTS	PART NUMBER	Stocked at Depot
1	Log, Rear		SRV4625-771	
2	Log, Middle		SRV4625-742	
3	Log, Front		SRV4625-780	
4	Log, Top Right Hand		SRV4625-773	
5	Log, Top Left Hand		SRV4625-764	
6	Log, Top Center		SRV4625-765	

10/23

B. MASSACHUSETTS RESIDENTS ONLY

Please read and follow these special requirements

NOTE REGARDING VENTED PRODUCTS
This product must be installed by a licensed plumber or gas fitter when installed within the Commonwealth of Massachusetts.

Any residence with a direct vent product must have a carbon monoxide (CO) detector installed in the residence.

Installation of the fireplace or vented gas log in the State of Massachusetts requires the damper to be permanently removed or welded in the fully open position.

In addition, a naturally vented gas log may not be installed in a bedroom or bathroom in the State of Massachusetts.

Flex line installation must not exceed 36 inches and must have a T shutoff valve.

NOTE REGARDING VENT FREE PRODUCTS
This product must be installed by a licensed plumber or gas fitter when installed within the Commonwealth of Massachusetts.

In addition, vent free products may not be installed in a bedroom or bathroom regardless of size or type in the State of Massachusetts.

Flex line installation must not exceed 36 inches and must have a T shutoff valve.

CARBON MONOXIDE DETECTOR REQUIREMENTS
(2) Revise 10.8.3 by adding the following additional requirements:

(a) For all side wall horizontally vented gas fueled equipment installed in every dwelling, building or structure used in whole or in part for residential purposes, including those owned or operated by the Commonwealth and where the side wall exhaust vent termination is less than seven (7) feet above finished grade in the area of the venting, including but not limited to decks and porches, the following requirements shall be satisfied:

1. **Installation of carbon monoxide detectors.** At the time of installation of the side wall horizontal vented gas fueled equipment, the installing plumber or gas fitter shall observe that a hard wired carbon monoxide detector with an alarm and battery back-up is installed on the floor level where the gas equipment is to be installed. In addition, the installing plumber or gas fitter shall observe that a battery operated or hard wired carbon monoxide detector with an alarm is installed on each additional level of the dwelling, building or structure served by the side wall horizontal vented gas fueled equipment. It shall be the responsibility of the property owner to secure the services of qualified licensed professionals for the installation of hard wired carbon monoxide detectors

a. In the event that the side wall horizontally vented gas fueled equipment is installed in a crawl space or an attic, the hard wired carbon monoxide detector with alarm and battery back-up may be installed on the next adjacent floor level.

b. In the event that the requirements of this subdivision can not be met at the time of completion of installation, the owner shall have a period of thirty (30) days to comply with the above requirements; provided, however, that during said thirty (30) day period, a battery operated carbon monoxide detector with an alarm shall be installed.

2. **Approved Carbon Monoxide Detectors.** Each carbon monoxide detector as required in accordance with the above provisions shall comply with NFPA 720 and be ANSI/UL 2034 listed and IAS certified.

3. **Signage.** A metal or plastic identification plate shall be permanently mounted to the exterior of the building at a minimum height of eight (8) feet above grade directly in line with the exhaust vent terminal for the horizontally vented gas fueled heating appliance or equipment. The sign shall read, in print size no less than one-half (1/2) inch in size, “GAS VENT DIRECTLY BELOW. KEEP CLEAR OF ALL OBSTRUCTIONS.”

4. **Inspection.** The state or local gas inspector of the side wall horizontally vented gas fueled equipment shall not approve the installation unless, upon inspection, the inspector observes carbon monoxide detectors and signage installed in accordance with the provisions of 248 CMR 5.08(2)(a)1 through 4.

(b) **Exemptions:** The following equipment is exempt from 248 CMR 5.08(2)(a)1 through 4:

1. The equipment listed in Chapter 10 entitled "Equipment Not Required To Be Vented" in the most current edition of NFPA 54 as adopted by the Board; and

2. Product Approved side wall horizontally vented gas fueled equipment installed in a room or structure separate from the dwelling, building or structure used in whole or in part for residential purposes.

(c) **Manufacturer requirements — Gas Equipment Venting System Provided.** When the manufacturer of Product Approved side wall horizontally vented gas equipment provides a venting system design or venting system components with the equipment, the instructions provided by the manufacturer for installation of the equipment and the venting system shall include:

1. Detailed instructions for the installation of the venting system design or the venting system components; and

2. A complete parts list for the venting system design or venting system.

(d) **Manufacturer requirements — Gas Equipment Venting System Not Provided.** When the manufacturer of a Product Approved side wall horizontally vented gas fueled equipment does not provide the parts for venting the flue gases, but identifies “special venting systems,” the following requirements shall be satisfied by the manufacturer:

1. The referenced "special venting system" instructions shall be included with the appliance or equipment installation instructions; and

2. The “special venting systems” shall be Product Approved by the Board, and the instructions for that system shall include a parts list and detailed installation instructions.

(e) A copy of all installation instructions for all Product Approved side wall horizontally vented gas fueled equipment, all venting instructions, all parts lists for venting instructions, and/or all venting design

C. Contact Information

Hearth & Home Technologies
7571 215th Street West
Lakeville, MN 55044
www.hearthnhome.com

Please contact your dealer with any questions or concerns.
For the location of your nearest dealer,
please visit www.hearthnhome.com

- NOTES -

NOTICE

DO NOT DISCARD THIS MANUAL

- Important operating and maintenance instructions included.
- Read, understand and follow these instructions for safe installation and operation.
- Leave this manual with party responsible for use and operation.

This product may be covered by one or more of the following patents: (United States) 7077122, 7074035, 7234932, 7322819, 7422011, 7726300, 8147240, 9625149 or other U.S. and foreign patents pending.

2000-945F

Printed in U.S.A. - Copyright 2016