Service Parts QUARTZ42IFTN/QUARTZ42IFTL

Quartz 42" Gas Fireplace - DV

Beginning Manufacturing Date: March 2020
Ending Manufacturing Date: Oct 2026

Log Set Assembly

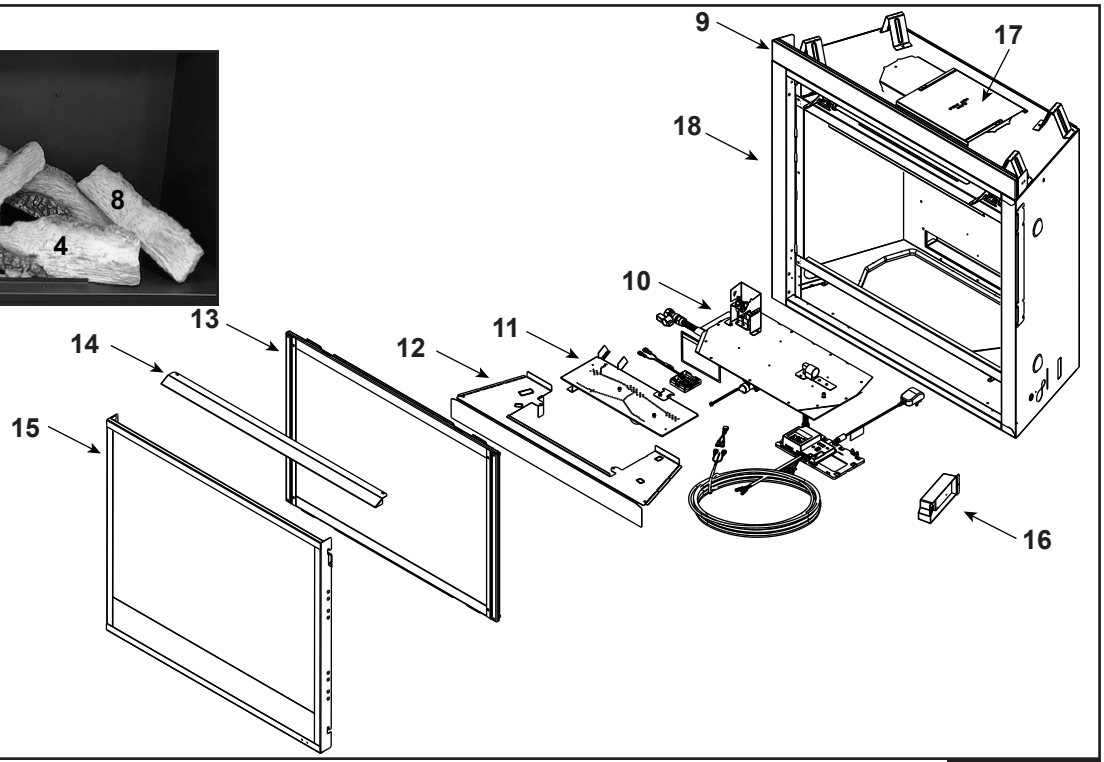

IMPORTANT: THIS IS DATED INFORMATION. Parts must be ordered from a dealer or distributor. **Hearth and Home Technologies does not sell directly to consumers**. Provide model number and serial number when requesting service parts from your dealer or distributor.

ITEM	DESCRIPTION	COMMENTS	PART NUMBER	Stocked at Depot
	Log Set Assembly		LOGS-QUARTZ42	Y
1	Rear Left Base Log		SRV2414-709	
2	Rear Right Base Log		SRV2414-710	
3	Front Left Base Log		SRV2413-703	
4	Front Right Base Log		SRV2414-711	
5	Top Left Log		SRV2413-705	
6	Middle Left Cross Log		SRV2413-706	
7	Middle Right Cross Log		SRV2413-707	
8	Top Right Log		SRV2414-712	
9	Drywall Support		2393-119	
10	Valve Assembly		**See following page**	
11	Burner Assembly		2414-007	Y
12	Base Pan		2414-111	
13	Glass Door Assembly		GLA-950TR	Y
14	Hood		2121-230	
15	Door		DBM42BK	
16	Junction box	Pre LC6531528	SRV4021-013	Y
		Post LC6531528	SRV2326-013	Y
17	Elbow Heat Shield		385-290	
18	Overlay Kit		SRV950-FACE	

Additional service part numbers appear on following page.

Service Parts QUARTZ42IFTN/QUARTZ42IFTL

Beginning Manufacturing Date: March 2020
Ending Manufacturing Date: Oct 2026

#10 Valve Assembly

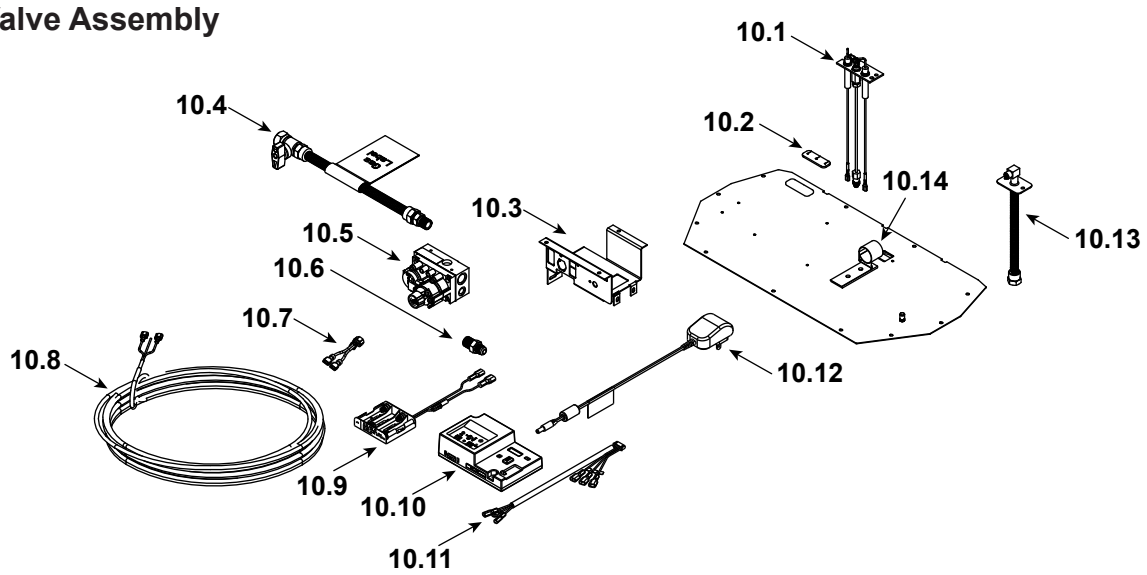

IMPORTANT: THIS IS DATED INFORMATION. Parts must be ordered from a dealer or distributor. **Hearth and Home Technologies does not sell directly to consumers**. Provide model number and serial number when requesting service parts from your dealer or distributor.

ITEM	DESCRIPTION	COMMENTS	PART NUMBER	Stocked at Depot
10.1	Pilot Assembly NG		SRV2106-169	Y
	Pilot Assembly Propane		SRV2106-170	Y
	Pilot Tube		SRV485-301	Y
10.2	3-Hole Grommet		SRV2118-420	
10.3	Valve Bracket		2118-104	
10.4	Flex Ball Valve Assembly		SRV302-320	Y
10.5	Valve NG		SRV2166-302	Y
	Valve Propane		2166-303	Y
10.6	Male Connector	Pkg of 5	303-315/5	
10.7	Jumper Wire		SRV2187-198	Y
10.8	Thermostat Wire Assembly		SRV2118-170	Y
10.9	Battery Pack**		SRV2326-134	Y
10.10	Module, IFT Control		SRV2326-130	Y
10.11	Wire Harness, IFT 6 Pin		SRV2326-132	Y
10.12	Transformer, 6 Volt Wall		SRV2326-131	Y
10.13	Bulkhead w/Flex Tube		SRV7000-156	Y
10.14	Shutter Bracket Assembly		2118-121	
	Orifice NG (#39C)		582-839	Y
	Orifice Propane (#53C)		582-853	Y

**Fuse for battery pack can be sourced locally, not a warranty item. Specs are 250v, 3A fuse, 3/4” long

Additional service part numbers appear on following page.

Service Parts QUARTZ42IFTN/QUARTZ42IFTL

Beginning Manufacturing Date: March 2020
Ending Manufacturing Date: Oct 2026

IMPORTANT: THIS IS DATED INFORMATION. Parts must be ordered from a dealer or distributor. **Hearth and Home Technologies does not sell directly to consumers**. Provide model number and serial number when requesting service parts from your dealer or distributor.

ITEM	DESCRIPTION	COMMENTS	PART NUMBER	Stocked at Depot
	Exhaust Restrictor		530-299	
	Gasket Assembly Contains Burner neck, shutter bracket, vent, seal cap, valve plate, and air passage gaskets		2118-080	
	Lava Rock	3 lbs	4021-297	
	Mineral Wool		050-721	
	Touch Up Paint		TUP-GBK-12	
	Shoulder Bolt	Pkg of 25	319-835-25	
CONVERSION KITS				
	Conversion Kit NG		NGKQUARTZ-IFT	
	Conversion Kit Propane		LPKQUARTZ-IFT	
	Pilot Orifice NG		SRV593-528	**Y**
	Pilot Orifice Propane		SRV593-527	**Y**
	Regulator NG		NGK-DXV-50	**Y**
	Regulator Propane		SRVLPK-DXV-50	**Y**