Installation Manual

Installation and Appliance Setup

***CAUTION! Risk of Fire! DO NOT** store instruction manuals inside fireplace cavity. High temperatures could cause a fire.*

INSTALLER: Leave this manual with the appliance, not inside the appliance.
CONSUMER: Retain this manual for future reference. Do not store inside the appliance.

***NOTICE: DO NOT** discard this manual!*

Models:
MER36MN
MER42MN

MAJESTIC

GAS-FIRED
c UL us
LISTED

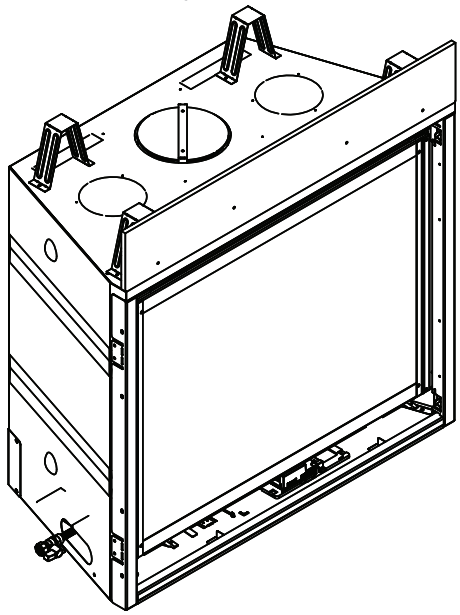

This appliance may be installed as an OEM installation in manufactured home (USA only) or mobile home and must be installed in accordance with the manufacturer's instructions and the *Manufactured Home Construction and Safety Standard, Title 24 CFR, Part 3280* in the United States, or the *Standard for Installation in Mobile Homes, CAN/CSA Z240 MH Series,* in Canada.

This appliance is only for use with the type(s) of gas indicated on the rating plate. This appliance is not convertible for use with other gases, unless a certified kit is used.

Pour demander un exemplaire en français de ce Manuel, visitez www.majesticproducts.com.

⚠ WARNING:
FIRE OR EXPLOSION HAZARD
Failure to follow safety warnings exactly could result in serious injury, death, or property damage.

- **DO NOT** store or use gasoline or other flammable vapors and liquids in the vicinity of this or any other appliance.
- **What to do if you smell gas**
  - **DO NOT** try to light any appliance.
  - **DO NOT** touch any electrical switch. **DO NOT** use any phone in your building.
  - Leave the building immediately.
  - Immediately call your gas supplier from a neighbor's phone. Follow the gas supplier's instructions.
  - If you cannot reach your gas supplier, call the fire department.
- Installation and service must be performed by a qualified installer, service agency, or the gas supplier.

⚠ DANGER

HOT GLASS WILL CAUSE BURNS.

DO NOT TOUCH GLASS UNTIL COOLED.

NEVER ALLOW CHILDREN TO TOUCH GLASS.

A barrier designed to reduce the risk of burns from the hot viewing glass is provided with this appliance and must be installed for the protection of children and other at-risk individuals.

Decorative barrier front must be ordered separately at time of appliance purchase. See Section 3.B.

⚠ Safety Alert Key:

- ***DANGER!*** *Indicates a hazardous situation which, if not avoided will result in death or serious injury.*
- ***WARNING!*** *Indicates a hazardous situation which, if not avoided could result in death or serious injury.*
- ***CAUTION!*** *Indicates a hazardous situation which, if not avoided, could result in minor or moderate injury.*
- ***NOTICE:*** *Used to address practices not related to personal injury.*

Note: *The term "recommend" or "recommended" does not indicate a requirement. It is a best practice suggested by Hearth & Home Technologies®.*

Table of Contents

Installation Standard Work Checklist 3

1 Product Specific and Important Safety Information

A. Appliance Certification 4
B. Glass Specifications 4
C. BTU Specifications 4
D. High Altitude Installations 4
E. Non-Combustible Materials Specification 4
F. Combustible Materials Specification 4
G. Electrical Codes 4
H. California 4
I. Requirements for the Commonwealth of Massachusetts . . 5

2 Getting Started

A. Design and Installation Considerations 6
➔ B. Good Faith Wall Surface / TV Guidelines 7
C. Tools and Supplies Needed 10
D. Inspect Appliance and Components 10

3 Framing and Clearances

➔ A. Appliance Weights and Dimensions 11
B. Decorative Barrier Front Dimension Diagrams 12
➔ C. Appliance Location and Clearances to Combustibles . . . 16
D. Constructing the Appliance Chase 24
E. Floor Protection 25

4 Termination Location and Vent Information

A. Approved Pipe 26
B. Vent Termination Minimum Clearances 26
C. Vent Terminal Clearances 28
D. Use of Elbows 29
➔ E. Vent Diagrams 30

5 Vent Clearances and Framing

➔ A. Vent Clearances to Combustibles 39
B. Wall Penetration Framing/Firestops 40
C. Ceiling Firestop/Floor Penetration Framing 41
D. Install Attic Insulation Shield 41

6 Appliance Preparation

➔ A. Vent Collar Preparation 42
B. Prepare For Heat Management 43
C. Securing and Leveling the Appliance 44
➔ D. Non-Combustible Material (Factory-Installed) 44

7 Venting

A. Assemble Vent Sections 45
B. Assemble Slip Sections 47
C. Secure the Vent Sections 48
D. Disassemble Vent Sections 48
E. Vertical Termination Requirements 49
F. Horizontal Termination Requirements 50

8 Electrical Information

A. General Information . . . . . 51 ➔
B. Wiring Requirements 53
C. Fan Installation 54
D. Service for Fan . . . . . 54 ➔

9 Gas Information

A. Fuel Conversion 55
B. Gas Pressure 55
C. Gas Connection and Gas Line Purging 55
D. High Altitude Installations 56
E. Air Shutter Setting 56
F. Service/Replace Appliance Gas Valve . . . . . 57 ➔

10 Finishing

A. Facing Material 58
B. Drywall Installation 59
C. Installing a Television 60
D. Mantel and Wall Projections 60
E. Hearth Extension 63
F. Decorative Barrier Front Dimensions for Finishing 63

11 Appliance Setup

A. Remove the Shipping Materials 67
B. Clean the Appliance 67
C. Install Black Glass Refractory 67
D. Install Driftwood Logs (Optional) 68
E. Install Glass Media 71
F. Install Rock Jig for Optional Rock Media (STONES-NATURAL) 72
G. IntelliFire Touch® Control System Setup 73
H. Fixed Glass Assembly Removal and Replacement 74
I. Install Decorative Barrier Front 74

12 Reference Materials

A. Approved Vent Components List 75
B. Accessories 76

➔ = Contains updated information.

Installation Standard Work Checklist

ATTENTION INSTALLER:

Follow this Standard Work Checklist

This standard work checklist is to be used by the installer in conjunction with, not instead of, the instructions contained in this installation manual.

Customer: _____

Lot/Address: _____

Model (circle one): MER36MN MER42MN

Date Installed:

Location of Fireplace: _____

Installer: _____

Dealer/Distributor Phone # _____

Serial #: _____

WARNING! Risk of Fire or Explosion! *Failure to install appliance according to these instructions could lead to a fire or explosion. Install ONLY components and accessories approved by Hearth & Home Technologies. Unapproved components and accessories could cause fireplace to overheat.*

Appliance Install	**YES**	**IF NO, WHY?**
Verified that the chase is insulated and sealed. (Pg. 24)	☐	_____
Verified clearances to combustibles. (Pg. 16-23)	☐	_____
Fireplace is leveled and secured. (Pg. 44)	☐	_____
Venting/Chimney Section 7 (Pg 45-50)		
Venting configuration complies to vent diagrams.	☐	_____
Venting installed, locked and secured in place with proper clearance. (May need to order separately.)	☐	_____
Firestops installed.	☐	_____
No insulation or foam materials in contact with venting or between ceiling/wall shield firestops.	☐	_____
Attic insulation shield installed.	☐	_____
Exterior wall/Roof flashing installed and sealed.	☐	_____
Terminations installed and sealed.	☐	_____
Electrical Section 8 (Pg 51-54)		
Unswitched power (110-120 VAC) provided to the appliance.	☐	_____
Switch wires properly installed.	☐	_____
Gas Section 9 (Pg 55-57)		
Proper appliance for fuel type.	☐	_____
Was a conversion performed?	☐	_____
Leak check performed and inlet pressure verified.	☐	_____
Verified proper air shutter setting for installation type.	☐	_____
Finishing Section 10 (Pg 58-66)		
Combustible materials not installed in non-combustible areas.	☐	_____
Verified all clearances meet installation manual requirements.	☐	_____
Mantels and wall projections comply with installation manual requirements.	☐	_____
Removed finishing strips prior to start up, if installed.	☐	_____
Appliance Setup Section 11 (Pg 67-74)		
All packaging and protective materials removed (inside & outside of appliance).	☐	_____
Refractory, media and optional logs installed correctly.	☐	_____
Glass assembly installed and secured.	☐	_____
Accessories installed properly.	☐	_____
Decorative barrier front properly installed. Need to order separately.	☐	_____
Manual bag and all of its contents are removed from inside/under the appliance and given to party responsible for use and operation.	☐	_____
Started appliance and verified no gas leaks exist.	☐	_____

Hearth & Home Technologies recommends the following:

- Photographing the installation and copying this checklist for your file.
- That this checklist remain visible at all times on the appliance until the installation is complete.

Comments: Further description of the issues, who is responsible (Installer/ Builder/ Other Trades, etc) and corrective action needed _____

_____

_____

Comments Communicated to party responsible _____ by _____ on _____

(Builder / Gen. Contractor/) (Installer) (Date)

➔ = Contains updated information.

2599-982 1/23

1 Product Specific and Important Safety Information

A. Appliance Certification

MODELS: **MER36MN, MER42MN**

LABORATORY: **Underwriters Laboratories, Inc. (UL)**

TYPE: **Direct Vent Heater**

STANDARD: **CSA / ANSI Z21.88-2019 • CSA 2.33-2019**

This product is listed to ANSI standards for "Vented Gas Fireplace Heaters" and applicable sections of "Gas Burning Heating Appliances for Manufactured Homes and Recreational Vehicles", and "Gas Fired Appliances for Use at High Altitudes". Also Certified for Installation in a Bedroom or a Bedsitting Room.

NOTICE: *This installation must conform with local codes. In the absence of local codes you must comply with the National Fuel Gas Code, ANSI Z223.1-latest edition in the U.S.A. and the CAN/CGA B149 Installation Codes in Canada.*

NOT INTENDED FOR USE AS A PRIMARY HEAT SOURCE. This appliance is tested and approved as either supplemental room heat or as a decorative appliance. It should not be factored as primary heat in residential heating calculations.

B. Glass Specifications

This appliance is equipped with ceramic glass. Replace glass only with ceramic glass. Please contact your dealer for replacement glass.

C. BTU Specifications

Models *(U.S. or Canada)*		**Maximum Input BTU/h**	**Minimum Input BTU/h**	**Orifice Size (DMS)**
MER36MN (NG)	*(0-2000 ft)*	34,000	17,000	#35
MER42MN (NG)	*(0-2000 ft)*	36,000	18,000	#32

D. High Altitude Installations

NOTICE: *If the heating value of the gas has been reduced, these rules do not apply. Check with your local gas utility or authorities having jurisdiction.*

When installing above 2000 feet elevation:

- In the USA: Reduce input rate 4% for each 1000 feet above 2000 feet.
- In CANADA: Input ratings are certified without a reduction of input rate for elevations up to 4500 feet (1370 m) above sea level. Please consult provincial and/or local authorities having jurisdiction for installations at elevations above 4500 feet (1370 m).

Check with your local gas utility to determine proper orifice size.

E. Non-Combustible Materials Specification

Material which will not ignite and burn. Such materials are those consisting entirely of steel, iron, brick, tile, concrete, slate, glass or plasters, or any combination thereof.

Materials that are reported as passing **ASTM E 136, Standard Test Method for Behavior of Materials in a Vertical Tube Furnace at 750 ºC** shall be considered non-combustible materials.

F. Combustible Materials Specification

Materials made of or surfaced with wood, compressed paper, plant fibers, plastics, or other material that can ignite and burn, whether flame proofed or not, or plastered or unplastered shall be considered combustible materials.

G. Electrical Codes

NOTICE: *This appliance must be electrically wired and grounded in accordance with local codes or, in the absence of local codes, with* **National Electric Code ANSI/NFPA 70-latest edition** *or the* **Canadian Electric Code CSA C22.1.**

- A 110-120 VAC circuit for this product must be protected with ground-fault circuit interrupter protection, in compliance with the applicable electrical codes, when it is installed in locations such as in bathrooms or near sinks.

H. California

WARNING: This product and the fuels used to operate this product (liquid propane or natural gas), and the products of combustion of such fuels, can expose you to chemicals including benzene, which is known to the State of California to cause cancer and reproductive harm. For more information go to: www.P65Warnings.ca.gov.

Note: The following requirements reference various Massachusetts and national codes not contained in this document.

I. Requirements for the Commonwealth of Massachusetts

For all side wall horizontally vented gas fueled equipment installed in every dwelling, building or structure used in whole or in part for residential purposes, including those owned or operated by the Commonwealth and where the side wall exhaust vent termination is less than seven (7) feet above finished grade in the area of the venting, including but not limited to decks and porches, the following requirements shall be satisfied:

Installation of Carbon Monoxide Detectors

At the time of installation of the side wall horizontal vented gas fueled equipment, the installing plumber or gas fitter shall observe that a hard wired carbon monoxide detector with an alarm and battery back-up is installed on the floor level where the gas equipment is to be installed. In addition, the installing plumber or gas fitter shall observe that a battery operated or hard wired carbon monoxide detector with an alarm is installed on each additional level of the dwelling, building or structure served by the side wall horizontal vented gas fueled equipment. It shall be the responsibility of the property owner to secure the services of qualified licensed professionals for the installation of hard wired carbon monoxide detectors.

In the event that the side wall horizontally vented gas fueled equipment is installed in a crawl space or an attic, the hard wired carbon monoxide detector with alarm and battery back-up may be installed on the next adjacent floor level.
In the event that the requirements of this subdivision can not be met at the time of completion of installation, the owner shall have a period of thirty (30) days to comply with the above requirements; provided, however, that during said thirty (30) day period, a battery operated carbon monoxide detector with an alarm shall be installed.

Approved Carbon Monoxide Detectors

Each carbon monoxide detector as required in accordance with the above provisions shall comply with NFPA 720 and be ANSI/UL 2034 listed and IAS certified.

Signage

A metal or plastic identification plate shall be permanently mounted to the exterior of the building at a minimum height of eight (8) feet above grade directly in line with the exhaust vent terminal for the horizontally vented gas fueled heating appliance or equipment. The sign shall read, in print size no less than one-half (1/2) in. in size, **"GAS VENT DIRECTLY BELOW. KEEP CLEAR OF ALL OBSTRUCTIONS".**

Inspection

The state or local gas inspector of the side wall horizontally vented gas fueled equipment shall not approve the installation unless, upon inspection, the inspector observes carbon monoxide detectors and signage installed in accordance with the provisions of 248 CMR 5.08(2)(a)1 through 4.

Exemptions

The following equipment is exempt from 248 CMR 5.08(2)(a)1 through 4:

- The equipment listed in Chapter 10 entitled "Equipment Not Required To Be Vented" in the most current edition of NFPA 54 as adopted by the Board; and
- Product Approved side wall horizontally vented gas fueled equipment installed in a room or structure separate from the dwelling, building or structure used in whole or in part for residential purposes.

MANUFACTURER REQUIREMENTS

Gas Equipment Venting System Provided

When the manufacturer of Product Approved side wall horizontally vented gas equipment provides a venting system design or venting system components with the equipment, the instructions provided by the manufacturer for installation of the equipment and the venting system shall include:

- Detailed instructions for the installation of the venting system design or the venting system components; and
- A complete parts list for the venting system design or venting system.

Gas Equipment Venting System NOT Provided

When the manufacturer of a Product Approved side wall horizontally vented gas fueled equipment does not provide the parts for venting the flue gases, but identifies "special venting systems", the following requirements shall be satisfied by the manufacturer:

- The referenced "special venting system" instructions shall be included with the appliance or equipment installation instructions; and
- The "special venting systems" shall be Product Approved by the Board, and the instructions for that system shall include a parts list and detailed installation instructions.

A copy of all installation instructions for all Product Approved side wall horizontally vented gas fueled equipment, all venting instructions, all parts lists for venting instructions, and/or all venting design instructions shall remain with the appliance or equipment at the completion of the installation.

See Gas Connection section for additional Commonwealth of Massachusetts requirements.

2 Getting Started

A. Design and Installation Considerations

WARNING! Risk of Fire or Explosion! *Read all instructions before starting the installation.*

Direct vent gas appliances are designed to operate with all combustion air siphoned from outside of the building and all exhaust gases expelled to the outside. No additional outside air source is required.

Installation MUST comply with local, regional, state and national codes and regulations. Consult insurance carrier, local building inspector, fire officials or authorities having jurisdiction over restrictions, installation inspection and permits.

Before installing, determine the following:

- Where the appliance is to be installed.
- The vent system configuration to be used.
- Gas supply piping requirements and space for access. See Section 9 Gas Information.
- Provisions for optional heat management system. If Passive Heat will be installed, consider location of discharge opening in relation to venting and other construction materials. Refer to the installation instructions included with the Passive Heat kit for details and the appropriate sections in this manual in terms of clearances and framing (Section 3), and finishing and mantels (Section 10).
- Electrical wiring requirements.
- Framing and finishing details.
- Whether optional accessories—devices such as a fan, wall switch, or remote control—are desired. See Section 12.B for approved accessories.

Installation and service of this appliance should be performed by qualified personnel. Hearth & Home Technologies recommends HHT Factory Trained or NFI certified professionals.

hearthED FACTORY TRAINING Fuel Your Fire

NFI NATIONAL FIREPLACE INSTITUTE® A CERTIFICATION AGENCY

Improper installation, adjustment, alteration, service or maintenance can cause injury or property damage. For assistance or additional information, consult a qualified service technician, service agency or your dealer.

B. Good Faith Wall Surface / TV Guidelines

NOTICE: *Surface temperatures listed above are taken with a temperature measuring probe as prescribed by the test standard used for appliance certification. Temperatures on walls or mantels taken with an infrared thermometer may yield increased temperatures of up to 30 °F (17 °C) or more depending on the thermometer settings and material characteristics being measured. Use appropriate finishing materials that are able to withstand these conditions. For additional finishing guidelines, see Section 10. Surface temperatures will vary due to factors such as ceiling height, room size, finishing materials and installation configuration.*

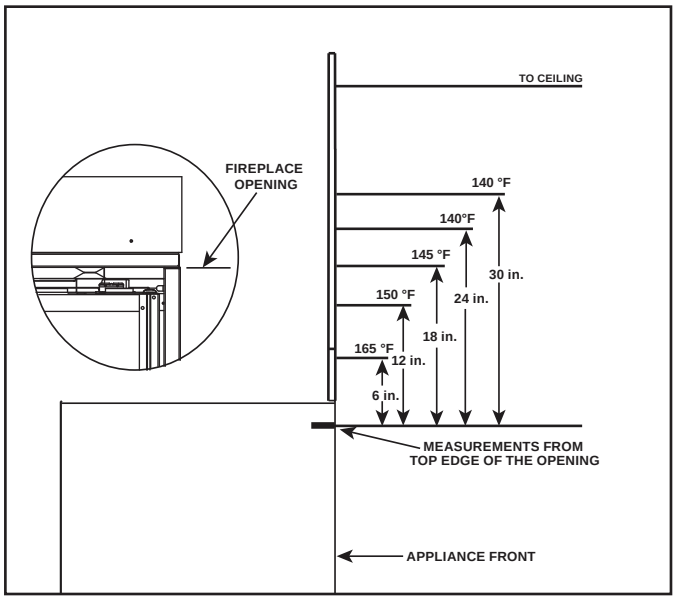

Figure 2.1 Good Faith Wall Surface Temperatures Above Appliance

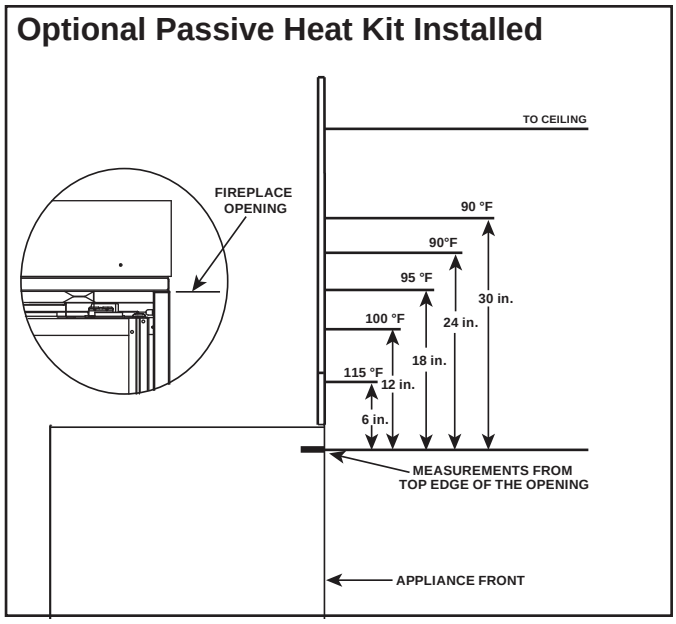

Figure 2.2 Good Faith Wall Surface Temperatures Above Appliance With Passive Heat Kit Installed

Good Faith Guidelines for TV Installations Above Appliance (Passive Heat Not Installed)

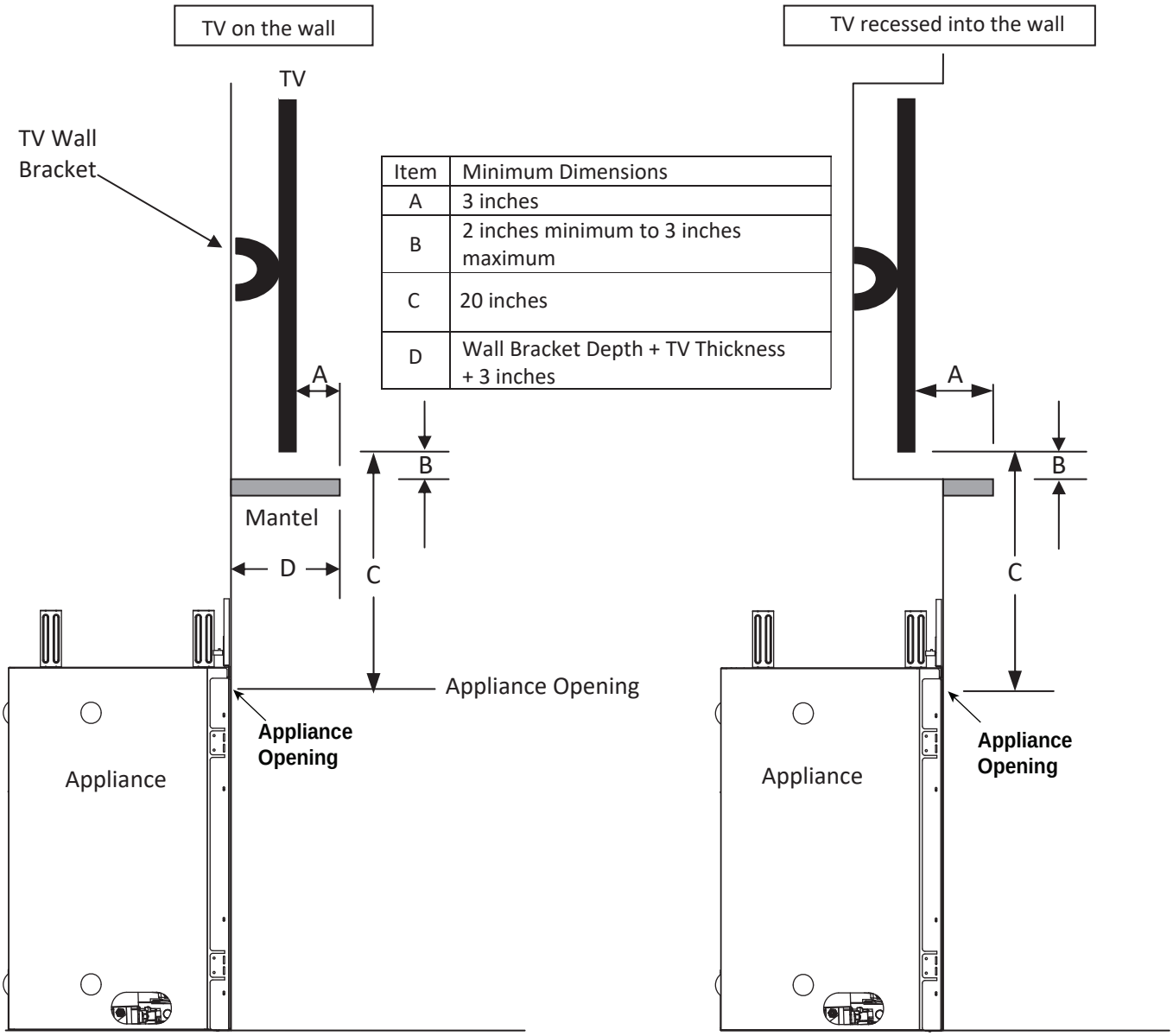

Item	Minimum Dimensions
A	3 inches
B	2 inches minimum to 3 inches maximum
C	20 inches
D	Wall Bracket Depth + TV Thickness + 3 inches

Notes:

1. These are good faith recommended clearances only and not a guarantee of compliance with all TV manufacturers' maximum allowable operating temperatures.
2. Since every home has unique air flow characteristics and maximum allowable operating temperatures can vary from manufacturer to manufacturer and from model to model, actual TV temperatures should be validated at the time of each installation. TVs should not be used in situations where the actual TV temperature exceeds the manufacturers' maximum allowable operating temperatures identified in the TV's technical specifications. Contact the TV's manufacturer directly if you cannot locate this information or have questions regarding the information.
3. Mantel height and depth must conform to mantel requirements specified in the appliance installation manual.
4. "C" dimension taken from the top of the hood or appliance opening to the bottom of the TV.
5. Suggestions on how to further reduce TV temperatures:
    a. Increase "A" dimension.
    b. Increase "C" dimension, however, increasing "B" dimension beyond maximum recommended typically results in higher temperatures.

Figure 2.3 Good Faith TV Guidelines

Good Faith Guidelines for TV Installations Above a Fireplace with Passive Heat Option and an Optional Fan

NOTICE: A mantel is required when both the Passive Heat option and an optional fan are installed. Life expectancy of the TV will be reduced if a mantel is not present. A mantel is not required when the Passive Heat option is installed and a fan is not present.

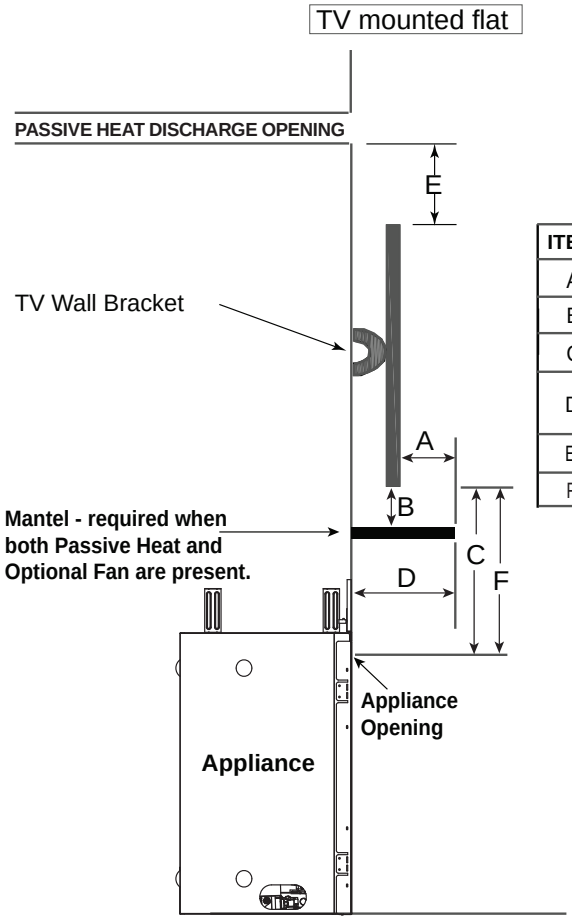

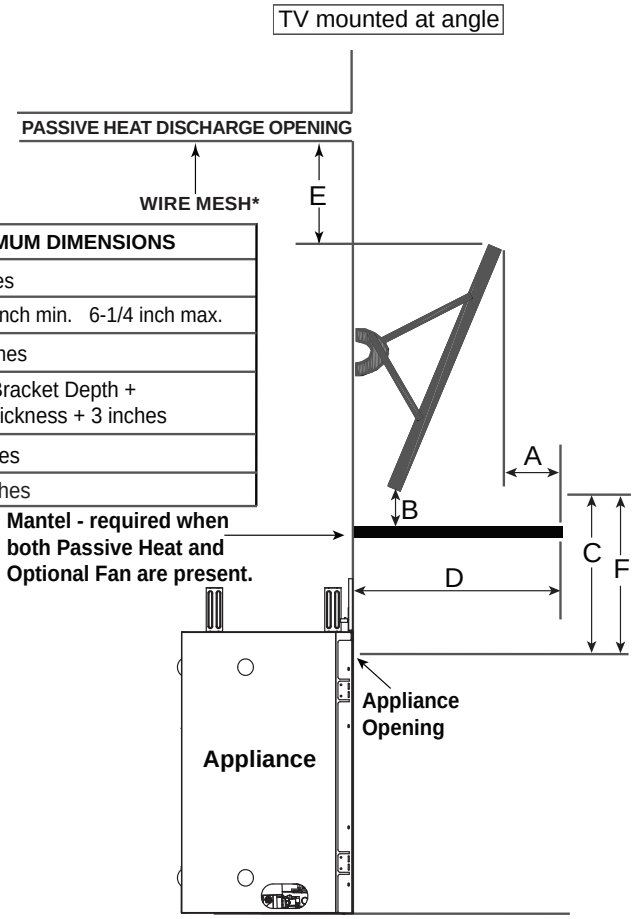

ITEM	MINIMUM DIMENSIONS
A	3 inches
B	5-1/4 inch min. 6-1/4 inch max.
C	12 inches
D	Wall Bracket Depth + TV Thickness + 3 inches
E	4 inches
F	12 inches

***** Mesh screen required for front discharge or open top discharge passive heat installations with discharge opening of three inches or greater.

NOTE: The TV installation requirements are the same regardless of whether the Passive Heat kit is installed with a top discharge, side discharge, or open top discharge.

"A" Dimension taken from the front of TV to front of the mantel.
"B" Dimension taken from the top of mantel to bottom of TV.
"C" Dimension taken from the top of the appliance opening to the bottom of the TV.
"D" Minimum mantel depth = Wall bracket thickness + TV thickness + 3 inches
"E" Dimension taken from the top of TV to bottom of discharge opening.
"F" Passive Heat kit is installed with no mantel and no fan. Dimension from appliance opening to bottom of TV.

Notes:

1. These are good faith recommended clearances only and not a guarantee of compliance with all TV manufacturers' maximum allowable operating temperatures.
2. Since every home has unique air flow characteristics and maximum allowable operating temperatures can vary from manufacturer to manufacturer and from model to model, actual TV temperatures should be validated at the time of each installation.
   TVs should not be used in situations where the actual TV temperature exceeds the manufacturers' maximum allowable operating temperatures identified in the TV's technical specifications. Contact the TV's manufacturer directly if you cannot locate this information or have questions regarding the information.
3. Mantel height and depth must conform to mantel requirements specified in the appliance installation manual.
4. Suggestions on how to further reduce TV temperatures:
   a. Increase "A" dimension.
   b. Increase "C" dimension, however, increasing "B" dimension beyond maximum recommended typically results in higher temperatures.

Figure 2.4 Good Faith Guidelines - Passive Heat Kit Installed

C. Tools and Supplies Needed

Before beginning the installation be sure that the following tools and building supplies are available.

Hand Tools	Tape measure
Level	Framing material
Manometer	Framing square
Voltmeter	Electric drill and bits (1/4 in., 1/8 in.)
Plumb line	Safety glasses/Gloves
Wrenches	Reciprocating saw
1/4 in. nut driver	Elongated pressure taps
Hammer	Flathead screwdriver
Tin Snips	

Non-corrosive leak check solution

1/2 - 3/4 in. length, #6 or #8 Self-drilling screws

Caulking material (300 ºF minimum continuous exposure rating)

D. Inspect Appliance and Components

WARNING! Risk of Fire or Explosion! *Damaged parts could impair safe operation.* ***DO NOT i****nstall damaged, incomplete or substitute components. Keep appliance dry.*

WARNING! Risk of Fire, Explosion or Electric Shock! DO NOT *use this appliance if any part has been under water. Call a qualified service technician to inspect the appliance and to replace any part of the control system and/or gas control which has been under water.*

- Carefully remove the appliance and components from the packaging.
- The vent system components and decorative barrier fronts may be shipped in separate packages.
- Media required.
- Report to your dealer any parts damaged in shipment.

Hearth & Home Technologies disclaims any responsibility for, and the warranty will be voided by, the following actions:

- Installation and use of any damaged appliance or vent system component.
- Modification of the appliance or vent system.
- Installation other than as instructed by Hearth & Home Technologies.
- Improper positioning of the logs/media (as applicable) or the glass assembly.
- Installation and/or use of any component part not approved by Hearth & Home Technologies.

3 Framing and Clearances

A. Appliance Weights and Dimensions

Dimensions are actual appliance dimensions. Use for reference only. For framing dimensions and clearances refer to Section 5.

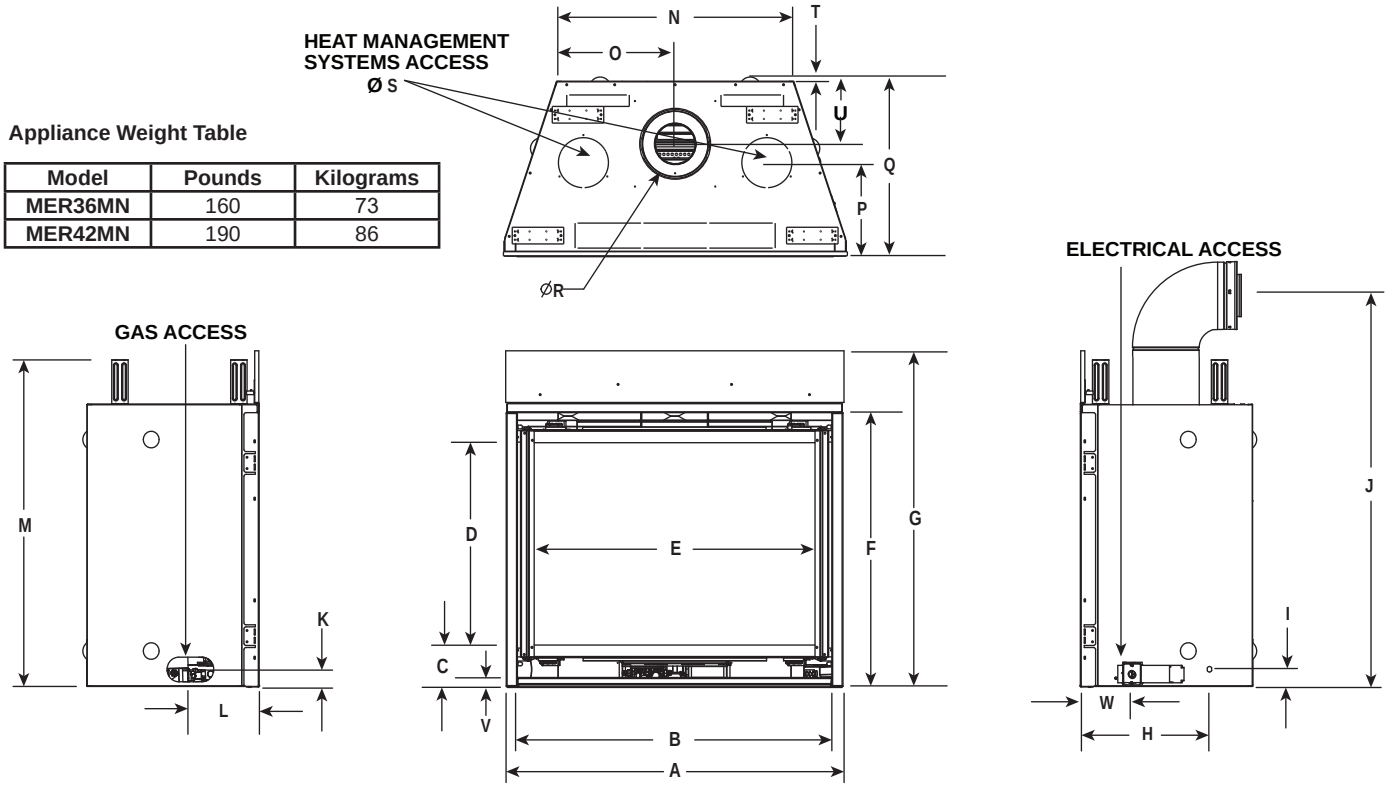

Appliance Weight Table

Model	Pounds	Kilograms
MER36MN	160	73
MER42MN	190	86

Appliance Dimensions Table - MER36MN

Location	Inches	Millimeters
A	41	1041
B	38-5/16	973
C	5-3/16	132
D	24-3/4	629
E	34-1/4	870
F	33-1/2	851
G	40-7/8	1038
H	16	406

Location	Inches	Millimeters
I	2-1/8	54
J	47-3/4	1212
K	2-1/16	52
L	8-1/2	216
M	39-13/16	1011
N	28-3/8	721
O	14-3/16	360
P	11-3/16	284

Location	Inches	Millimeters
Q	21-7/16	545
R	8-1/2	216
S	6	152
T	1/2	13
U	8	203
V	1-1/8	29
W	6-3/8	162

Appliance Dimensions Table - MER42MN

Location	Inches	Millimeters
A	48-1/16	1221
B	45-3/16	1148
C	5-3/16	132
D	26-11/16	678
E	41-1/4	1048
F	35-1/2	902
G	42-7/8	1089
H	15-3/4	400

Location	Inches	Millimeters
I	2-1/8	54
J	50-1/8	1273
K	2-1/16	52
L	8-5/16	211
M	41-13/16	1062
N	35-3/8	899
O	17-11/16	449
P	11-3/16	284

Location	Inches	Millimeters
Q	21-7/16	545
R	8	203
S	6	152
T	1/2	13
U	8	203
V	1-1/8	29
W	6-3/8	162

Figure 3.1 Appliance Dimensions (MER36MN, MER42MN)

B. Decorative Barrier Front Dimension Diagrams

MANOR DECORATIVE BARRIER FRONTS

IMPORTANT! This fireplace requires an installed decorative barrier front to prevent direct contact with the hot viewing glass. DO NOT operate the fireplace with the barrier removed.

Decorative barrier front must be ordered at time of fireplace purchase. If decorative barrier front is not present, contact dealer.

WARNING! Risk of Overheating! DO NOT *install combustible or non-combustible flooring or hearth material above top of bottom surround. Gap between bottom of decorative front and top of bottom surround must be maintained for proper air flow.*

Note: See Section 10 for hearth, mantel and finishing requirements, including complete information for combustible and non-combustible mantels.

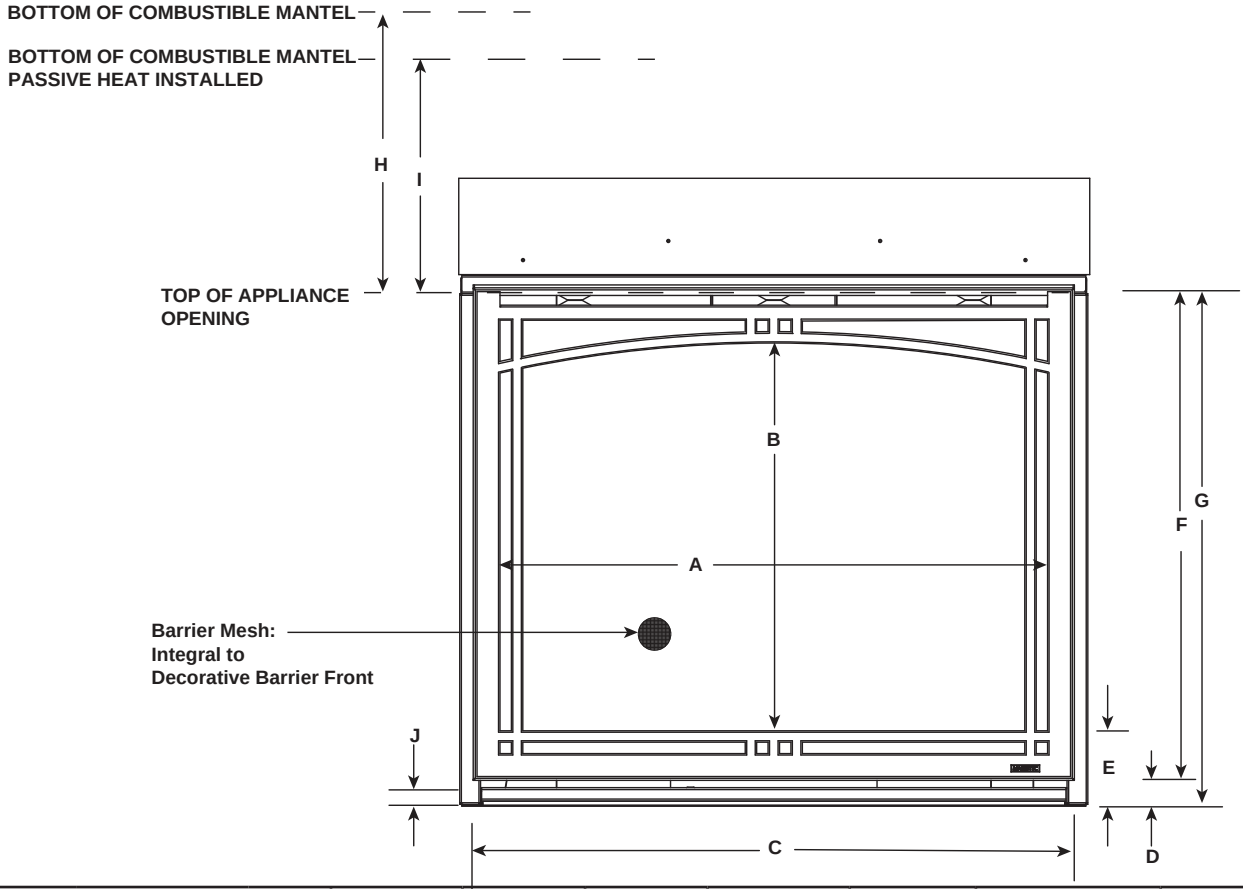

			A	B	C	D	E	F	G
MER36MN	MANOR36	in.	32-15/16	25-9/16	28-15/16	1-1/2	4-3/4	32-7/16	33-15/16
		mm	837	649	735	38	121	824	862
MER42MN	MANOR42	in.	39-8/16	27-3/8	35-15/16	1-1/2	4-3/4	34-7/16	35-15/16
		mm	1003	695	913	38	121	875	913

			H Minimum Combustible Mantel Height at 12 Inch Mantel Depth (No Passive Heat)	I Minimum Combustible Mantel Height at 12 Inch Mantel Depth with Passive Heat Installed	J Bottom of Appliance to Top of Bottom Surround
MER36MN	MANOR36	in.	19	6	1-1/8
		mm	483	152	29
MER42MN	MANOR42	in.	19	6	1-1/8
		mm	483	152	29

Figure 3.2 Decorative Barrier Front Dimensions - MANOR

ENSEMBLE DECORATIVE BARRIER FRONTS

IMPORTANT! This fireplace requires an installed decorative barrier front to prevent direct contact with the hot viewing glass. DO NOT operate the fireplace with the barrier removed.

Decorative barrier front must be ordered at time of fireplace purchase. If decorative barrier front is not present, contact dealer.

WARNING! Risk of Overheating! DO NOT *install combustible or non-combustible flooring or hearth material above top of bottom surround. Gap between bottom of decorative front and top of bottom surround must be maintained for proper air flow.*

Note: See Section 10 for hearth, mantel and finishing requirements, including complete information for combustible and non-combustible mantels.

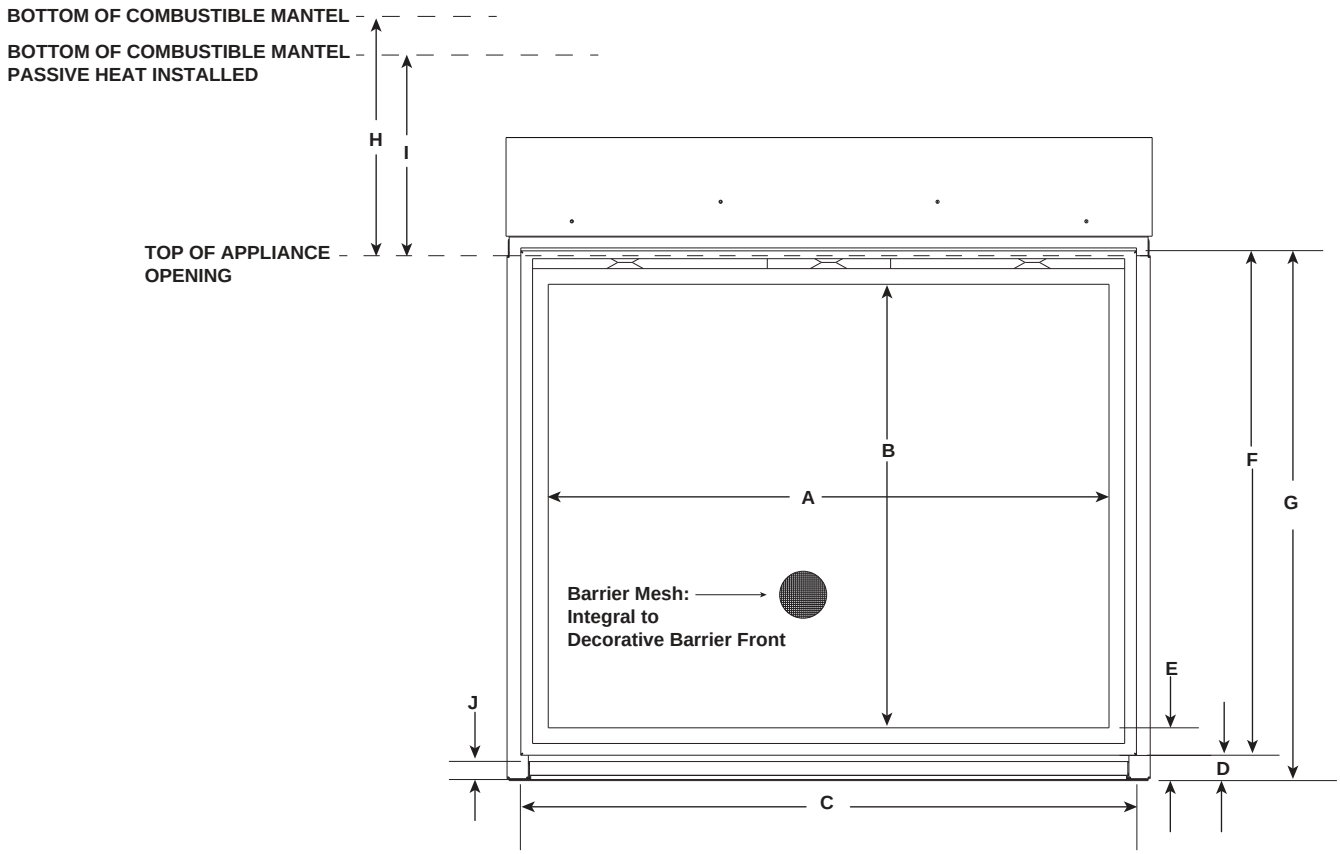

			A	B	C	D	E	F	G
MER36MN	ENSEMBLE36	in.	35-13/16	28-5/16	39-5/16	1-9/16	3-5/16	32-7/16	34
		mm	910	719	999	40	84	824	864
MER42MN	ENSEMBLE42	in.	42-13/16	30-5/16	46-5/16	1-9/16	3-5/16	34-7/16	36
		mm	1087	770	1176	40	84	875	914

			H Minimum Combustible Mantel Height at 12 Inch Mantel Depth (No Passive Heat)	I Minimum Combustible Mantel Height at 12 Inch Mantel Depth with Passive Heat Installed	J Bottom of Appliance to Top of Bottom Surround
MER36MN	ENSEMBLE36	in.	19	6	1-1/8
		mm	483	152	29
MER42MN	ENSEMBLE42	in.	19	6	1-1/8
		mm	483	152	29

Figure 3.3 Decorative Barrier Front Dimensions - ENSEMBLE

ESSENCE DECORATIVE BARRIER FRONTS

IMPORTANT! This fireplace requires an installed decorative barrier front to prevent direct contact with the hot viewing glass. DO NOT operate the fireplace with the barrier removed.

Decorative barrier front must be ordered at time of fireplace purchase. If decorative barrier front is not present, contact dealer.

WARNING! Risk of Overheating! DO NOT *install combustible or non-combustible flooring or hearth material above top of bottom surround. Gap between bottom of decorative front and top of bottom surround must be maintained for proper air flow.*

Note: See Section 10 for hearth, mantel and finishing requirements, including complete information for combustible and non-combustible mantels.

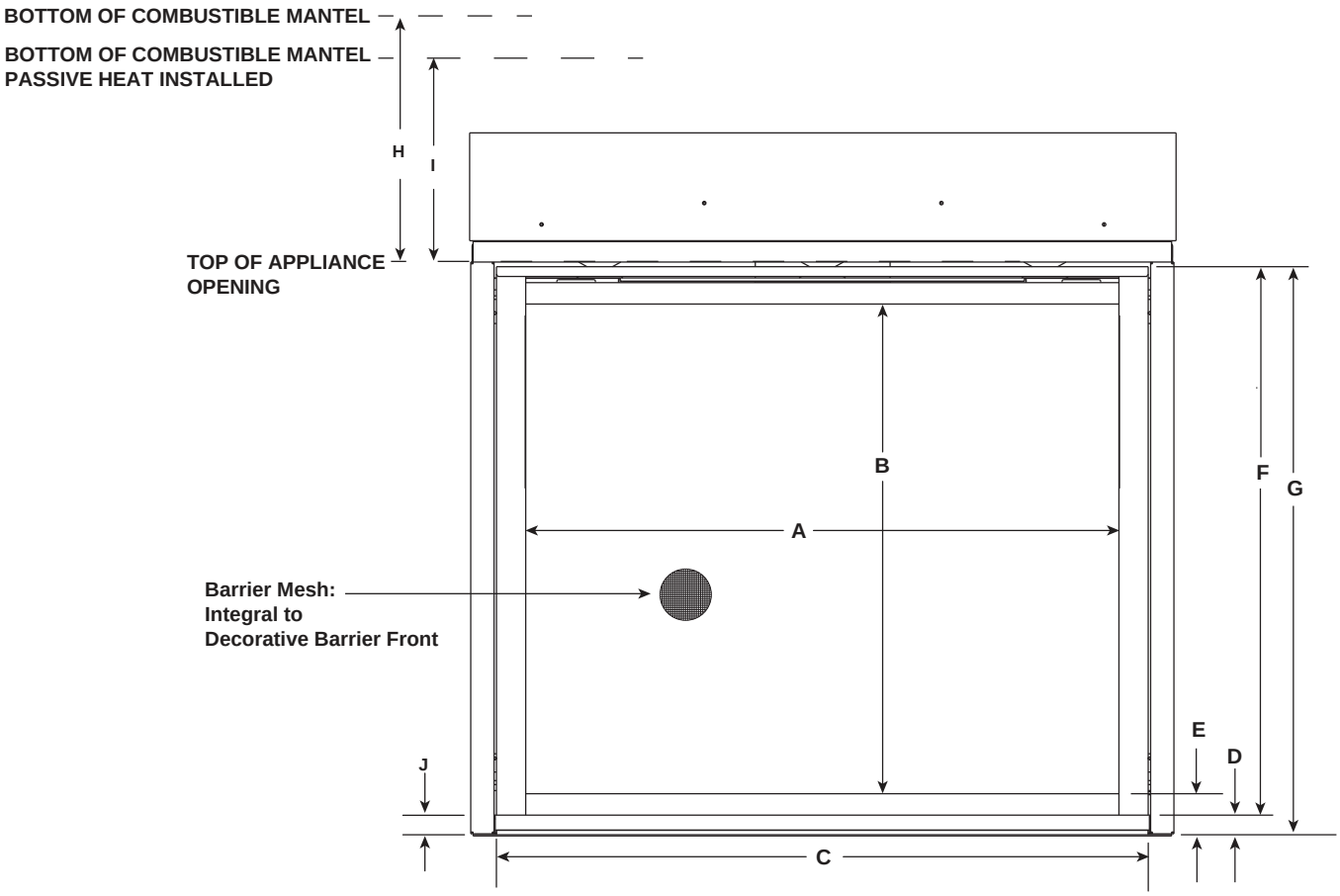

			A	B	C	D	E	F	G
MER36MN	ESSENCE36BK ESSENCECV36BK	in.	34-11/16	28-11/16	38	1-3/8	2-5/8	32	33-3/8
		mm	881	729	965	35	67	813	848
MER42MN	ESSENCE42BK ESSENCECV42BK	in.	41-3/4	30-5/8	45-1/16	1-3/8	2-5/8	34	35-3/8
		mm	1061	778	1145	35	67	864	899

			H Minimum Combustible Mantel Height at 12 Inch Mantel Depth (No Passive Heat)	I Minimum Combustible Mantel Height at 12 Inch Mantel Depth with Passive Heat Installed	J Bottom of Appliance to Top of Bottom Surround
MER36MN	ESSENCE36BK ESSENCECV36BK	in.	19	6	1-1/8
		mm	483	152	29
MER42MN	ESSENCE42BK ESSENCECV42BK	in.	19	6	1-1/8
		mm	483	152	29

Figure 3.4 Decorative Barrier Front Dimensions - ESSENCE

VENTURA DECORATIVE BARRIER FRONTS

IMPORTANT! This fireplace requires an installed decorative barrier front to prevent direct contact with the hot viewing glass. DO NOT operate the fireplace with the barrier removed.

Decorative barrier front must be ordered at time of fireplace purchase. If decorative barrier front is not present, contact dealer.

***WARNING! Risk of Overheating! DO NOT** install combustible or non-combustible flooring or hearth material above top of bottom surround. Gap between bottom of decorative front and top of bottom surround must be maintained for proper air flow.*

Note: See Section 10 for hearth, mantel and finishing requirements, including complete information for combustible and non-combustible mantels.

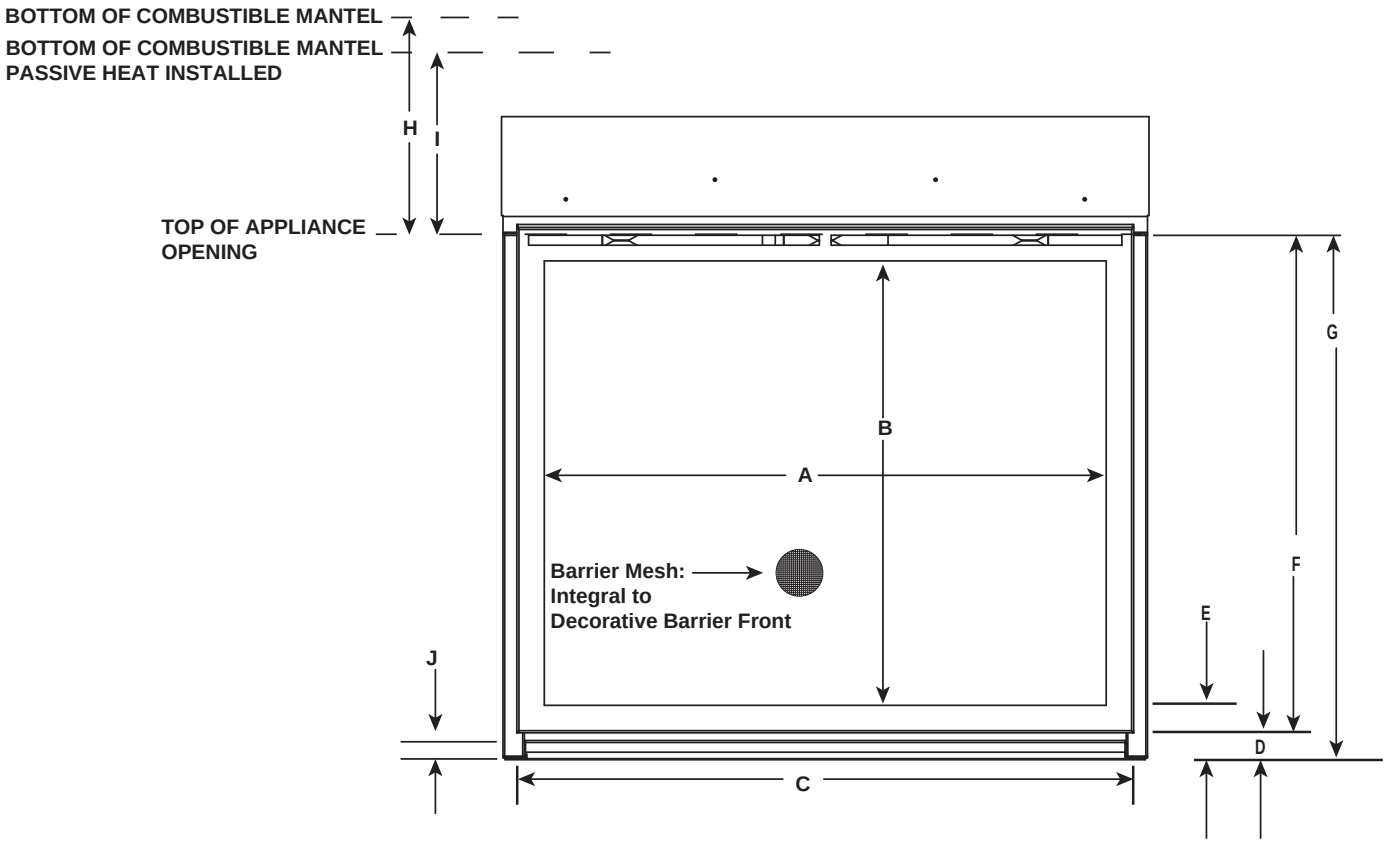

			A	B	C	D	E	F	G
MER36MN	VENTURA36	in.	35-13/16	28-5/16	39-5/16	1-9/16	3-5/16	32-7/16	34
		mm	910	719	960	40	84	824	864
MER42MN	VENTURA42	in.	42-13/16	30-5/16	46-5/16	1-9/16	3-5/16	34-7/16	36
		mm	1087	770	1176	40	84	875	914

			H Minimum Combustible Mantel Height at 12 Inch Mantel Depth (No Passive Heat)	I Minimum Combustible Mantel Height at 12 Inch Mantel Depth with Passive Heat Installed	J Bottom of Appliance to Top of Bottom Surround
MER36MN	VENTURA36	in.	19	6	1-1/8
		mm	483	152	29
MER42MN	VENTURA42	in.	19	6	1-1/8
		mm	483	152	29

Figure 3.5 Decorative Barrier Front Dimensions - VENTURA

C. Appliance Location and Clearances to Combustibles

WARNING! Risk of Fire or Burns! *Provide adequate clearance around air openings and for service access. Due to high temperatures, the appliance should be located out of traffic and away from furniture and draperies.*

When selecting a location for the appliance it is important to consider the required clearances to walls and allow sufficient clearance for heat management systems venting. Refer to Figure 3.6 for Heat-Zone-Gas and Heat-Out-Gas heat management systems.

Refer to Figures 3.11-3.13 for information regarding framing when the Passive Heat Kit is installed. Install the Passive Heat Kit per the instructions provided with the kit.

NOTICE: *Illustrations reflect typical installations and are FOR DESIGN PURPOSES ONLY. Illustrations/diagrams are not drawn to scale. Actual installation may vary due to individual design preference.*

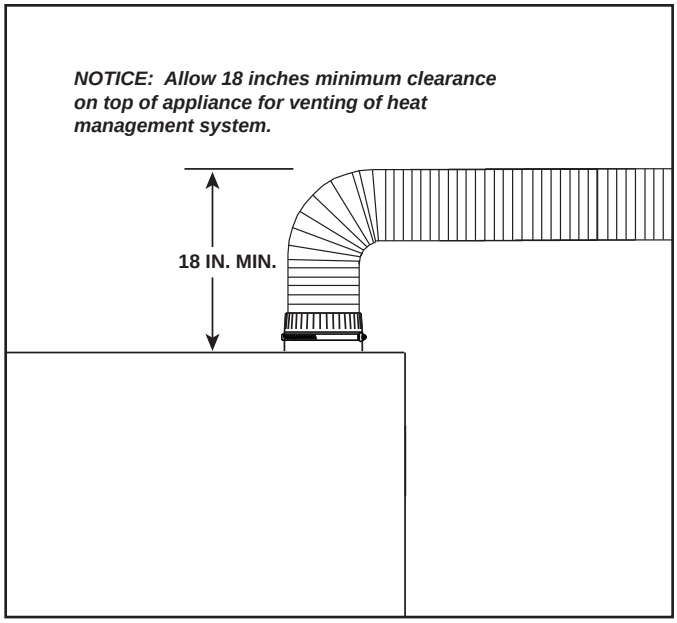

Figure 3.6 Clearance for Heat Management System

Protected Outdoor Applications

WARNING! Risk of Overheating! *Failure to follow instructions for outdoor installation could result in appliance overheating and/or damage to appliance and components.*

This appliance is approved for use outdoors (outdoor rooms, patios, decks, three season rooms, freestanding structures, etc.) when protected from direct water impingement and when installed in accordance with the guidelines below.

- Overhang requirements must be applied to both the front and sides of the fireplace finished opening.
- Follow all product installation instructions; required clearances must be maintained with respect to the house wrap, wall, finishing material, and mantels.
- If the fireplace will be in contact with salt water spray or pool chemicals, then a fireplace model designed specifically for outdoor installation is recommended to avoid oxidation.
- Changes in surface finish due to outdoor environment may occur.
- When installed in areas prone to blowing and drifting snow, it is recommended that the covered area have screen sides.
- Follow all building codes, including those addressing fireplace penetration of an exterior building envelope.

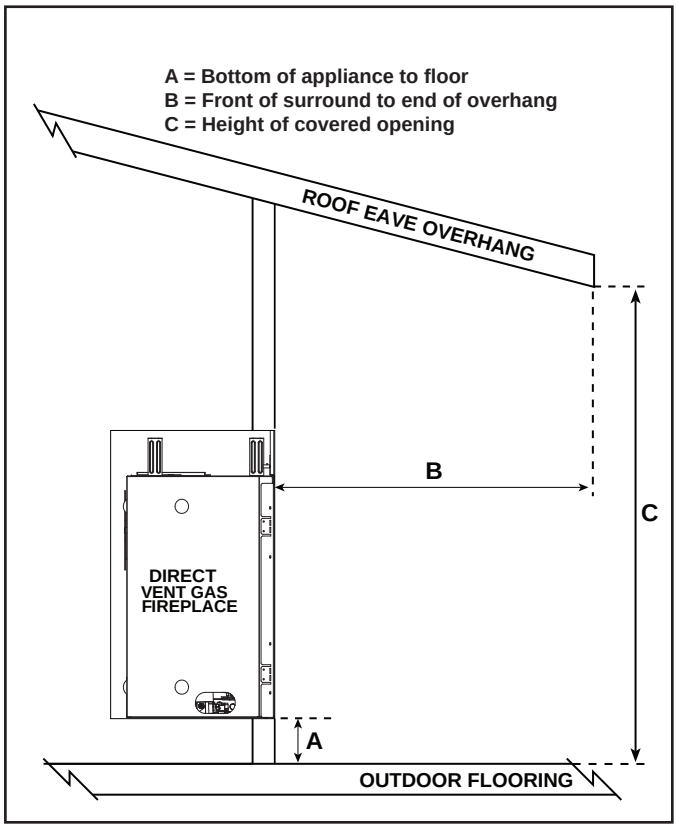

Figure 3.7 Protected Outdoor Applications - Dimensions

FORMULA MATRIX		
A	B	C
0-6 in.	Same as height of covered opening	Height of covered opening
6-12 in.	0.75 x height of covered opening	Height of covered opening
Greater than 12 in.	0.5 of height of covered opening	Height of covered opening

For Example:

If the opening height (C) is 8 ft., and the distance from the bottom of the appliance to the floor is 12 in. (A), then the distance from the front of the surround to the end of the overhang (B) must be 6 ft. (0.75 x 8).

EXAMPLE MATRIX			
Minimum clearance examples for installing fireplace in covered area with two variables: 1. Bottom of the appliance to the floor 2. Front of the surround to the end of the overhang			
A	If height of opening is 8 ft	If height of opening is 9 ft	If height of opening is 10 ft
0-6 in.	8 ft.	9 ft.	10 ft.
6-12 in.	6 ft.	6-3/4 ft.	7-1/2 ft.
Greater than 12 in.	4 ft.	4-1/2 ft.	5 ft.

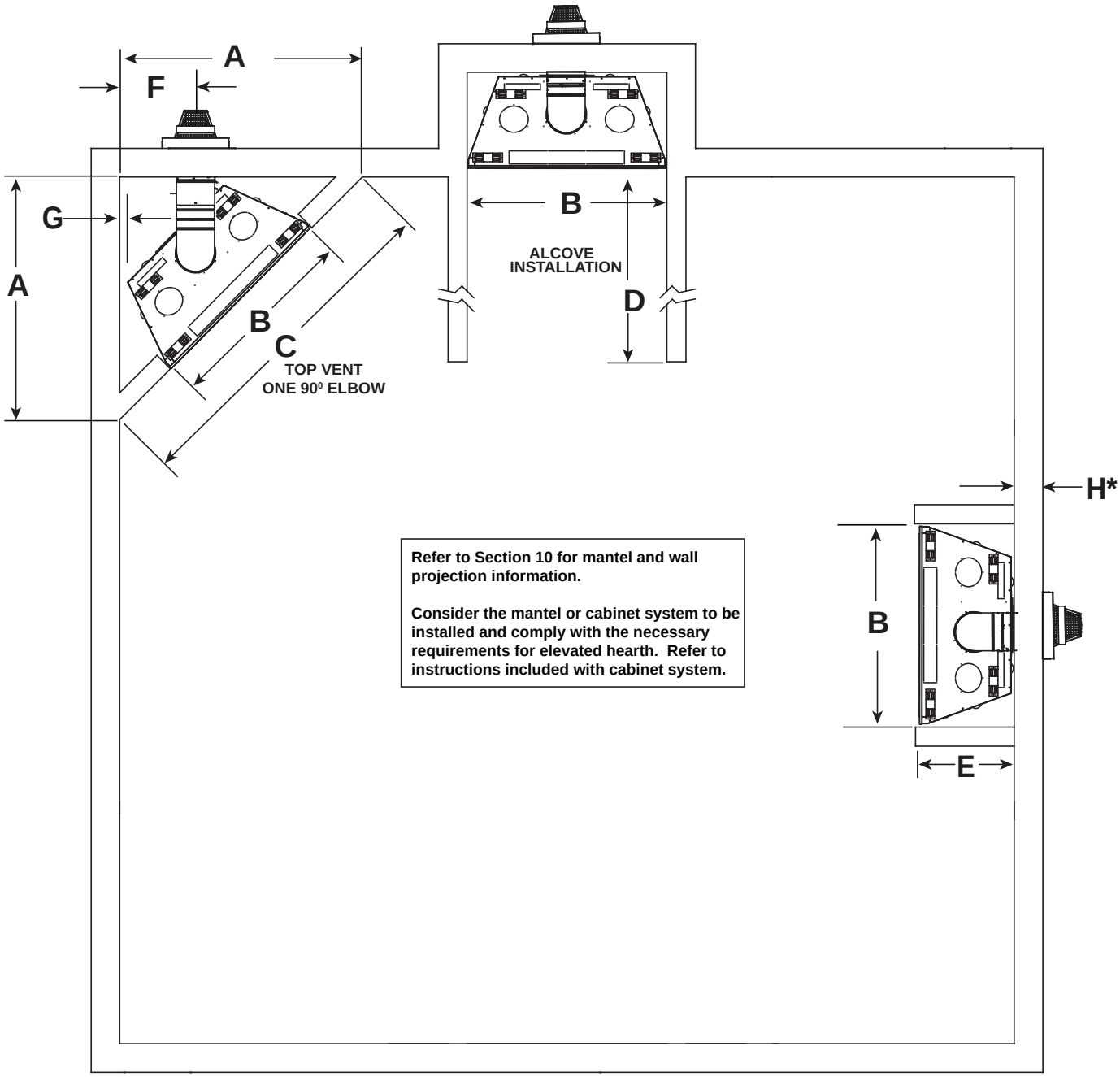

H* = When exterior wall is constructed from 2 x 4 material, a termination cap with effective length equal to the DVP-TRAP1 is required. See Figure 3.9.

		A	B	C	D
MER36MN	IN.	51	42	72	See Section 10 Mantel Projections
	mm	1295	1067	1829	
MER42MN	IN.	55-7/8	49	79	
	mm	1419	1245	2007	

		E	F	G	H*
MER36MN	IN.	22	17-3/4	1/2	For terminations through a 2 x 4 wall, see Figure 3.9.
	mm	559	451	13	
MER42MN	IN.	22	19-3/4	1/2	
	mm	559	502	13	

Figure 3.8 Appliance Locations

Top Vent DVP-TRAP1 Exception

For installations that are top vented and horizontally terminated with a 90 degree elbow directly off the minimum 6 inch vertical and minimum vent run, a termination cap with effective length equal to the DVP-TRAP1 is **REQUIRED.** Interior and exterior wall sheathing 1/2 inch thick and 2 X 4 exterior wall studs are also assumed for this scenario.

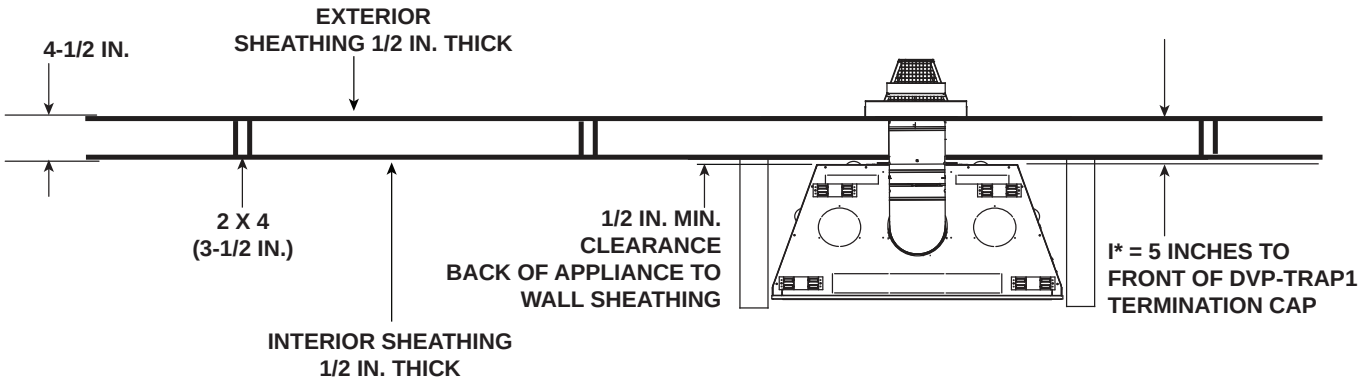

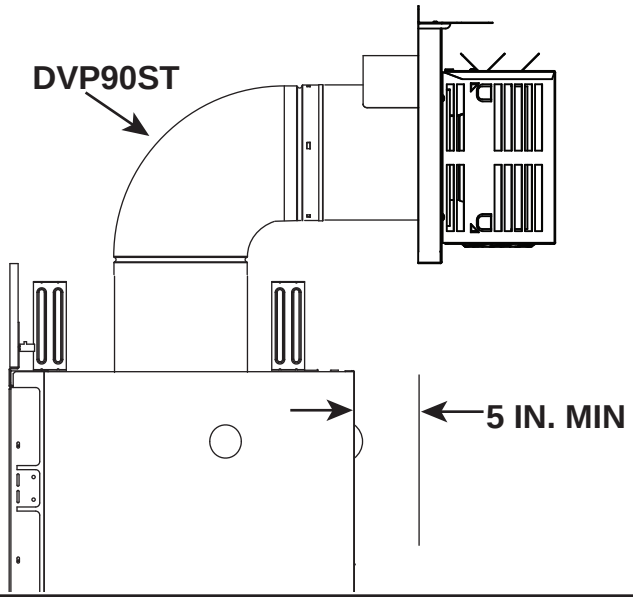

Figure 3.9 DVP-TRAP1 Exception (2 x 4 Construction)

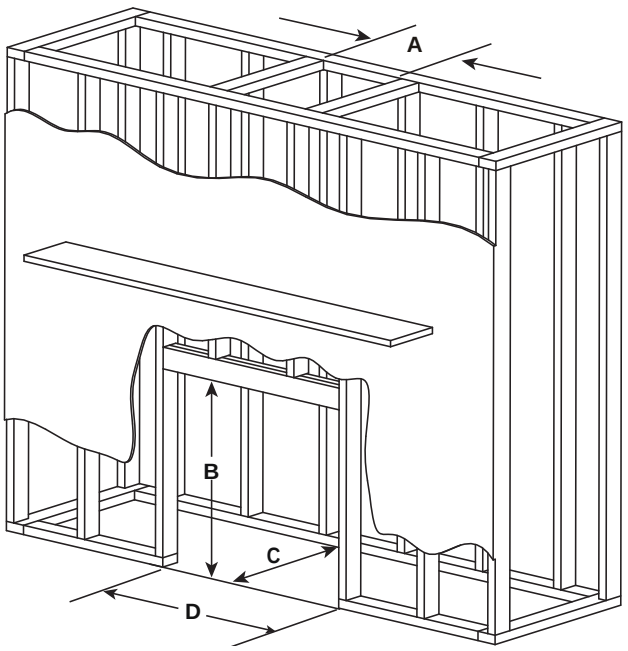

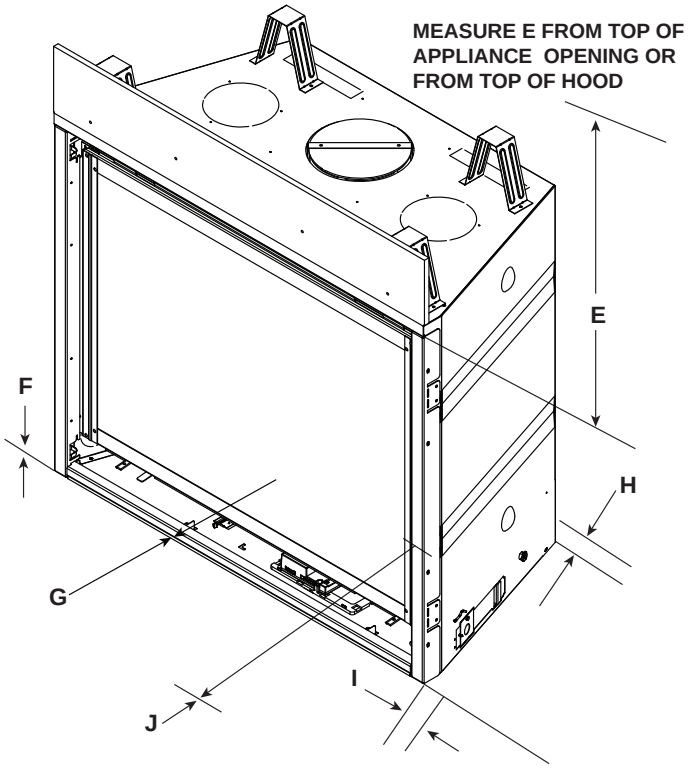

Note: E and K will change if passive heat is installed.

		* MINIMUM FRAMING DIMENSIONS							
		A	B	C	D	E	F	G**	H
		Rough Opening (Vent Pipe)	Rough Opening (Height)	Rough Opening (Depth)	Rough Opening (Width)	Clearance to Room Ceiling	Combustible Floor	Minimum Hearth Required	Behind Appliance
MER36MN	Inches	10	40-1/8	22	42	32	0	0	1/2
	Millimeters	254	1019	559	1067	813	0	0	13
MER42MN	Inches	10	42-1/8	22	49	32	0	0	1/2
	Millimeters	254	1070	559	1245	813	0	0	13

	* MINIMUM FRAMING DIMENSIONS		
		I	J
		Sides of Appliance	Front of Appliance
MER36MN	Inches	1/2	36
	Millimeters	13	914
MER42MN	Inches	1/2	36
	Millimeters	13	914

* Adjust framing dimensions for interior chase sheathing (such as sheetrock).
G** For installations with vinyl flooring, see Section 3.E.

Figure 3.10 Clearances to Combustibles

Framing Dimensions- Passive Heat Front Discharge (PH-MR)

Front Discharge: Air conveyed into the room through one front discharge slot.

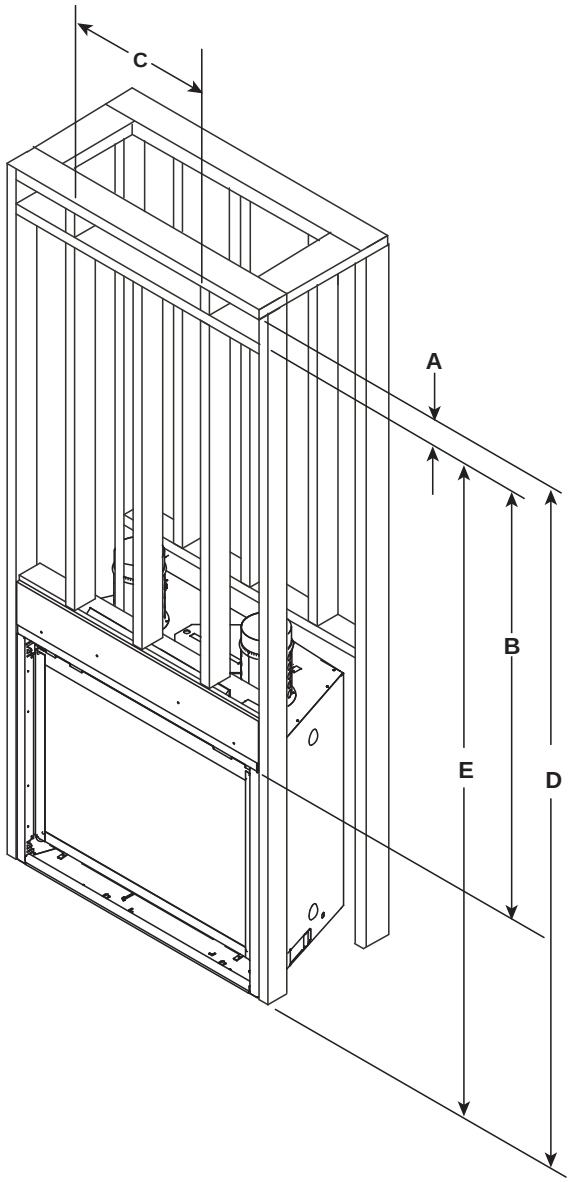

CHASE DETAIL

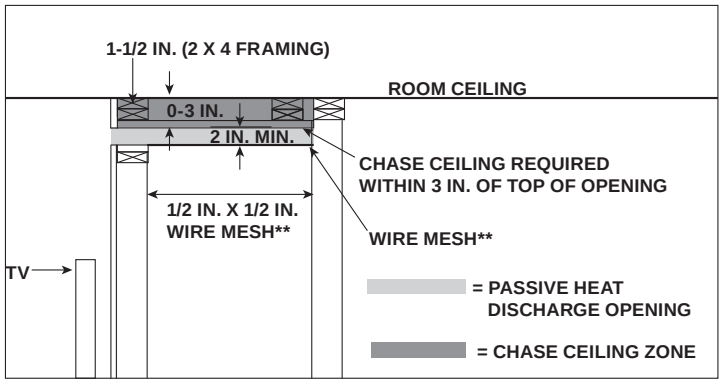

WARNING! Risk of Fire! *Wire mesh required on bottom of discharge opening (Dimension A) when finished discharge opening is greater than 3 inches. Secure mesh to top of framing.*

FRONT DISCHARGE MINIMUM FRAMING DIMENSIONS							
		A		B	C	D	E
		TRIM KIT* INSTALLED	NO TRIM KIT**				
		Required Height of Discharge Opening	Height of Discharge Opening	Clearance to Discharge Opening	Width of Discharge Opening	Clearance to Top of Discharge Opening From Bottom of Appliance	Clearance to Bottom of Discharge Opening from Bottom of Appliance
MER36MN	Inches	3-1/2	2	41	36-1/2	76-1/2	74-1/2
	millimeters	89	51	1041	927	1943	1892
MER42MN	Inches	3-1/2	2	41	42-1/2	78-1/2	76-1/2
	millimeters	89	51	1041	1080	1994	1943

*** Measurement for Trim Kit = 3-1/2 in. + Additional Finishing Material Thickness.**

**** Measurement without Trim Kit = 2 in. + Additional Finishing Material Thickness. If finished discharge opening height is greater than 3 inches, wire mesh is required.**

Figure 3.11 Passive Heat Front Discharge Framing Dimensions With and Without a Trim Kit

Framing Dimensions - Passive Heat Side Discharge (PH-MR)

Side Discharge: Air conveyed into the room through two discharge registers, one on each side of appliance.

***WARNING! Risk of Fire! DO NOT** place combustible objects or combustible materials in non-combustible zone. Appliance and combustible materials will overheat.*

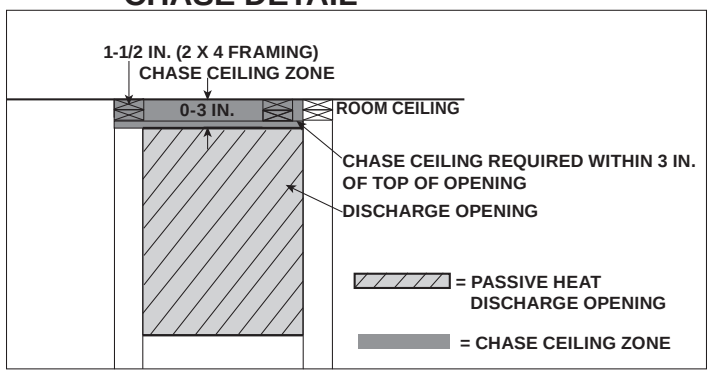

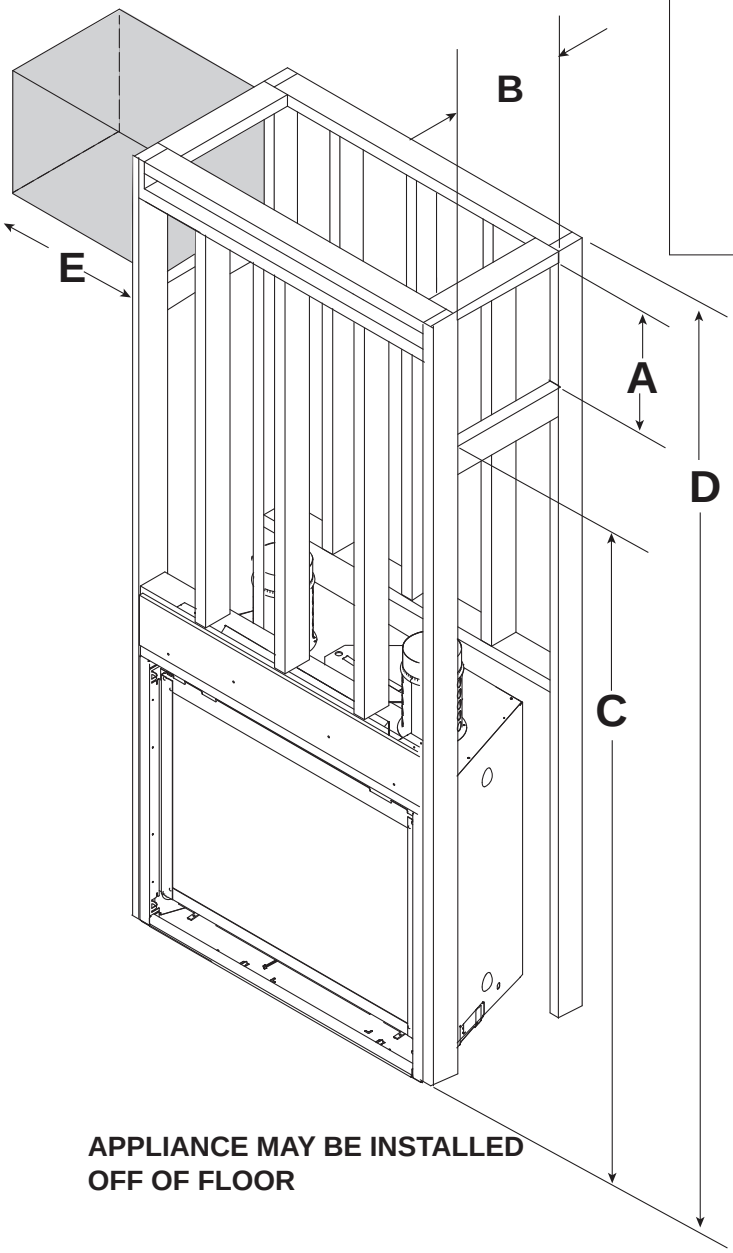

SIDE DISCHARGE FRAMING DIMENSIONS						
		A	B	C	D	E
		Height of Discharge Opening	Width of Discharge Opening	Minimum Clearance to Discharge Opening From Bottom of Appliance	Minimum Clearance to Ceiling from Bottom of Appliance	Minimum Clearance to Combustible Materials
MER36MN MER42MN	Inches	12-1/4	8-3/4	68-1/4	83-1/2	18
	millimeters	311	222	1734	2121	457

Figure 3.12 Passive Heat Side Discharge Framing Dimensions

Framing Dimensions - Passive Heat Open Top Discharge (PH-MR)

Open Top Discharge: Both sides and the top are open allowing air to be conveyed into the room.

WARNING! Risk of Fire! *Mesh screen required on bottom of discharge opening when discharge opening is greater than 3 inches. Secure mesh to top of framing.*

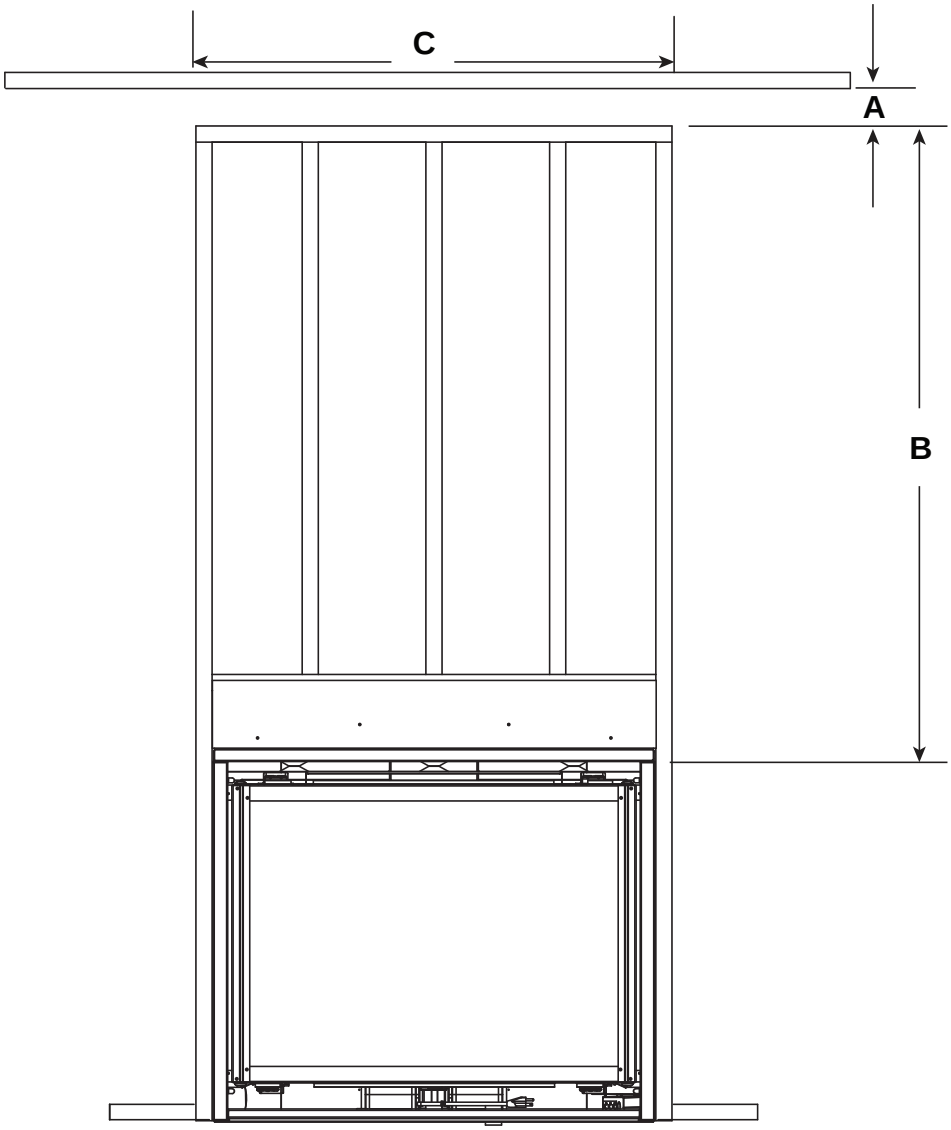

OPEN TOP DISCHARGE MINIMUM FRAMING DIMENSIONS				
		A*	B	C
		Height of Discharge Opening	Clearance to Discharge Opening	Width of Discharge Opening
MER36MN	Inches	2	41	36-1/2
	millimeters	51	1041	927
MER42MN	Inches	2	41	42-1/2
	millimeters	51	1041	1080

* Mesh screen required for front discharge or open top discharge passive heat installations with discharge opening of 3 inches or greater.

Figure 3.13 Passive Heat Minimum Framing Dimensions Open Top Discharge

D. Constructing the Appliance Chase

NOTICE: *Install appliance on hard metal or wood surfaces extending full width and depth.* ***DO NOT*** *install directly on carpeting, vinyl, or any combustible material other than wood.*

WARNING! Risk of Fire! *Maintain specified air space clearances to appliance and vent pipe:*

- *Insulation and other materials must be secured to prevent accidental contact.*
- *The chase must be properly blocked to prevent blown insulation or other combustibles from entering and making contact with fireplace or chimney.*
- *Failure to maintain airspace may cause overheating and a fire.*

A chase is a vertical box-like structure built to enclose the gas appliance and/or its vent system. In cooler climates the vent should be enclosed inside the chase.

NOTICE: *Treatment of ceiling firestops and wall shield firestops and construction of the chase may vary with the type of building. These instructions are not substitutes for the requirements of local building codes. Therefore, you MUST check local building codes to determine the requirements to these steps.*

NOTICE: Where required by code, install only sprinkler heads with a sprinkler activation temperature classified as Extra High.

- *Sprinklers inside of chase: Keep sprinkler head away from vent and chimney.*
- *Heat Management applications: Maintain 36 inches of clearance to openings from which heat is discharged such as convection slots, passive heat registers, heat zone registers, etc. Refer to Section 6.B for Heat Management options allowed for this appliance.*

Chases should be constructed and insulated in the same manner as the thermal envelope of the home based on the code requirements for that climate zone to prevent air leakage and draft problems. The chase is an extension of the building thermal envelope.

To further prevent drafts and air leakage, the wall shield and ceiling firestops should be sealed with caulk with a minimum of 300 ºF continuous exposure rating to seal gaps. Gas line holes and other openings should be sealed with caulk with a minimum of 300 ºF continuous exposure rating or stuffed with unfaced insulation. If the appliance is being installed on a cement surface, a layer of plywood may be placed underneath to prevent conducting cold up into the room.

Minimum height requirements for an exterior chase on a top-vented appliance are shown in Figure 3.14. Reference Figure 4.5 for additional clearances.

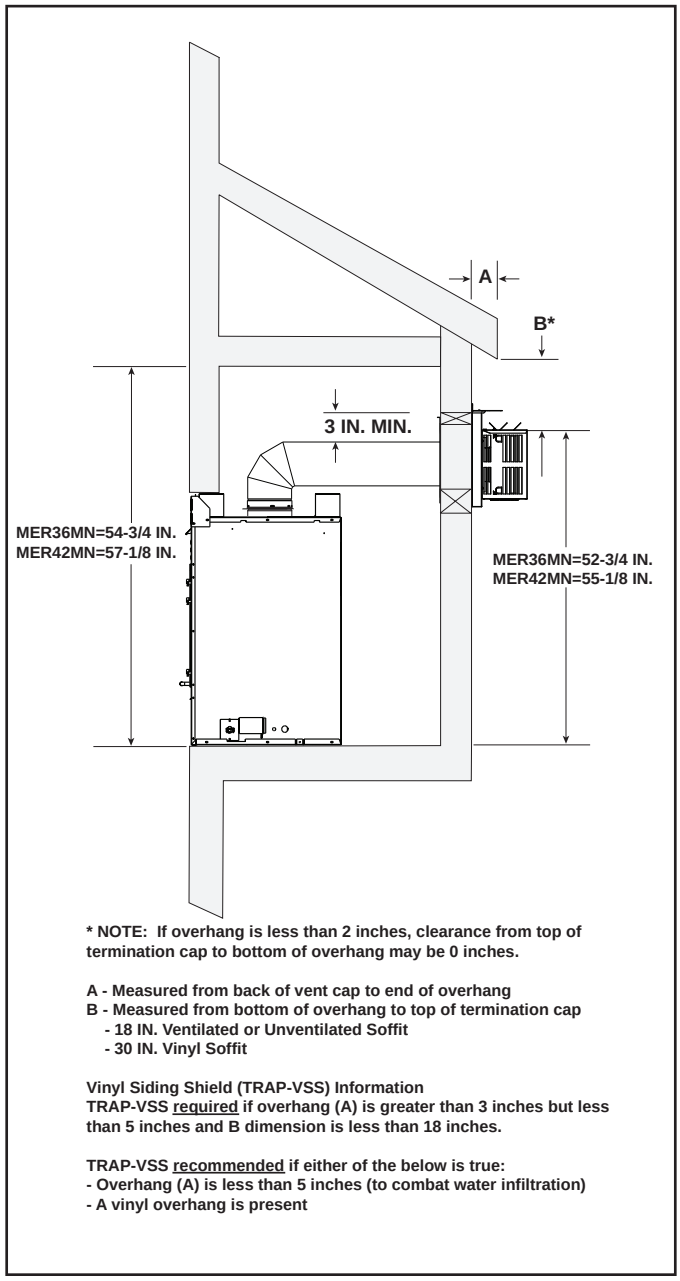

Figure 3.14 Exterior Chase - Minimum Height Requirements

E. Floor Protection

Vinyl Flooring

Vinyl flooring is sensitive to heat. To avoid damage to the vinyl flooring, a 12 inch minimum x 12 inch minimum hearth is recommended when using vinyl flooring up to the wall. See Figure 3.15. If no hearth is used, it is recommended to provide a minimum of 30 inches of clearance in front of the appliance to the vinyl flooring OR the bottom of the appliance should be raised a minimum of 24 inches off of the floor to allow the vinyl flooring to be installed up to the wall.

NOTICE: *Clearances that do not meet the minimum guidelines could result in damage or buckling to the vinyl flooring and is done at the installer's or homeowner's risk.*

Hearth and Home Technologies does not recommend adhesive based vinyl flooring products due to thermal expansion during operation. Floating style flooring can be used, but will reach temperatures up to 110 °F (based on ambient temperature of 70 °F). Consult the manufacturer's flooring specifications to ensure compatibility.

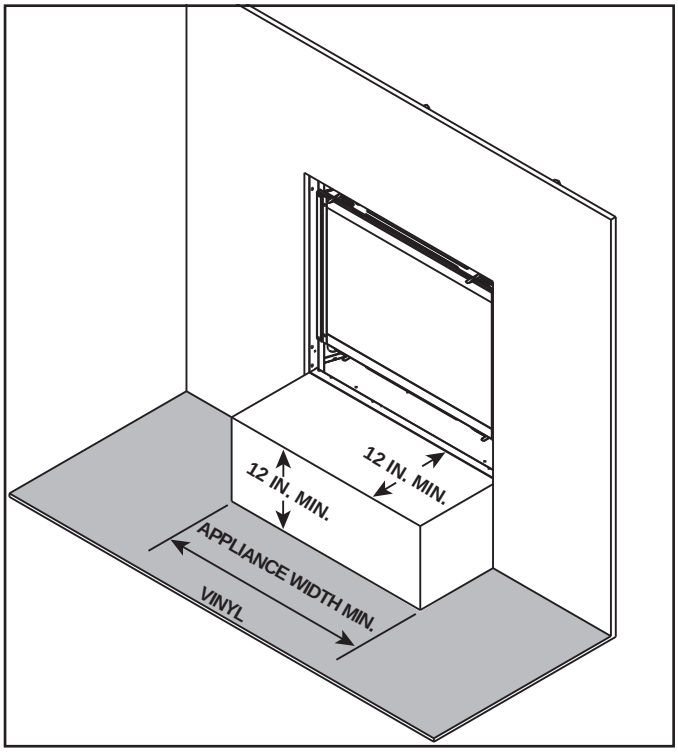

Figure 3.15 Vinyl Flooring Recommendations

- Combustible flooring may be located in front of the appliance. There are exceptions in regards to vinyl and/or adhesive flooring for these models as noted in Figure 3.15.

WARNING! Risk of Overheating! DO NOT *install combustible or non-combustible flooring or hearth material above top of bottom surround. Air flow must be maintained.*

- Flooring and hearth material is allowed up to, but not above, the top of the bottom surround in order to allow for proper air flow from appliance. See Figure 3.16.
- The base of the fireplace may sit on a combustible surface.

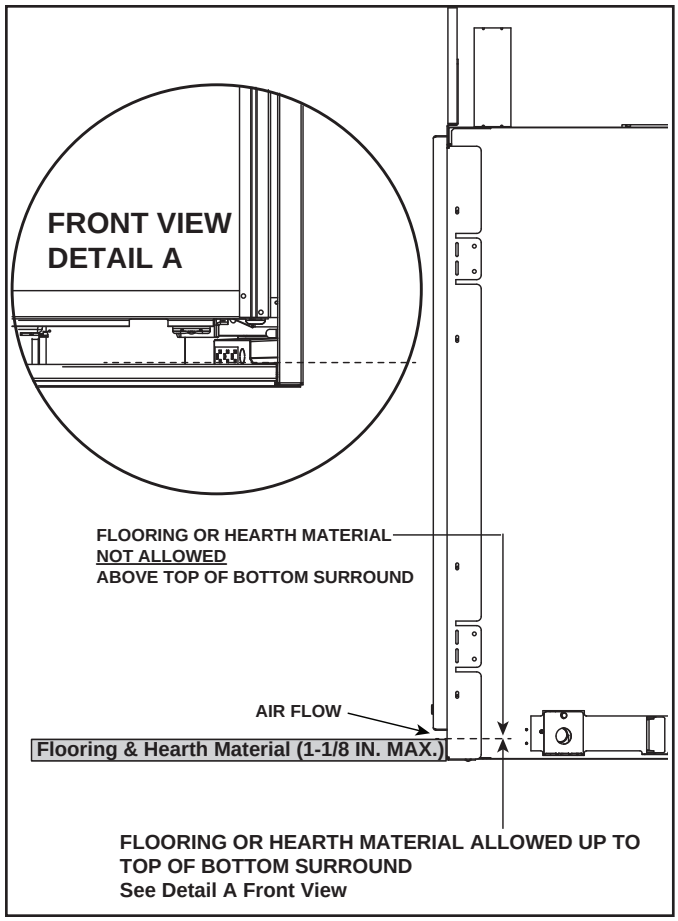

Figure 3.16 Flooring & Hearth Material Allowed

4 Termination Location and Vent Information

A. Approved Pipe

WARNING! Risk of Fire, Delayed Ignition or Asphyxiation. *This appliance requires a separate vent.* ***DO NOT*** *vent to a pipe serving any other appliance.*

This appliance is only approved for use with Hearth & Home Technologies DVP or SLP venting systems. Refer to Vent Components document included in manual bag for vent component information and dimensions. Only use listed decorative termination caps/shrouds with Hearth & Home Technologies approved venting systems.

DO NOT mix pipe, fittings or joining methods from different manufacturers.

The pipe is tested to be run inside an enclosed wall. There is no requirement for inspection openings at each joint within the wall.

B. Vent Termination Minimum Clearances

⚠ WARNING

Fire Risk.

Maintain vent clearance to combustibles as specified.

- **DO NOT** pack air space with insulation or other materials.

Failure to keep insulation or other materials away from vent pipe could cause overheating and fire.

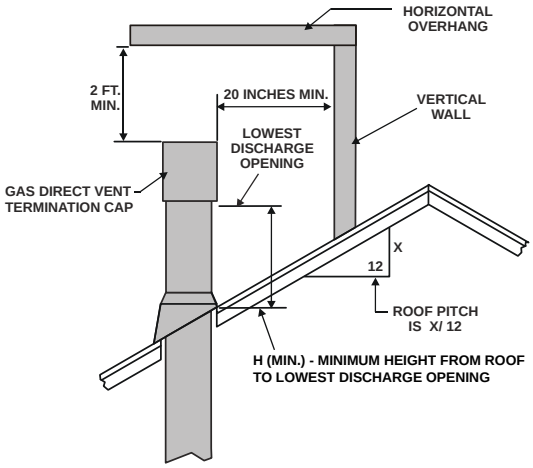

Roof Pitch	H (Min.) Ft
Flat to 6/12	1.0*
Over 6/12 to 7/12	1.25*
Over 7/12 to 8/12	1.5*
Over 8/12 to 9/12	2.0*
Over 9/12 to 10/12	2.5*
Over 10/12 to 11/12	3.25
Over 11/12 to 12/12	4.0
Over 12/12 to 14/12	5.0
Over 14/12 to 16/12	6.0
Over 16/12 to 18/12	7.0
Over 18/12 to 20/12	7.5
Over 20/12 to 21/12	8.0

* H minimum may vary depending on regional snowfall. Refer to local codes.

Figure 4.1 Minimum Height From Roof to Lowest Discharge Opening

A	B
6 in. (minimum) up to 20 in. *152 mm/508 mm*	18 in. minimum *457 mm*
20 in. and over	0 in. minimum

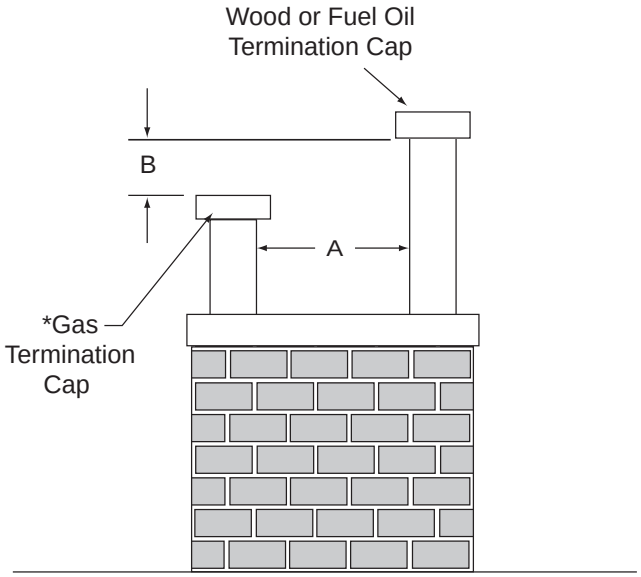

* If two gas terminations are present, they may be level (B = 0 inches) provided A is a minimum of 6 inches.

Figure 4.2 Staggered Termination Caps

CAUTION! Risk of Burns! *Termination caps are HOT, consider proximity to doors, traffic areas or where people may pass or gather (sidewalk, deck, patio, etc.). Listed cap shields available. Contact your dealer.*

- Local codes or regulations may require different clearances.
- Hearth & Home Technologies assumes no responsibility for the improper performance of the appliance when the venting system does not meet these requirements.
- Vinyl protection kits are suggested for use with vinyl siding.
- Measure horizontal and vertical termination cap clearances as noted in Figure 4.3 and 4.4.

B. Vent Termination Minimum Clearances (continued)

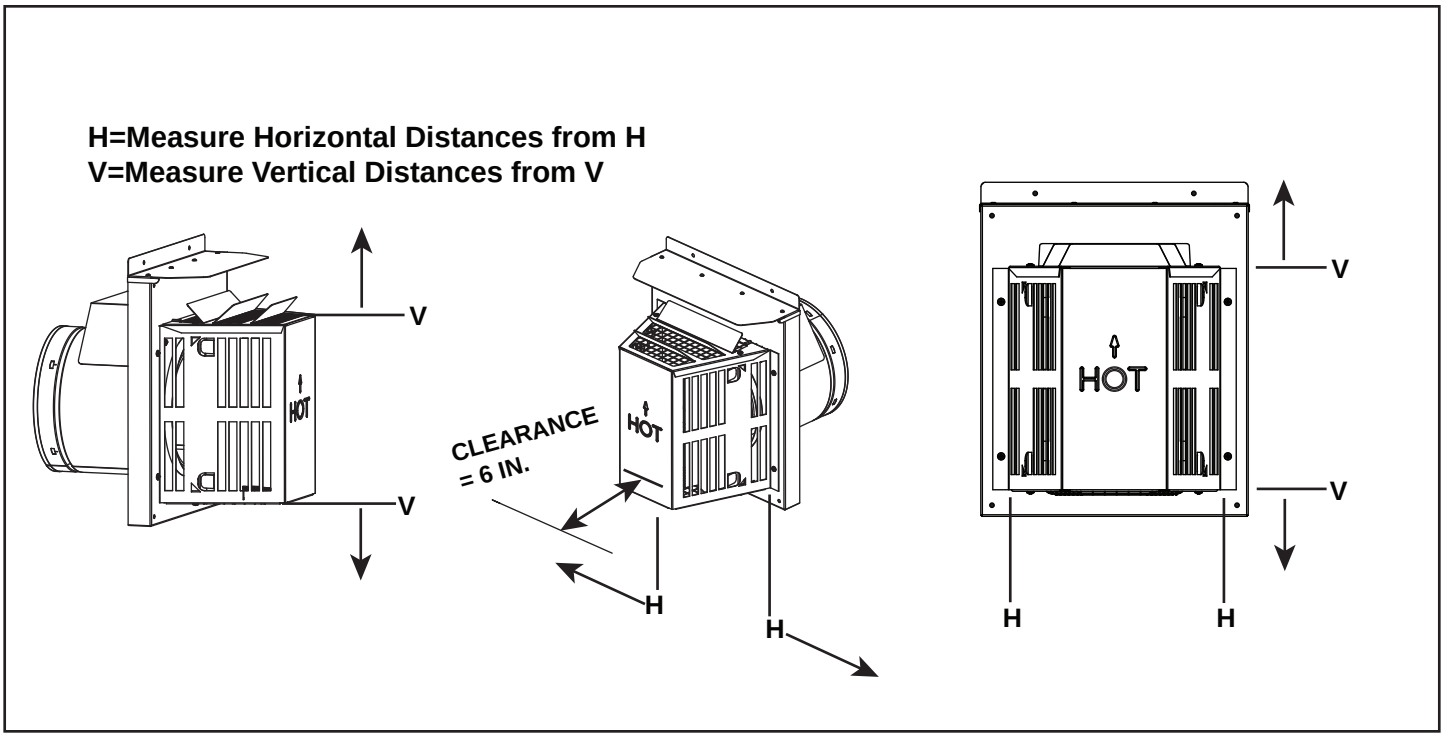

Figure 4.3

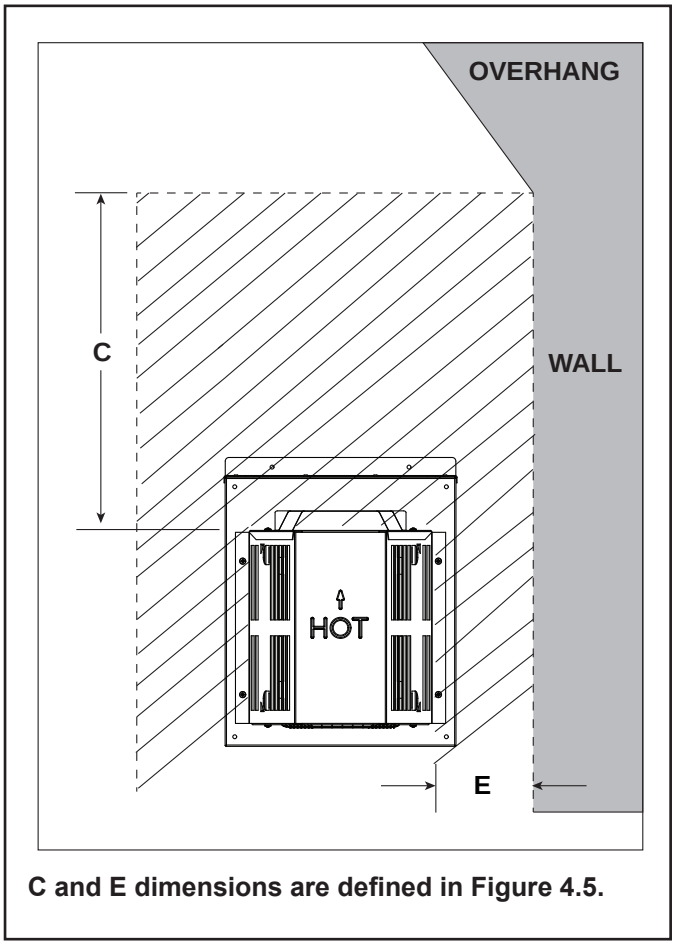

Figure 4.4 Measure Horizontal and Vertical Termination Clearance to Trapezoid Portion of Cap

C. Vent Terminal Clearances

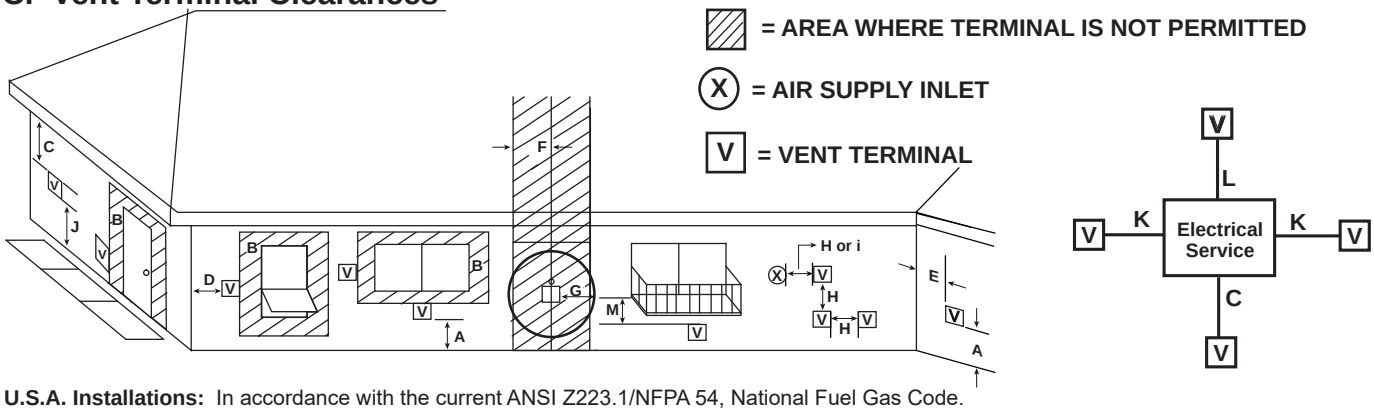

U.S.A. Installations: In accordance with the current ANSI Z223.1/NFPA 54, National Fuel Gas Code.
Canadian Installations: In accordance with the current CSA B149.1, Natural Gas and Propane Installation Code.

			U.S.A.	CANADA
A	Clearance above grade,veranda, porch, deck, balcony or roof.		12 in. (305 mm)	12 in. (305 mm)
B	Clearance to window or door that may be opened, or to permanently closed window		9 in. min. (229 mm min.)	12 in. min. (305 mm min.)
C	clearance below unventilated soffit	With TRAP-VSS: 14 in. (356 mm)	18 in. (457 mm)	18 in. (457 mm)
	clearance below ventilated soffit	With TRAP-VSS: 14 in. (356 mm)	18 in. (457 mm)	18 in. (457 mm)
	clearance below any vinyl soffits and electrical service	With TRAP-VSS: 26 in. (660 mm)	30 in. (762 mm)	30 in. (762 mm)
D	clearance to outside corner		6 in. (152 mm)	6 in. (152 mm)
E	clearance to inside corner		6 in. (152 mm)	6 in. (152 mm)
F	clearance to each side of center line extended above gas meter/regulator assembly		Clearance in accordance with local installation codes and the requirements of the gas supplier.	3 ft (914 mm) within a height 15 ft (4.5 m) above the meter/regulator assembly
G	clearance to gas service regulator vent outlet		3 ft (914 mm)	3 ft (914 mm)
H	clearance to non-mechanical air supply inlet to building or the combustion air inlet to any other appliance termination (mechanical or non-mechanical)		9 in. min. (229 mm min.)	12 in. min. (305 mm min.)
I	clearance to a mechanical (powered) air supply inlet ***(All mechanical air intakes within 10 feet of a horizontal termination cap must be a minimum of 3 feet below termination.)		3 ft (914 mm)***	6 ft (1.8 m)
J	On **public** property: clearance above paved sidewalk or a paved driveway.		7 ft (2.1 m)	7 ft (2.1 m)**
	**(A vent shall not terminate directly above a sidewalk or paved driveway which is located between two single family dwellings and serves both dwellings.)			
K	clearance from sides of electrical service		6 in. (152 mm)	6 in. (152 mm)
	Location of the vent termination must not interfere with access to the electrical service.			
L	clearance above electrical service		12 in. (305 mm)	12 in. (305 mm)
	Location of the vent termination must not interfere with access to the electrical service.			
M	clearance under veranda, porch, deck, balcony or overhang *(Permitted only if veranda, porch, deck, or balcony is fully open on a minimum of two sides beneath the floor.)	With TRAP-VSS: 14 in. (356 mm)	18 in. (457 mm)	18 in.* (457 mm)*
	vinyl or composite overhang		42 in. (1067 mm)	42 in. (1067 mm)

Figure 4.5 Minimum Clearances for Termination

D. Use of Elbows

Diagonal runs have both vertical and horizontal vent aspects when calculating the effects. Use the rise for the vertical aspect and the run for the horizontal aspect. See Figure 4.6.

Two 45º elbows may be used in place of one 90º elbow. On 45º runs, one foot of diagonal is equal to 8-1/2 inch (216 mm) horizontal run and 8-1/2 inch (216 mm) vertical run. A length of straight pipe is allowed between two 45º elbows. See Figure 4.6.

Figure 4.7 shows the vertical and horizontal offsets for DVP or SLP elbows.

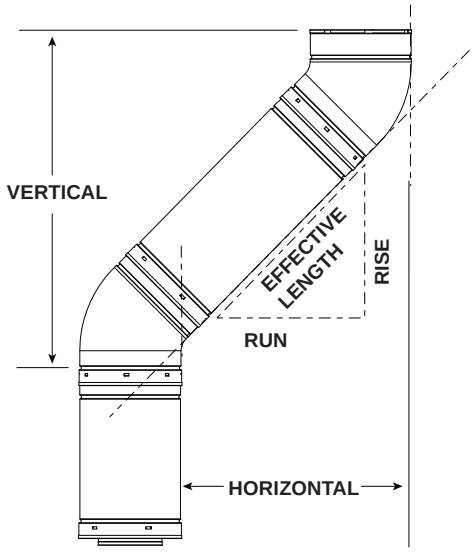

SLP Pipe	Effective Length		Rise/Run	
	Inches	Millimeters	Inches	Millimeters
SLP4	4	102	2-3/4	70
SLP6	6	152	4-1/4	108
SLP12	12	305	8-1/2	216
SLP24	24	610	17	432
SLP36	36	914	25-1/2	648
SLP48	48	1219	34	864
SLP6A	3 to 6	76 to 152	2-1/8-4-1/4	54-108
SLP12A	3 to 12	76 to 305	2-1/8-8-1/2	54-216

DVP Pipe	Effective Length		Rise/Run	
	Inches	Millimeters	Inches	Millimeters
DVP4	4	102	2-3/4	70
DVP6	6	152	4-1/4	108
DVP12	12	305	8-1/2	216
DVP24	24	610	17	432
DVP36	36	914	25-1/2	648
DVP48	48	1219	34	864
DVP6A	3 to 6	76 to 152	2-1/8-4-1/4	54-108
DVP12A	3 to 12	76 to 305	2-1/8-8-1/2	54-216

Figure 4.6

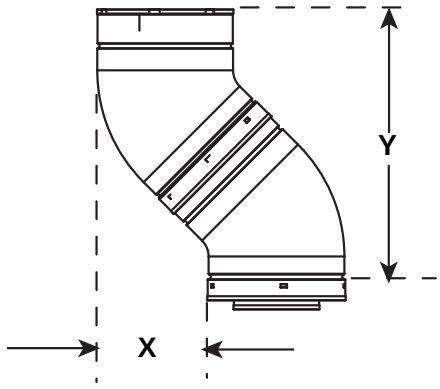

Vent Type	X		Y	
	Inches	Millimeters	Inches	Millimeters
DVP	6-5/8	168	16-1/2	419
SLP	5-1/4	133	11-3/8	289

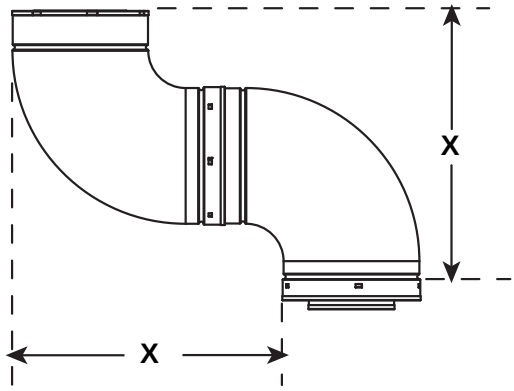

Vent Type	X	
	Inches	Millimeters
DVP	16-1/4	413
SLP	11-1/4	286

Figure 4.7 Vertical and Horizontal Offset for DVP and SLP Elbows

E. Vent Diagrams

General Rules:

- When penetrating a combustible wall, a wall shield firestop must be installed.
- When penetrating a combustible ceiling, a ceiling firestop must be installed.
- Horizontal runs of vent do not require vertical rise; horizontal runs may be level.
- It is recommended that the horizontal termination cap have a 1/4 inch downward slant to allow any moisture in cap to be released. See Figure 4.8.

If venting configuration differs from the vent diagrams on the following pages (Figure 4.11-4.18), these rules also apply:

- SUBTRACT 3 ft from the total H measurement for each 90º elbow installed horizontally.
- SUBTRACT 1-1/2 ft from the total H measurement for each 45º elbow installed horizontally.
- A maximum of three 90º elbows (or six 45º elbows) may be used in any vent configuration. Some elbows may be installed horizontally. See Figure 4.18.
- Elbows may be placed back to back anywhere in the system.
- Any 90º elbow may be replaced with two back to back 45º elbows.
- 2 x 45° elbow jog directly off the top of the fireplace is allowed but has no V or H value, is permitted when reducing to SLP pipe, and DOES NOT count towards total elbow count.

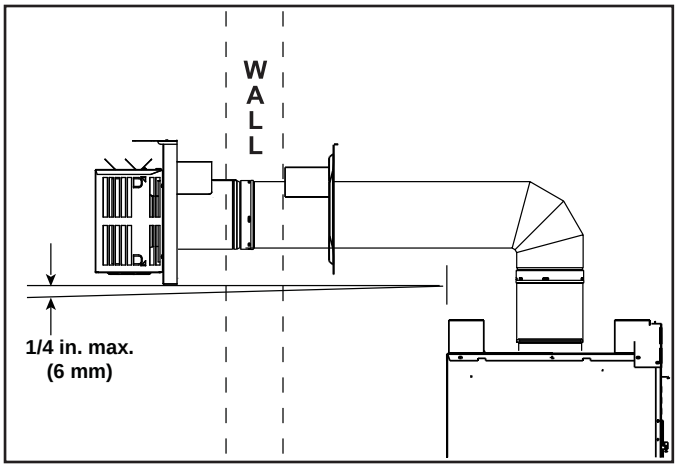

Figure 4.8

⚠ WARNING

Fire Risk. Explosion Risk.

Do NOT pack insulation or other combustibles between ceiling firestops.

- ALWAYS maintain specified clearances around venting and firestop systems.
- Install wall shield and ceiling firestops as specified.

Failure to keep insulation or other material away from vent pipe may cause fire.

⚠ WARNING

Fire Risk.

- When using DVP-HRC-SS and DVP-HRC-ZC-SS termination caps on top vented fireplaces, a 6 inch minimum vertical vent section is required before installing first elbow.

Note: The MER36MN / MER42MN models can adapt to SLP series vent pipe, if desired.

A DVP-2SL adapter and a minimum 48 inch vertical section of SLP series vent pipe must be used.

A DVP-SLP24 adapter may also be used with a 24 inch vertical section of SLP series vent pipe.

After the 48 inch vertical section, the venting table rules must be followed. The first 48 inch **vertical** section is NOT counted as part of the vertical components in the table. It is still counted as part of the overall maximum run. All venting table rules for the vent run must still be followed.

MER36MN
Example: DVP pipe 1 ft. min. vertical = 5 ft. max. horizontal
SLP pipe 5 ft. min. vertical = 5 ft. max. horizontal

MER42MN
Example: DVP pipe 1 ft. min. vertical = 3 ft. max. horizontal
SLP pipe 5 ft. min. vertical = 3 ft. max. horizontal

Measuring Standards:

Vertical and horizontal measurements listed in the vent diagrams and clearances for termination were made using the following standards:

- Pipe measurements are shown using the effective length of pipe. See Vent Components document, included in manual bag assembly, for information on effective length of pipe components.
- Horizontal terminations are measured to the outside mounting surface (flange of termination cap). See Figure 4.9.
- Vertical terminations are measured to top of last section of pipe. See Figure 4.10.
- Horizontal pipe installed level with no rise.

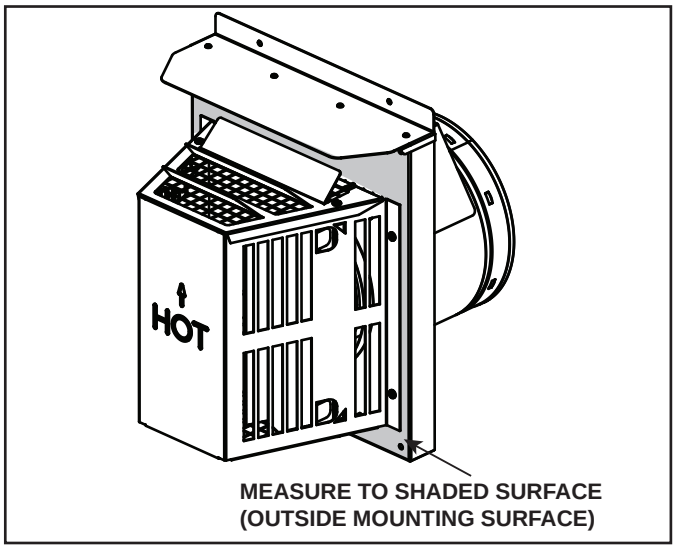

Figure 4.9 Measure to Outside Mounting Surface

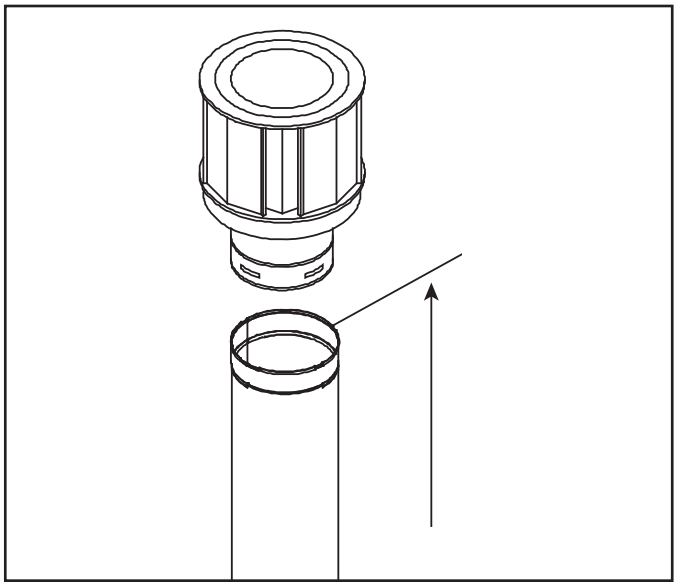

Figure 4.10 Measure to Top of Last Section of Pipe

Top Vent - Horizontal Termination

One Elbow

MER36MN			
V_1 Minimum		H_1 Maximum	
Elbow Only		Not Allowed	
6 in.	152 mm	3 ft.	914 mm
1 ft.	305 mm	5 ft.	1.5 m
1-1/2 ft.	457 mm	10 ft.	3.0 m
2 ft.	610 mm	15 ft.	4.6 m
2-1/2 ft.	762 mm	18 ft.	5.5 m
3 ft.	914 mm	20 ft.	6.1 m
$V_1 + H_1$ = 40 ft. (12.2 m) Maximum H_1 = 20 ft. (6.1 m) Maximum			

MER42MN			
V_1 Minimum		H_1 Maximum	
Elbow Only		Not Allowed	
6 in.	152 mm	2 ft.	610 mm
1 ft.	305 mm	3 ft.	914 mm
2 ft.	610 mm	6 ft.	1.8 m
3 ft.	914 mm	11 ft.	3.4 m
4 ft.	1.2 m	20 ft.	6.1 m
$V_1 + H_1$ = 40 ft. (12.2 m) Maximum H_1 = 20 ft. (6.1 m) Maximum			

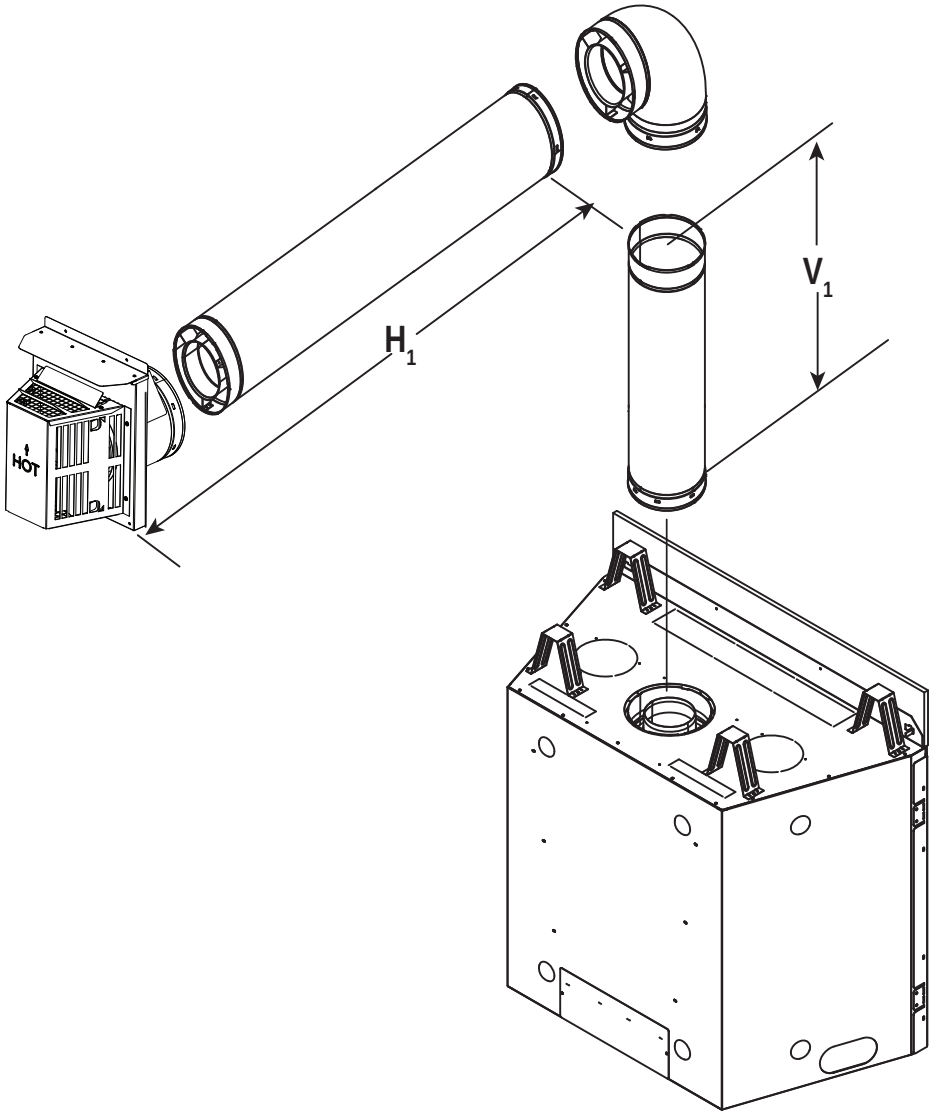

Figure 4.11

Two Elbows

MER36MN			
V_1 Minimum		$H_1 + H_2$ Maximum	
Elbow only		Not Allowed	
6 in.	152 mm	Not Allowed	
1 ft.	305 mm	4 ft.	1.2 m
1-1/2 ft.	457 mm	11 ft.	3.4 m
2 ft.	610 mm	17 ft.	5.2 m
2-1/2 ft.	762 mm	20 ft.	6.1 m
$V_1 + H_1 + H_2$ = 40 ft. (12.2 m) Maximum $H_1 + H_2$ = 20 ft. (6.1 m) Maximum V_1 = 1 ft. (305 mm) Minimum			

MER42MN			
V_1 Minimum		$H_1 + H_2$ Maximum	
Elbow only		Not Allowed	
6 in.	152 mm	Not Allowed	
1 ft.	305 mm	2 ft.	610 mm
2 ft.	610 mm	4 ft.	1.2 m
3 ft.	914 mm	6 ft.	1.8 m
4 ft.	1.2 m	8 ft.	2.4 m
6 ft.	1.8 m	12 ft.	3.6 m
10 ft.	3.0 m	20 ft.	6.1 m
$V_1 + H_1 + H_2$ = 40 ft. (12.2 m) Maximum $H_1 + H_2$ = 20 ft. (6.0 m) Maximum V_1 = 1 ft. (305 mm) Minimum			

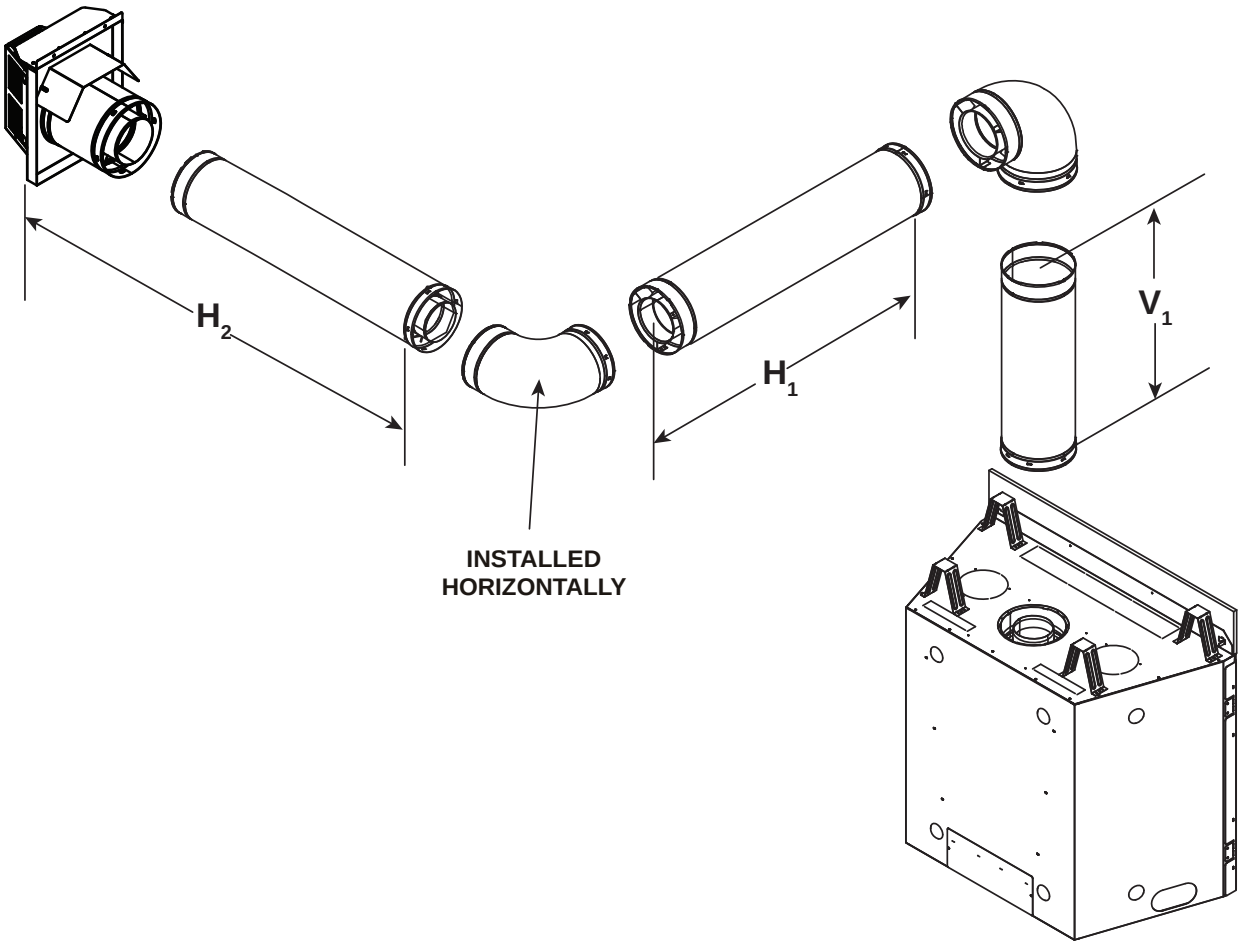

Figure 4.12

Three Elbows

V_1 Min.		H_1 Max.		V_2 Min.		H_2 Max.	
6 in.	152 mm	3 ft	914 mm	6 in.	152 mm	2 ft.	610 mm
1 ft.	305 mm	6 ft.	1.8 m	1 ft.	305 mm	6 ft.	1.8 m
2 ft.	610 mm	11 ft.*	3.4 m*	2 ft.	610 mm	10 ft.*	3.1 m*
3 ft.	914 mm	16 ft *	4.9 m*	3 ft.	914 mm	14 ft.*	4.3 m*
*$H_1 + H_2$ = 20 ft. (6.1 m) Maximum				$V_1 + V_2 + H_1 + H_2$ = 40 ft. (12.2 m) Maximum			

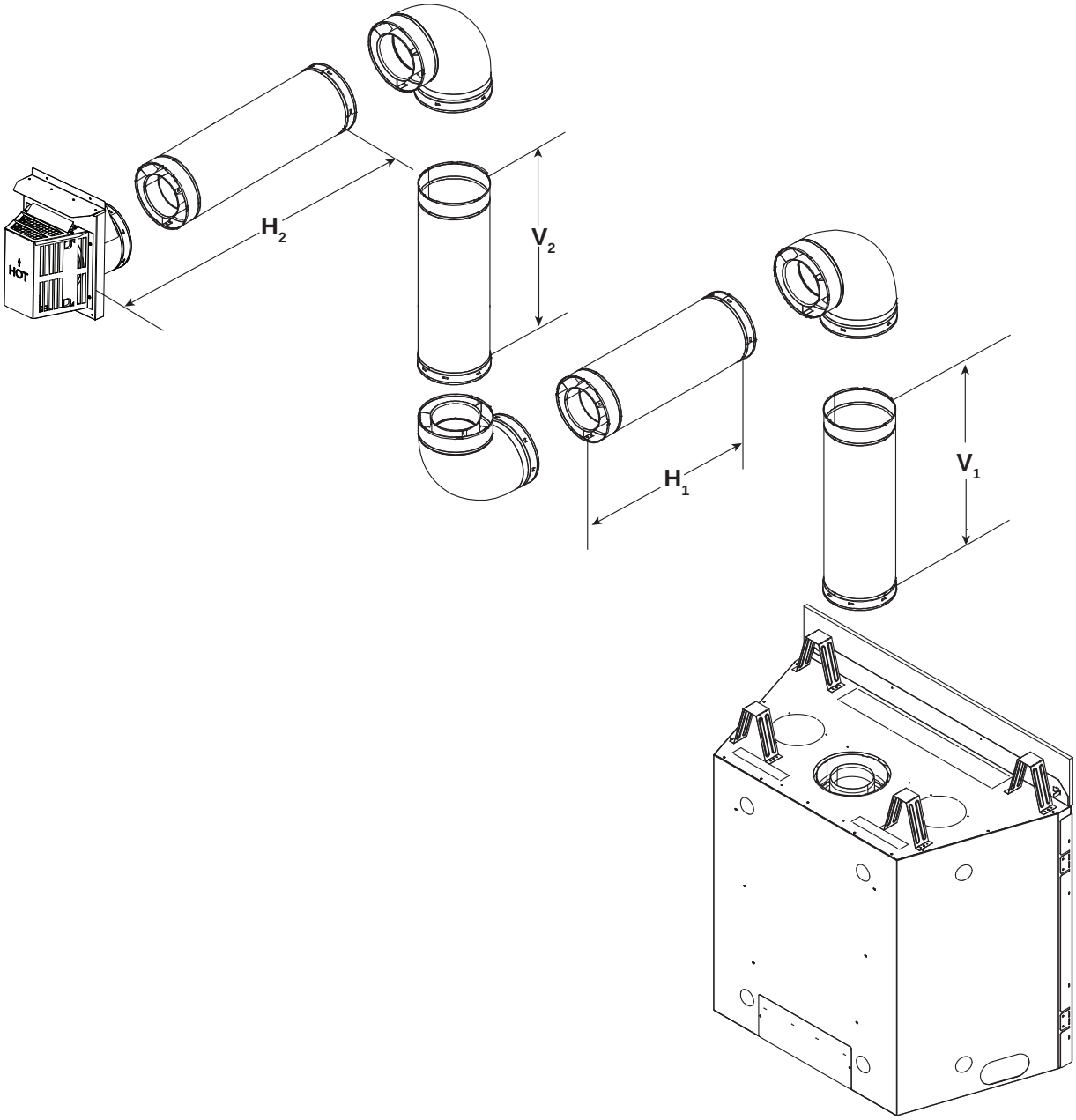

Figure 4.13

Top Vent - Vertical Termination

No Elbow

V_1 = 40 ft. Max. (12.4 m)
V_1 = 3 ft. Min. (914 mm)

Note: If installing a vertical vent/termination off the top of the appliance, the flue restrictor should be used.

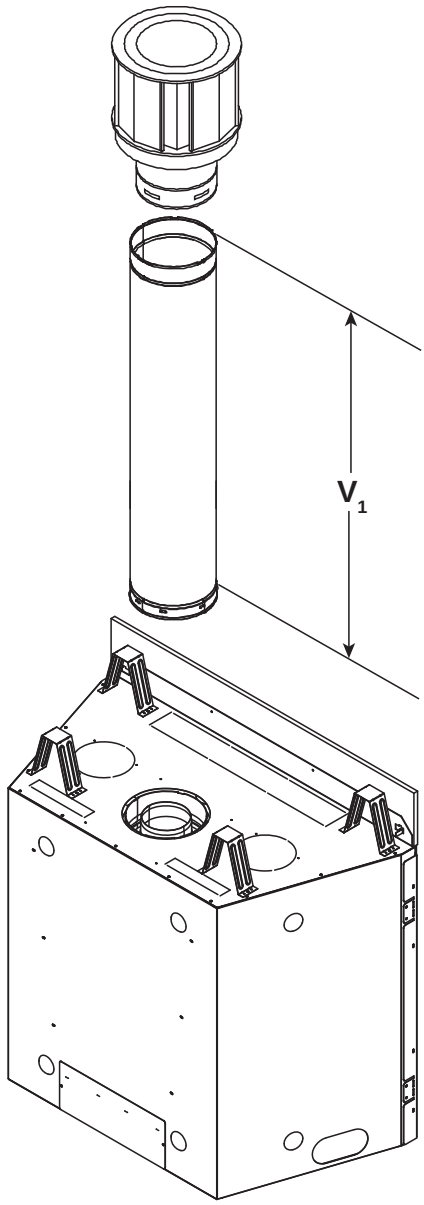

Figure 4.14

Top Vent - Vertical Termination (continued)

Flue Restrictor Instructions

1. Orientate and align the two pieces of the flue restrictor as shown in Figure 4.16.
2. Refer to Table 4.1 and Figure 4.16 to match the amount of vertical you have in the system and determine the appropriate position to set the flue restrictor.
3. Center the two flue restrictor pieces on the vent at the setting selected in step 2 and secure in place by using two self-tapping screws. See Figure 4.15.

Vertical	TOP VENT
	NG
4 ft.	1-1
8 ft.	2-2
15 ft.	2-2
20 ft.	3-2
25 ft.	3-2
30 ft.	3-3
35 ft.	3-4
40 ft.	3-4

Table 4.1

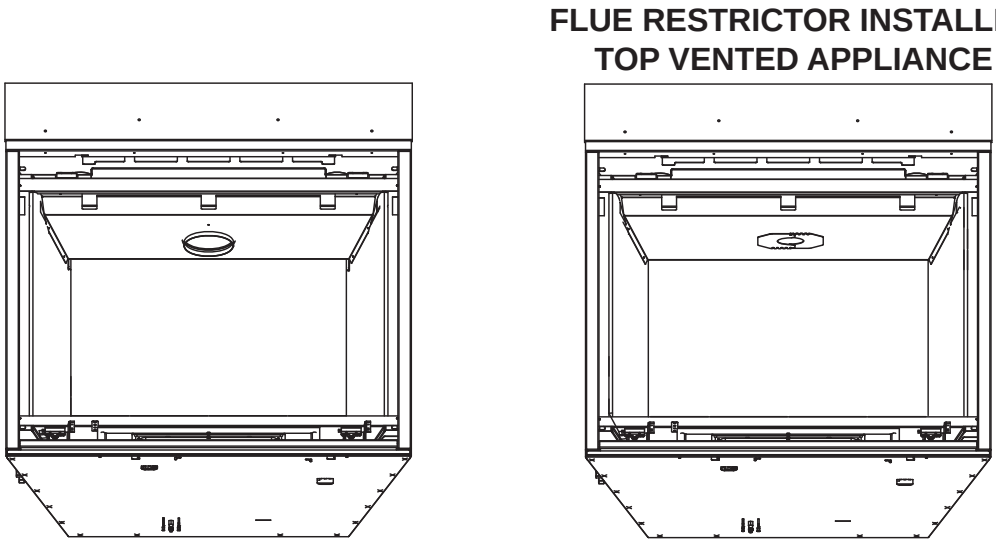

Figure 4.15

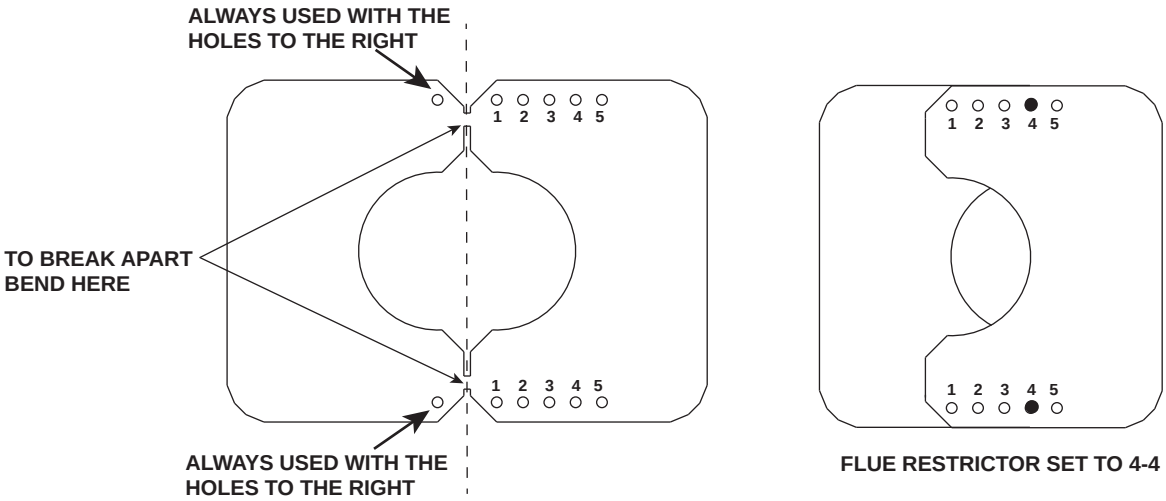

Note: If the DVP-2SL or DVP-SLP24 adapter is used with SLP pipe, you MUST subtract one number from Table 4.1.

Example: Top vent 40 ft vertical with DVP pipe = 3-4
Top vent 40 ft vertical with SLP pipe = 2-3

Figure 4.16 Setting the Flue Restrictor

Two Elbows

V_1		H_1 Maximum		V_2	$V_1 + V_2$ Min.	
Elbow only		2 ft.	610 mm	*	*	*
6 in.	152 mm	6 ft.	1.8 m	*	*	*
2 ft.	610 mm	11 ft.	3.4 m	*	*	*
3 ft.	914 mm	16 ft.	4.9 m	*	*	*
4 ft.	1.2 m	20 ft.	6.1 m	*	*	*
$V_1 + V_2 + H_1$ = 50 ft. (15.2 m) Maximum *No specific restrictions on this value EXCEPT $V_1 + V_2 + H_1$ cannot exceed 50 ft (15.2 m)						

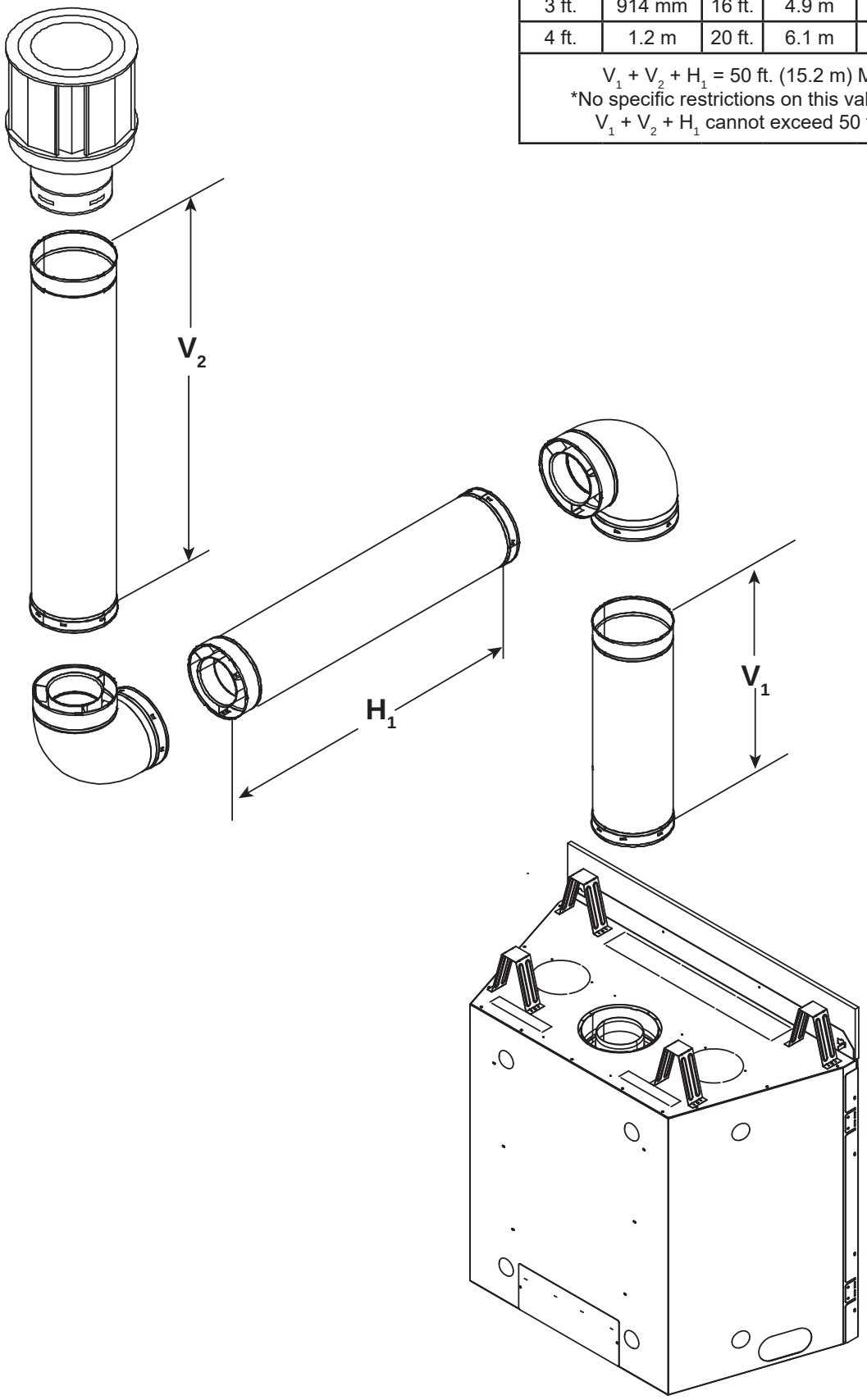

Figure 4.17

Top Vent - Vertical Termination - (continued)

Three Elbows

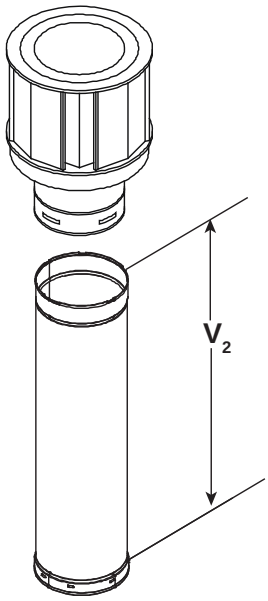

V_1		$H_1 + H_2$		V_2	$V_1 + V_2$ Minimum		$H_1 + H_2$ Maximum	
Elbow only		1 ft.	305 mm	*	*	*	1 ft.	305 mm
6 in.	152 mm	2 ft.	610 mm	*	*	*	2 ft.	610 mm
1 ft.	305 mm	2 ft.	610 mm	*	*	*	2 ft.	610 mm
2 ft.	610 mm	4 ft.	1.2 m	*	*	*	4 ft.	1.2 m
3 ft.	914 mm	9 ft.	2.7 m	*	*	*	9 ft.	2.7 m
4 ft.	1.2 m	18 ft.	5.5 m	*	*	*	18 ft.	5.5 m
$H_1 + H_2$ = 20 ft. (6.1 m) Maximum				$V_1 + V_2 + H_1 + H_2$ = 40 ft. (12.2 m) Maximum				

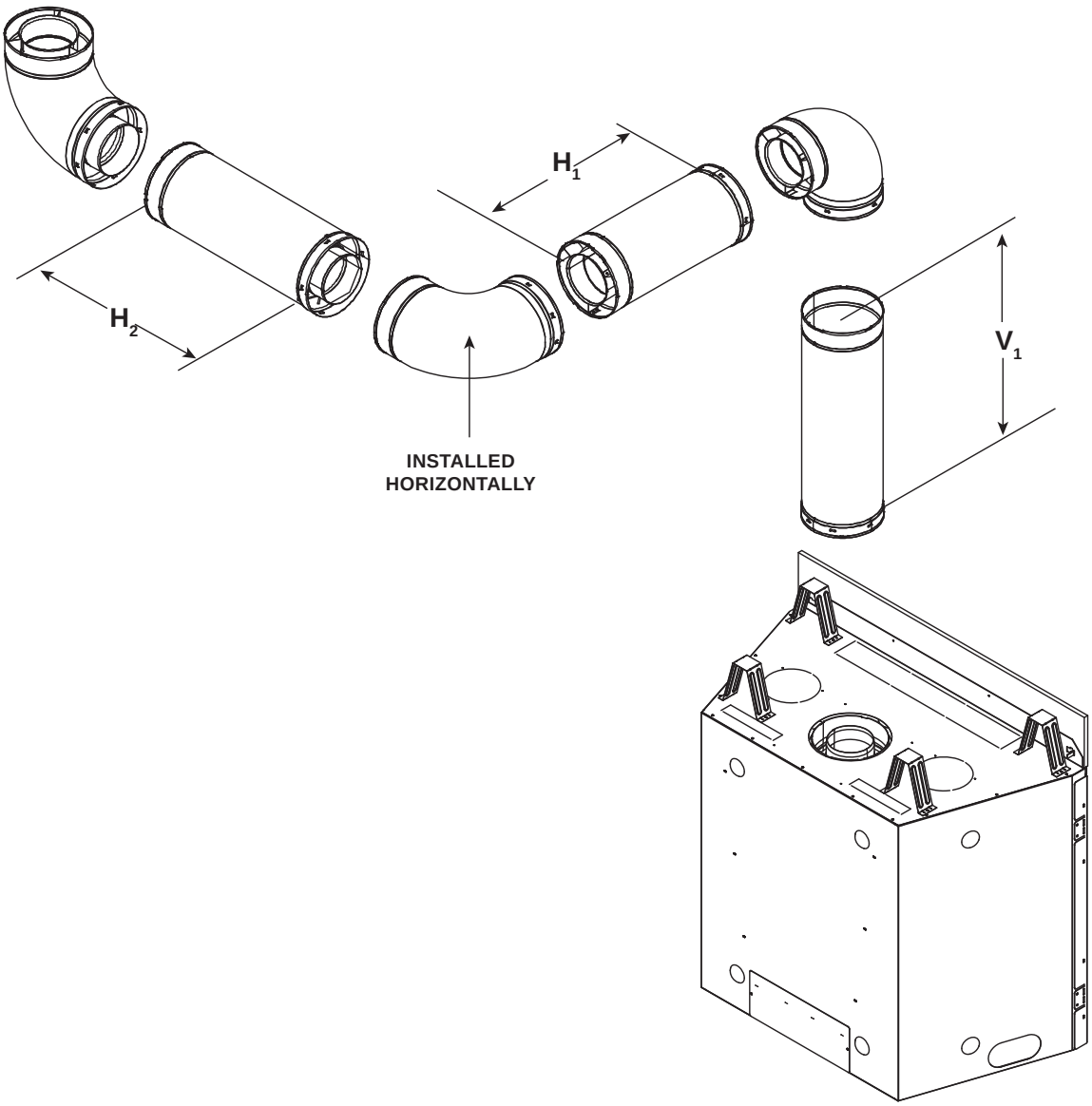

Figure 4.18

5 Vent Clearances and Framing

A. Vent Clearances to Combustibles

WARNING! Risk of Fire! *Maintain air space clearance to vent.* ***DO NOT*** *pack insulation or other combustibles:*

- *Between ceiling firestops*
- *Between wall shield firestops*
- *Around vent system*

Failure to keep insulation or other material away from vent pipe could cause overheating and fire.

Note: A minimum of three inches clearance from the top of the pipe to any combustible material must always be maintained.

Note: Heat shields MUST overlap by a minimum of 1-1/2 in. (38 mm).

- **DVP heat shield** - designed to be used on a wall 4 in. to 7-1/4 in. (102 mm to 184 mm) thick**.**
- If wall thickness is less than 4 in. the existing heat shields must be field trimmed. If wall thickness is greater than 7-1/4 in. a DVP-HSM-B will be required.
- **SLP heat shield** - designed to be used on a wall 4-3/8 in. to 7-5/8 in. (111 mm to 194 mm thick).
- If wall thickness is less than 4-3/8 the existing heat shields must be field trimmed. If wall thickness is greater than 7-5/8 in. a DVP-HSM-B will be required.

(DVP-SLP Pipe Shown)

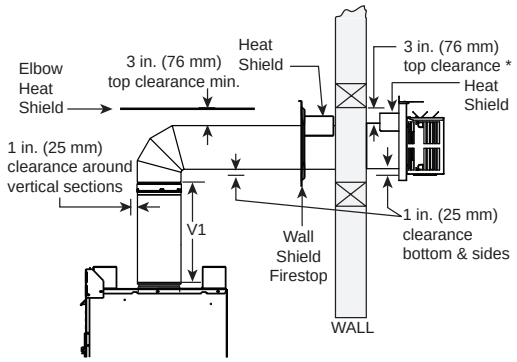

Warning! Risk of Fire: Elbow heat shield required with 3 inch top clearance or V1 of 2 ft. or less.

* When using SLP pipe, minimum clearances from the vent pipe to combustible materials at inside wall firestops are:
Top: 2-1/2 in. (64 mm)
Bottom: 1/2 in. (13 mm)
Sides: 1 in. (25 mm)

Figure 5.1 Horizontal Venting Clearances To Combustible Materials

Elbow and Offset Clearances to Combustibles

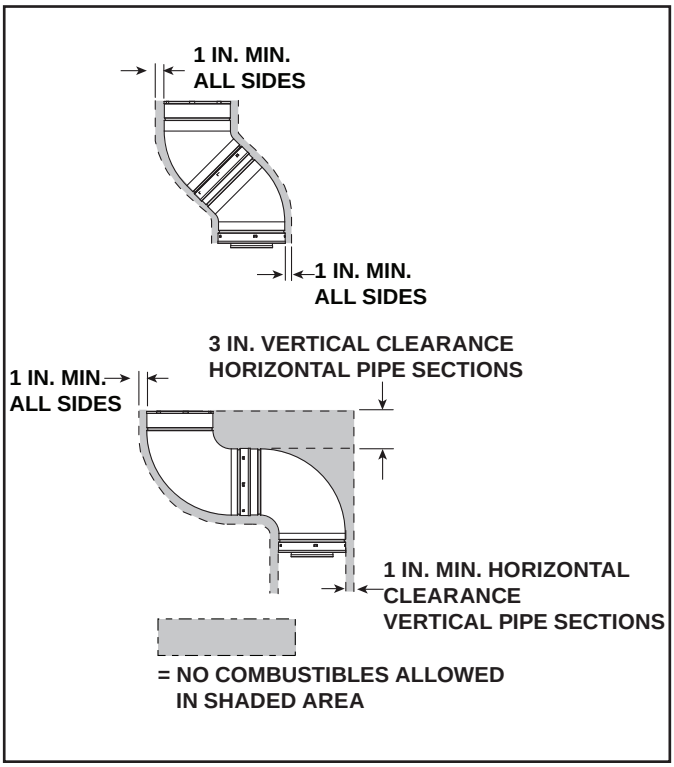

Figure 5.2 Clearances from Vent to Combustible Framing Materials

B. Wall Penetration Framing/Firestops

Combustible Wall Penetration

Whenever a combustible wall is penetrated, you must frame a hole for the wall shield firestop(s). The wall shield firestop maintains minimum clearances and prevents cold air infiltration.

- The opening must be framed on all four sides using the same size framing materials as those used in the wall construction.
- SLP pipe - A wall shield firestop must be placed on each side of an interior wall. A minimum 1-1/2 in. (38 mm) overlap of attached heat shields must be maintained.
- DVP pipe - A wall shield firestop is required on one side only on interior walls. If your local inspector requires a wall shield firestop on both sides, then both wall shield firestops must have a heat shield (refer to Section 12.A.) attached to them.
- See Section 7.F. for information for regarding the installation of a horizontal termination cap.

Non-Combustible Wall Penetration

If the hole being penetrated is surrounded by non-combustible materials such as concrete, a hole with diameter one inch greater than the pipe is acceptable.

Whenever a non-combustible wall is penetrated, the wall shield firestop is only required on one side and no heat shield is necessary.

DO NOT PACK VENT FRAMING HOLE WITH INSULATION OR OTHER MATERIAL.

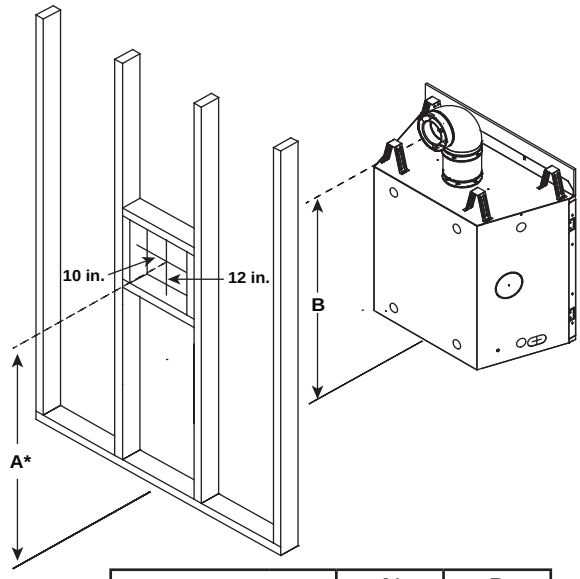

		A*	B
MER36MN	in.	48-3/4	47-3/4
	mm	1238	1212
MER42MN	in.	51-1/8	50-1/8
	mm	1299	1273

* Shows center of vent framing hole for venting. The center of the hole is one (1) in. (25 mm) above the center of the horizontal vent pipe.

Note: Center of the horizontal vent pipe to the vertical measuring surface of a trap cap is 5 inches (127 mm).

Figure 5.3 Wall Penetration

C. Ceiling Firestop/Floor Penetration Framing

WARNING! Risk of Fire! DO NOT pack insulation around the vent. Maintain clearances to vent to prevent overheating.

A ceiling firestop **MUST** be used between floors and attics.

- **DVP pipe only** - Frame an opening 10 in. by 10 in. (254 mm by 254 mm) whenever the vent penetrates a ceiling/floor (see Figure 5.4).
- **SLP pipe only** - Frame opening 9 in. x 9 in. (229 mm x 229 mm) whenever the vent penetrates a ceiling/floor (see Figure 5.4).
- Frame the area with the same sized lumber as used in ceiling/floor joist.
- The ceiling firestop may be installed above or below the ceiling joists when installed with an attic insulation shield. It must be under joists between floors that are not insulated. Refer to Figure 5.5.
- Secure in place with nails or screws.

D. Install Attic Insulation Shield

WARNING! Fire Risk. *The use of an attic shield is required to prevent loose materials or insulation from contacting the vent causing overheating and a fire.*

The International Fuel Gas Code requires an attic shield constructed of 26 gauge minimum steel that extends at least 2 in. (51 mm) above insulation.

- Attic insulation shields must meet specified clearances to combustible materials and be secured in place.
- An attic insulation shield kit is available from Hearth & Home Technologies. Contact your dealer to order. Install attic insulation shield according to instructions included with kit.

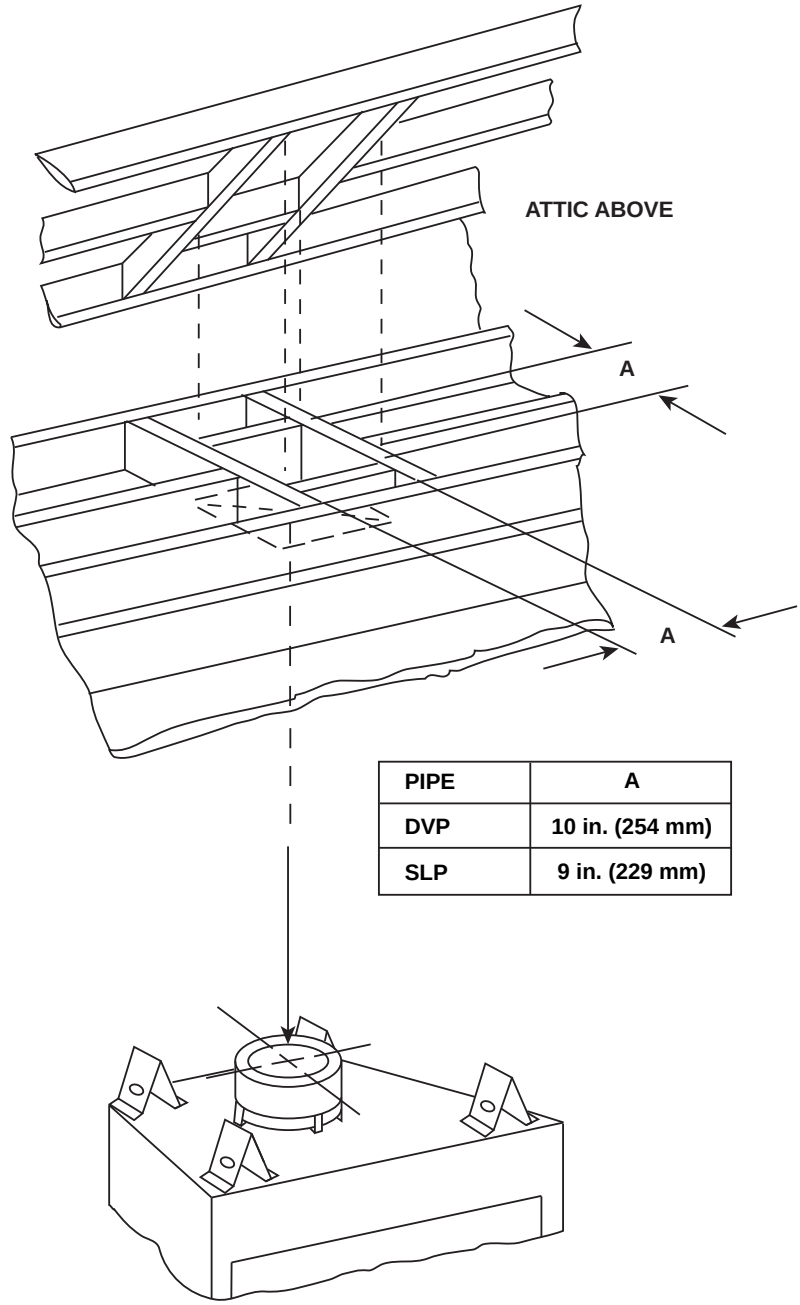

PIPE	A
DVP	10 in. (254 mm)
SLP	9 in. (229 mm)

Figure 5.4 Installing Ceiling Firestop

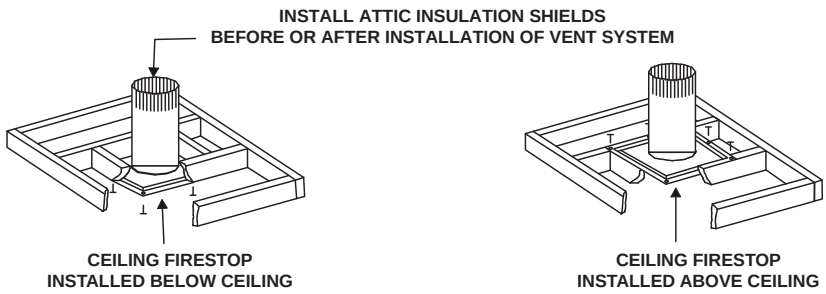

Figure 5.5 Installing the Attic Shield

6 Appliance Preparation

A. Vent Collar Preparation

CAUTION! Risk of Cuts, Abrasions or Flying Debris. *Wear protective gloves and safety glasses during installation. Sheet metal edges are sharp.*

Top Vent

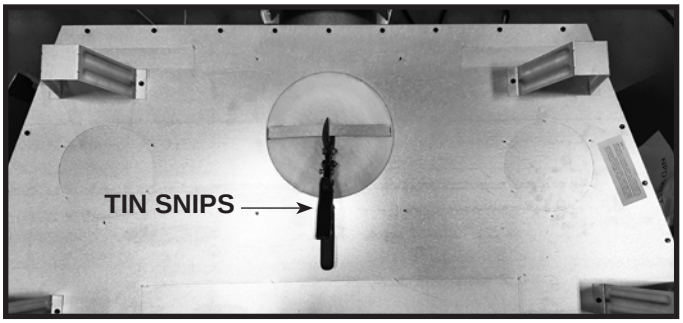

Figure 6.1 Cut Seal Cap Strap Using a Tin Snips and Bend the Pieces to 90 Degrees and Remove Seal Cap

NOTICE: *Once the seal cap has been removed it CANNOT be reattached.*

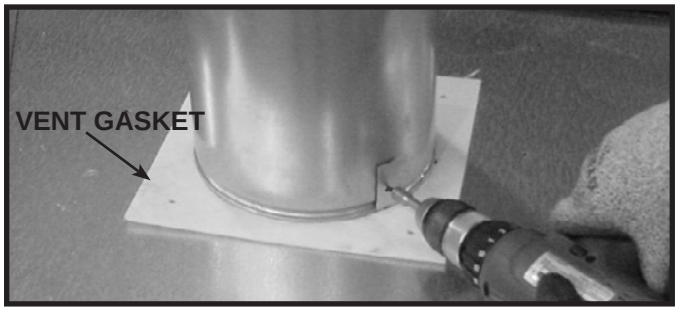

Figure 6.2 (Generic Fireplace Shown) To attach the first section of vent pipe, make sure to use the vent gasket in the manual bag to seal between the first vent component and the outer fireplace wrap. Seal with four screws or caulk with a minimum of 300 ºF continuous exposure rating may be used to hold the part in place.

Secure the first section of venting to the fireplace by screwing through the two straps left over from cutting the seal cap strap (Figure 6.2).

It is acceptable to use screws no longer than 1/2 in. (13 mm) to hold outer pipe sections together. If predrilling holes, **DO NOT** penetrate inner pipe.

B. Prepare For Heat Management

WARNING! Risk of Fire! *DO NOT block passive heat registers! Overheating of appliance and combustible materials will occur.*

WARNING! Risk of Fire! *DO NOT remove a knockout unless a heat management system will be installed in its place. Appliance and combustible materials will overheat.*

Introduction

An optional heat management system allows the heat from the appliance to be redirected as desired.

An optional heat management system must be installed by a qualified service technician at the time of the appliance installation. Follow the instructions shipped with the kit for installation and operation.

Heat Management System options are:

- HEAT-ZONE®-GAS: The heat is diverted into an adjacent room. The HZMR-ADP Heat-Zone Adapter kit may be required and is ordered separately. See Table 6.1.
- HEAT-OUT-GAS: The heat is diverted outside the home/building.
- Passive Heat (PH-MR): The heat is vented into the room in which the appliance is installed through a discharge opening(s).

NOTICE: *Additional clearances are required for heat management systems installations. Provisions must be made in advance to ensure fit within the framing.*

- Determine the heat management system(s) that will be installed.
- Locate the two heat management knockouts on the top of the appliance. Remove the knockout from the fireplace and discard it See Figure 6.3. Either one or two heat management systems may be installed. Remove the knockout(s) from the appliance with a tin snips.
- Center the duct collar around the exposed hole and attach it to the appliance with 3 screws.

  Note: Do this BEFORE final positioning of the appliance.
- Determine the location for the air register/fan housing assembly.

Reference the appropriate instructions included with the kit for the remaining installation steps.

These models may utilize two Heat Management Systems.

The HEAT-OUT-GAS kit may be used with either HEAT-ZONE®-GAS or one of the Passive Heat options.

Passive Heat may be used with HEAT-OUT-GAS or one HEAT-ZONE®-GAS. The dedicated knockouts, as shown in Figure 6.3, must be used only as indicated.

Note: When a fan is operated with the Passive Heat system, there will be a decrease in the amount of air flowing from the appliance opening. Air will be flowing from both the appliance opening and the passive heat opening.

HZMR-ADP	
HEAT-ZONE-GAS	Required
HEAT-ZONE-GAS + PASSIVE HEAT	Not Required

Table 6.1 HZMR-ADP Kit

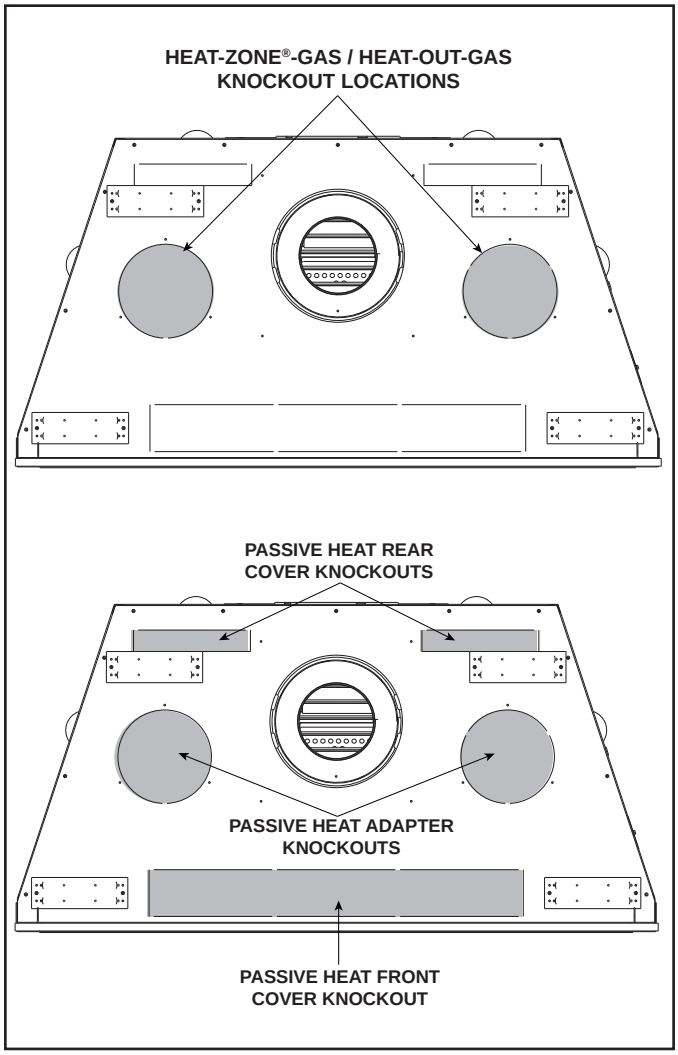

Figure 6.3 Heat Management Knockout Locations

C. Securing and Leveling the Appliance

⚠ WARNING

Risk of Fire!

Prevent contact with:

- *Sagging or loose insulation*
- *Insulation backing or plastic*
- *Framing and other combustible materials*

***DO NOT remove standoffs or** notch the framing around the appliance standoffs.*

Failure to maintain air space clearance could cause overheating and fire.

Block openings into the chase to prevent entry of blown-in insulation. Make sure insulation and other materials are secured.

The diagram shows how to properly square, position, and secure the appliance. See Figures 6.4 and 6.5. Nailing tabs are provided to secure the appliance to the framing members.

- Bend out nailing tabs on each side.
- Place the appliance into position.
- Keep nailing tabs flush with the framing.
- Level the appliance from side to side and front to back.
- "Square" the appliance by securing diagonal dimensions to within 1/4 inch of each other. See Figure 6.5.
- Shim the appliance as necessary. It is acceptable to use wood shims underneath the appliance.
- Secure the appliance to the framing by using nails or screws through the nailing tabs. Use a minimum of one fastener per nailing tab.
- Optional: Secure the appliance to the floor by inserting two screws through the pilot holes at the bottom of the appliance.

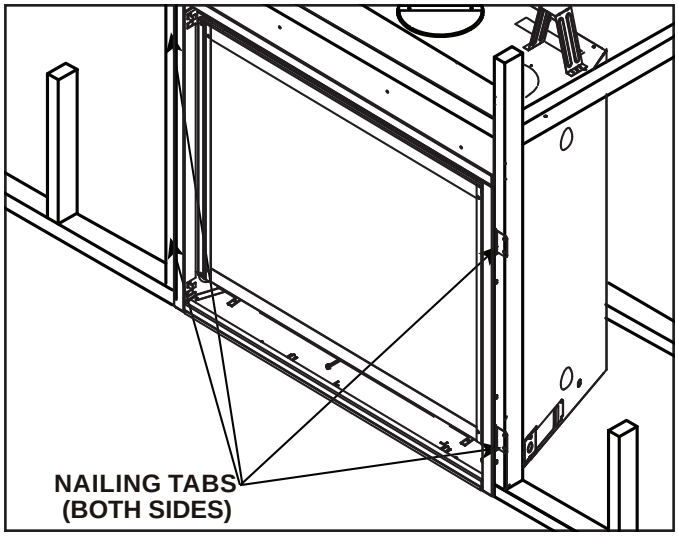

Figure 6.4 Proper Positioning and Securing of an Appliance

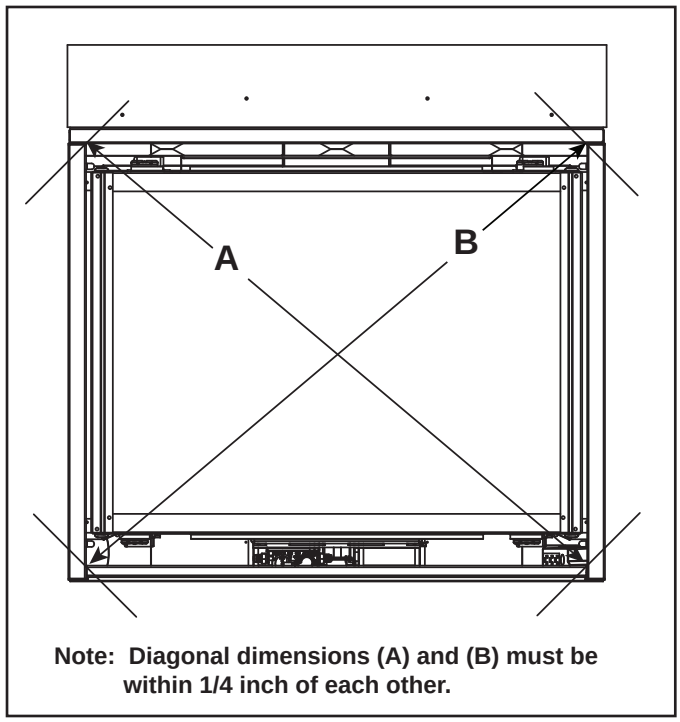

Note: Diagonal dimensions (A) and (B) must be within 1/4 inch of each other.

Figure 6.5 Positioning the Appliance Squarely

D. Non-Combustible Material (Factory-Installed)

***WARNING! Risk of Fire!** DO NOT remove factory-installed non-combustible material.*

A non-combustible board is factory-installed above the fireplace opening. Do not remove.

The factory supplied non-combustible board spans the distance from the top of the fireplace to the center of the framing header. This board must be used. See Figure 6.6.

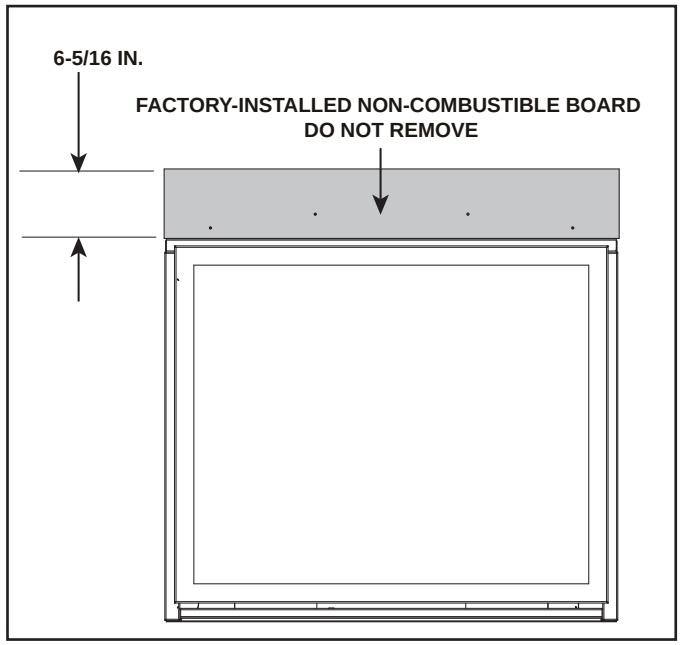

Figure 6.6 Non-Combustible Board - Generic Decorative Barrier Front Shown

7 Venting

A. Assemble Vent Sections (DVP Pipe Only)

WARNING! Risk of Fire or Explosion! *Vent sections MUST be installed correctly. Improperly installed vent sections could leak or cause appliance to overheat.*

Attach Vent to the Firebox Assembly

Note: The end of the pipe sections with the lanced tabs will face toward the appliance.

Attach the first pipe section to the starting collar:

- Lanced pipe end of the starting collar.
- Inner pipe over inner collar.
- Push the pipe section until all lanced tabs snap in place.
- Lightly tug on pipe to confirm it has locked.

Required: Commercial, Multi-family (Multi-level exceeding two stories), or High-Rise Applications

Recommended: Vent Configurations with five or more pipe joints/pipe connections

WARNING! Risk of Fire or Explosion! DO NOT *break silicone seals on slip sections. Use care when removing termination cap from slip pipe. If slip section seals are broken during removal of the termination cap, vent could leak.*

All outer pipe joints must be sealed using one of the methods below, including the slip section that connects directly to the horizontal termination cap.

- Apply a bead of silicone sealant (300 ºF minimum continuous exposure rating) inside the female outer pipe joint prior to joining sections. See Figure 7.1 **OR**
- Apply a bead of silicone sealant (300 ºF minimum continuous exposure rating) to the outside of connecting joint after joining sections **OR**

  Apply aluminum foil tape (300 ºF minimum continuous exposure rating) to the outside of connecting joint after joining sections. On horizontal pipe runs, it is recommended that the tape seam is positioned on the bottom side of the vent pipe.
- Only outer pipes need to be sealed. All unit collar, pipe, slip section, elbow and cap outer flues shall be sealed in this manner, unless otherwise stated.

Assemble Pipe Sections

Per Figure 7.2:

- Start the inner pipe on the lanced end of section A into the flared end of section B.
- Start the outer pipe of section A over the outer pipe of section B.
- Once both vents sections are started, push firmly until all lanced tabs lock into place.
- Lightly tug on the pipe to confirm the tabs have locked.

It is acceptable to use screws no longer than 1/2 in. (13 mm) to hold outer pipe sections together. If predrilling holes, **DO NOT** penetrate inner pipe.

For 90º and 45º elbows that are changing the vent direction from horizontal to vertical, one screw minimum should be put in the outer flue at the horizontal elbow joint to prevent the elbow from rotating. Use screws no longer than 1/2 in. (13 mm). If predrilling screw holes, **DO NOT** penetrate inner pipe.

Figure 7.1 High Temperature Silicone Sealant

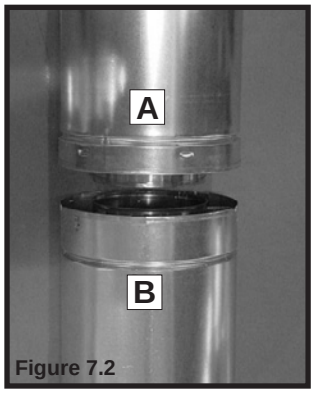

Figure 7.2

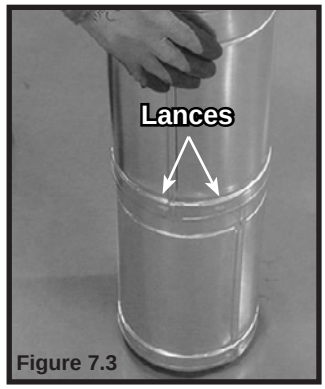

Figure 7.3

Note: Make sure that the seams are not aligned to prevent unintentional disconnection.

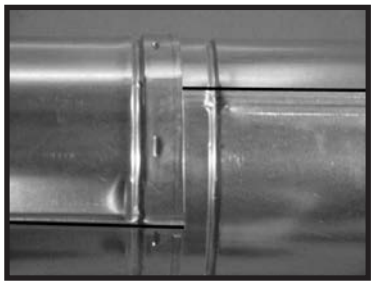

CORRECT

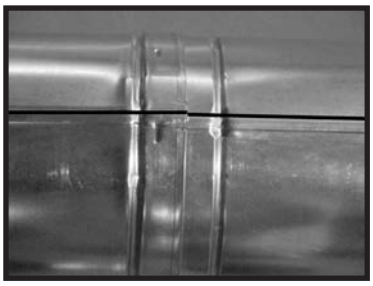

INCORRECT

Figure 7.4 Seams

NOTICE: *When installing a vent system with an HRC termination cap, all pipe system joints shall be sealed using a high temperature silicone sealant (300 ºF minimum continuous exposure rating).*

- *Apply a bead of silicone sealant (300 ºF minimum continuous exposure rating) inside the female outer pipe joint prior to joining sections.*
- *Only outer pipes are sealed, sealing the inner flue is not required.*
- *All unit collar, pipe, slip section, elbow and cap outer flues shall be sealed.*

Assemble Vent Sections (SLP Only)

WARNING! Risk of Fire or Explosion! *Vent sections MUST be installed correctly. Improperly installed vent sections could leak or cause appliance to overheat.*

To attach the first vent component to the starting collars of the appliance:

- Attach a DVP-SLP24 or DVP-2SL adapter to the starting collar of the appliance.
- Lock the vent components into place by sliding the pipe section onto the collar.
- Align the seam of the pipe and seam of collar to allow engagement. Rotate the vent component to lock into place. Use this procedure for all vent components. See Figure 7.5.
- Slide the gasket over the first vent section and place it flush to the appliance. This will prevent cold air infiltration. Caulk with a minimum of 300 ºF continuous exposure rating may be used to hold the part in place.
- Continue adding vent components, locking each succeeding component into place.
- Ensure that each succeeding vent component is securely fitted and locked into the preceding component.

It is acceptable to use screws no longer than 1/2 in. (13 mm) to hold outer pipe sections together. If predrilling holes, **DO NOT** penetrate inner pipe.

Required: Commercial, Multi-family (Multi-level exceeding two stories), or High-Rise Applications

Recommended: Vent Configurations with five or more pipe joints/pipe connections

WARNING! Risk of Fire or Explosion! DO NOT *break silicone seals on slip sections. Use care when removing termination cap from slip pipe. If slip section seals are broken during removal of the termination cap, vent could leak.*

All outer pipe joints must be sealed using one of the methods below, including the slip section that connects directly to the horizontal termination cap.

- Apply a bead of silicone sealant (300 ºF minimum continuous exposure rating) inside the female outer pipe joint prior to joining sections. See Figure 7.1 **OR**
- Apply a bead of silicone sealant (300 ºF minimum continuous exposure rating) to the outside of connecting joint after joining sections **OR**
  Apply aluminum foil tape (300 ºF minimum continuous exposure rating) to the outside of connecting joint after joining sections. On horizontal pipe runs, it is recommended that the tape seam is positioned on the bottom side of the vent pipe.
- Only outer pipes need to be sealed. All unit collar, pipe, slip section, elbow and cap outer flues shall be sealed in this manner, unless otherwise stated.

***WARNING! Risk of Fire or Explosion! DO NOT** break silicone seals on slip sections. Use care when removing termination cap from slip pipe. If slip section seals are broken during removal of the termination cap, vent could leak.*

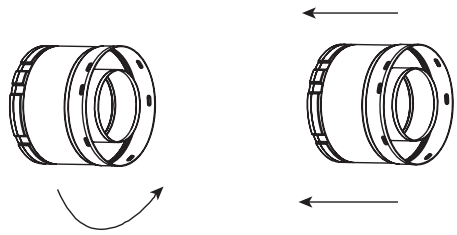

Note: Align seams to engage pipe, then rotate counterclockwise to lock

Figure 7.5 Adding Venting Components

***NOTICE:** When installing a vent system with an HRC termination cap, all pipe system joints shall be sealed using a high temperature silicone sealant (300 ºF minimum continuous exposure rating).*

- *Apply a bead of silicone sealant (300 ºF minimum continuous exposure rating) inside the female outer pipe joint prior to joining sections.*
- *Only outer pipes are sealed, sealing the inner flue is not required.*
- *All unit collar, pipe, slip section, elbow and cap outer flues shall be sealed.*

B. Assemble Slip Sections

- Slide the inner flue of the slip section into the inner flue of the pipe section and the outer flue of the slip section over the outer flue of the pipe section. See Figure 7.6.
- Slide together to the desired length.

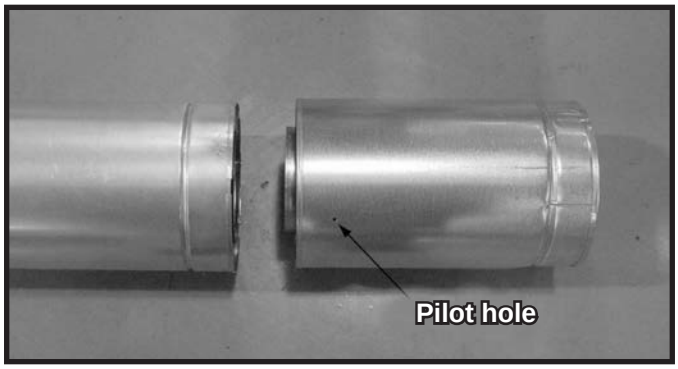

Figure 7.6 Slip Section Pilot Holes

- Maintain a 1-1/2 in. (38 mm) overlap between the slip section and the pipe section.
- Secure the pipe and slip section with two screws no longer than 1/2 in. (13 mm), using the pilot holes in the slip section. See Figure 7.7.

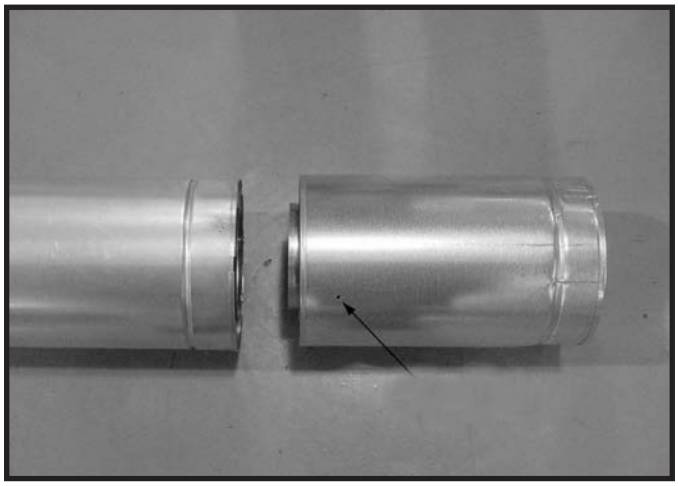

Figure 7.7 Screws into Slip Section

- Continue adding pipe as necessary following instructions in “Assembling Pipe Sections.”

***NOTICE:** If slip section is too long, the inner and outer flues of the slip section can be cut to the desired length.*

C. Secure the Vent Sections

WARNING! Risk of Fire, Explosion or Asphyxiation! *Improper support could allow vent to sag and separate. Use vent run supports and connect vent sections per installation instructions.* ***DO NOT*** *allow vent to sag below connection point to appliance.*

- Vertical runs originating off the top of the appliance, with no offsets, must be supported every 8 feet (2.44 m) after the maximum allowed 25 feet (7.62 m) of unsupported rise.
- Vertical runs originating off the rear of the appliance, or after any elbow, must be supported every 8 feet (2.44 m).
- Horizontal runs must be supported every 5 feet (1.52 m).
- Vent supports or plumbers strap (spaced 120º apart) may be used to support vent sections. See Figures 7.8 and 7.9.

  Note: Figures 7.8 and 7.9 are to be used for reference only. Method of strap installation could vary by configuration of vent system.
- Wall shield firestops may be used to provide horizontal support to vent sections.
- SLP ceiling firestops have tabs that may be used to provide vertical support.

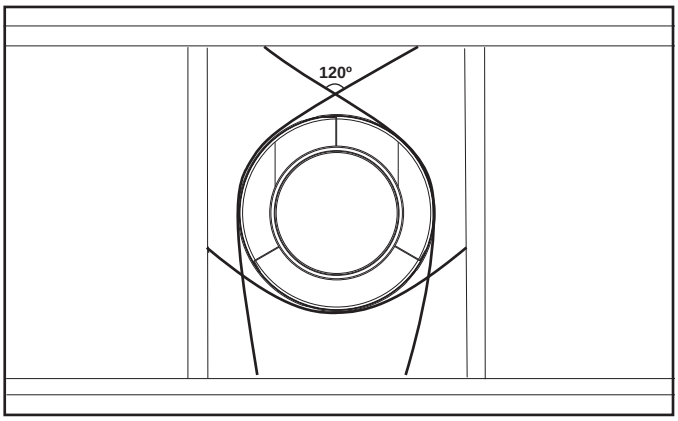

Figure 7.8 Securing Vertical Pipe Sections

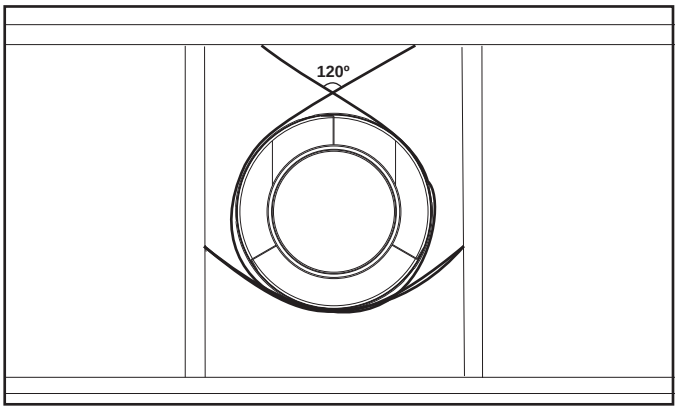

Figure 7.9 Securing Horizontal Pipe Sections

D. Disassemble Vent Sections

- Rotate either section (see Figure 7.10) so the seams on both pipe sections are aligned as shown in Figure 7.11.
- Pull carefully to separate the pieces of pipe.

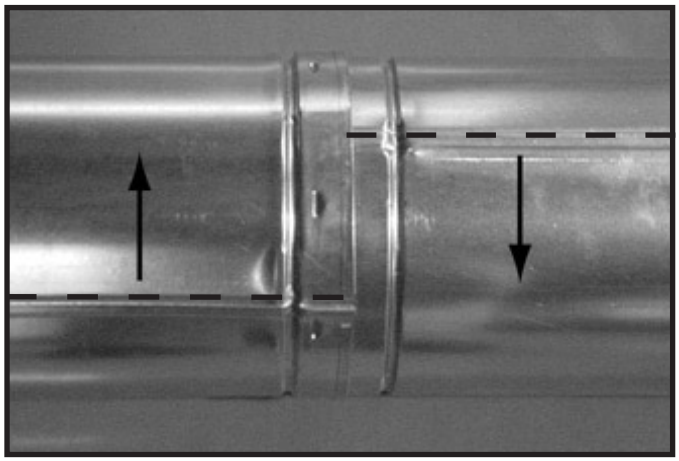

Figure 7.10 Rotate Seams for Disassembly

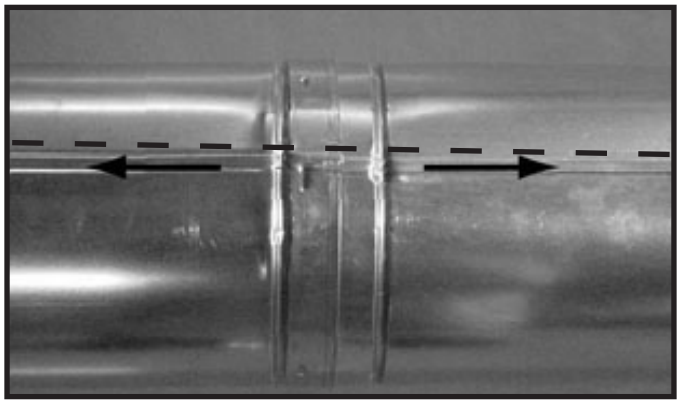

Figure 7.11 Align and Disassemble Vent Sections

E. Vertical Termination Requirements

Install and Seal Metal Roof Flashing

- See minimum vent heights for various pitched roofs (Section 4, Figure 4.1) to determine the length of pipe to extend through the roof.
- Slide the roof flashing over the pipe sections extending through the roof as shown in Figure 7.12.
- Use an elastomeric or silicone sealant with a minimum of 150 ºF temperature rating to seal the metal roof flashing.

Note: When installing a silicone or EPDM pipe flashing boot on a metal roof, it is recommended to put a bead of 100% silicone sealant where the boot contacts the vent pipe to prevent the entry of water. Follow the manufacturer's recommendations when installing the boot.

NOTICE: *Failure to properly-seal the roof flashing and pipe seams could permit entry of water.*

- Seal the gap between the roof flashing and the outside diameter of the pipe.
- Seal the perimeter of the flashing where it contacts the roof surface. See Figure 7.12.
- Seal the exposed pipe section seams that are located above the roof.

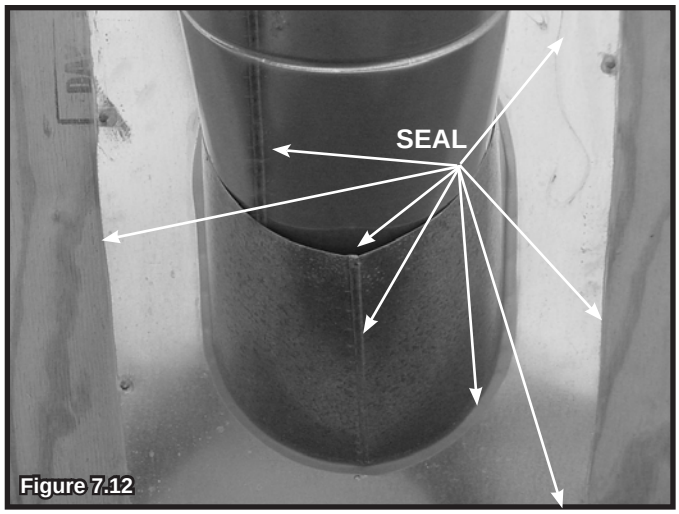

Figure 7.12

Assemble and Install Storm Collar

CAUTION! Risk of Cuts, Abrasions or Flying Debris. *Wear protective gloves and safety glasses during installation. Sheet metal edges are sharp.*

- Slide the storm collar onto the exposed pipe section and align brackets.
- Insert a bolt (provided) through the brackets and install nut. Do not completely tighten.

Figure 7.13 Insert Bolt into Brackets

- Slide the assembled storm collar down the pipe section until it rests on the roof flashing. See Figure 7.13.
- Tighten nut and make sure the collar is tight against the pipe section.
- Seal around the top of the storm collar. See Figure 7.14.

Install Vertical Termination Cap

- Attach the vertical termination cap by sliding the inner collar of the cap into the inner flue of the pipe section while placing the outer collar of the cap over the outer flue of the pipe section.
- Secure the cap by driving three self-tapping screws (supplied) through the pilot holes in the outer collar of the cap into the outer flue of the pipe. See Figure 7.14.

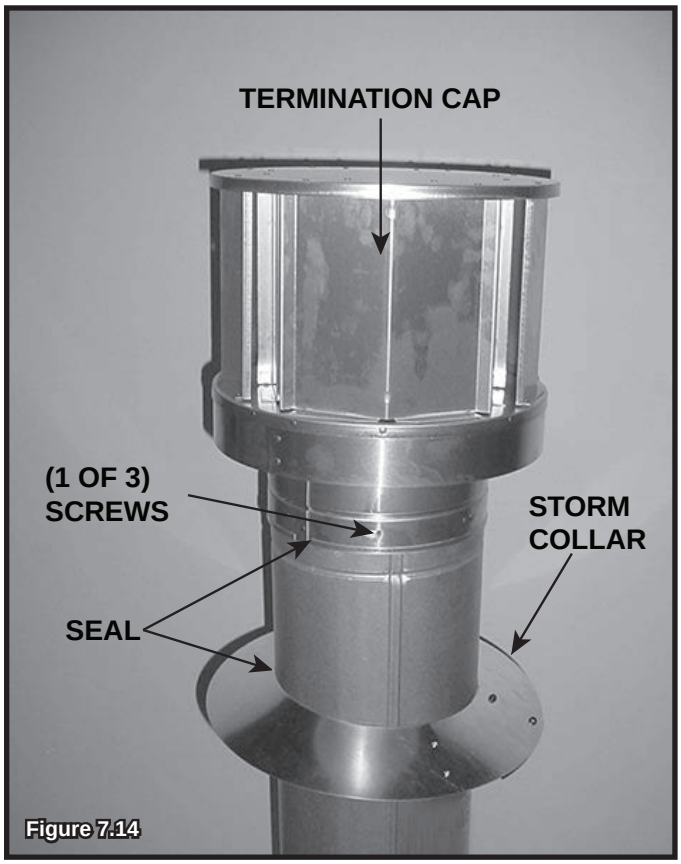

Figure 7.14

F. Horizontal Termination Requirements

Heat Shield Requirements for Horizontal Termination

WARNING! Risk of Fire! *To prevent overheating and fire, heat shields must extend through the entire wall thickness.*

- ***DO NOT*** *remove the heat shields attached to the wall shield firestop and the horizontal termination cap (shown in Figure 7.15).*
- *Heat shields must overlap 1-1/2 in. (38 mm) minimum.*

There are two sections of the heat shield. One section is factory-attached to the wall shield firestop. The other section is factory-attached to the cap. See Figure 7.15.

If the wall thickness does not allow the required 1-1/2 in. (38 mm) heat shield overlap when installed, an extended heat shield must be used.

- If the wall thickness is less than 4 in./102 mm (DVP) or 4-3/8 in./ 111 mm (SLP), the heat shields on the cap and wall shield firestop must be trimmed. A minimum 1-1/2 in. (38 mm) overlap MUST be maintained.
- Use an extended heat shield if the finished wall thickness is greater than 7-1/4 in. (184 mm).
- The extended heat shield may need to be cut to length maintaining sufficient length for a 1-1/2 in. (38 mm) overlap between heat shields.
- Attach the extended heat shield to either of the existing heat shields using the screws supplied with the extended heat shield. Refer to Vent Components document included in manual bag.
- Rest the small leg on the extended heat shield on top of the pipe section to properly space it from the pipe section.

Important Notice: Heat shields may not be field constructed.

Install Horizontal Termination Cap (DVP and SLP Pipe)

WARNING! Risk of Fire! *The telescoping flue section of the termination cap MUST be used when connecting vent.*

- *1-1/2 (38 mm) minimum overlap of flue telescoping section is required.*

Failure to maintain overlap could cause overheating and fire.

- Vent termination must not be recessed in the wall. Siding may be brought to the edge of the cap base.
- Flash and seal as appropriate for siding material at outside edges of cap.
- When installing a horizontal termination cap, follow the cap location guidelines as prescribed by current **ANSI Z223.1** and **CAN/CGA-B149** installation codes and refer to Section 4 of this manual.

CAUTION! Risk of Burns! *Local codes may require installation of a cap shield to prevent anything or anyone from touching the hot cap.*

NOTICE: *For certain exposures which require superior resistance to wind-driven rain penetration, a flashing kit and HRC caps are available. When penetrating a brick wall, a brick extension kit is available for framing the brick.*

Note: When using termination caps with factory-supplied heat shield attached, no additional wall shield firestop is required on the exterior side of a combustible wall.

DVP-TRAP1 Exception

See Section 3.C for termination cap exception (DVP-TRAP1 or equivalent) for top vent, horizontally terminated installation.

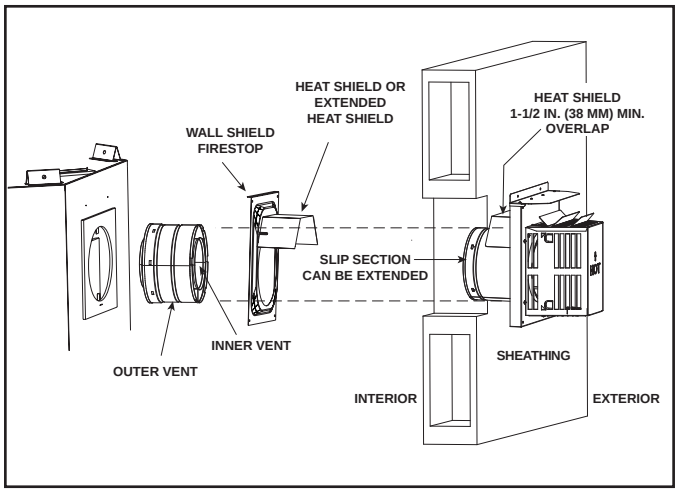

Figure 7.15 Venting Through the Wall

8 Electrical Information

A. General Information

***WARNING! Risk of Shock! DO NOT** wire 110-120 VAC to the ignition module or to the appliance wall switch.*

Incorrect wiring will damage controls.

***NOTICE:** This appliance must be electrically wired and grounded in accordance with local codes or, in the absence of local codes, with* **National Electric Code ANSI/NFPA 70-latest edition** *or the* **Canadian Electric Code CSA C22.1.**

- Wire the appliance circuit using a minimum 14-2 AWG with ground to unswitched 110-120 VAC. This is required for proper operation of the appliance.
- A 110-120 VAC circuit for this product must be protected with ground-fault circuit interrupter protection, in compliance with the applicable electrical codes, when it is installed in locations such as in bathrooms or near sinks.
- Low voltage and 110-120 VAC voltage cannot be shared within the same wall box.
- In some instances, the spark ignition of the fireplace may cause intermittent, non-damaging, interference during the lighting sequence with a TV plugged into the same circuit. It is recommended that the fireplace and TV use different circuits to mitigate the interference potential. If interference is occurring on the same circuit, the use of surge protectors may help alleviate the interference.

Junction Box Wiring

If the box is being wired from the **INSIDE** of the appliance:

- Remove the screw attaching the junction box/receptacle to the outer shell, rotate the junction box inward to disengage it from the outer shell. See Figure 8.1 and Figure 8.2.
- Pull the electrical wires from outside the appliance through the opening into the valve compartment and secure wires with a Romex connector. See Figure 8.1.
- Make all necessary wire connections to the junction box/receptacle and reattach the junction box/receptacle to the outer shell.

Accessories Requirements

- This appliance may be used with a wall switch, wall mounted thermostat and/or a remote control.

Wiring for optional Hearth & Home Technologies approved accessories should be done now to avoid reconstruction. Follow instructions that come with those accessories.

Electrical Service and Repair

***WARNING! Risk of Shock!** Label all wires prior to disconnection when servicing controls. Wiring errors could cause improper and dangerous operation. Verify proper operation after servicing.*

***WARNING! Risk of Shock!** Replace damaged wire with type 105º C rated wire. Wire must have high temperature insulation.*

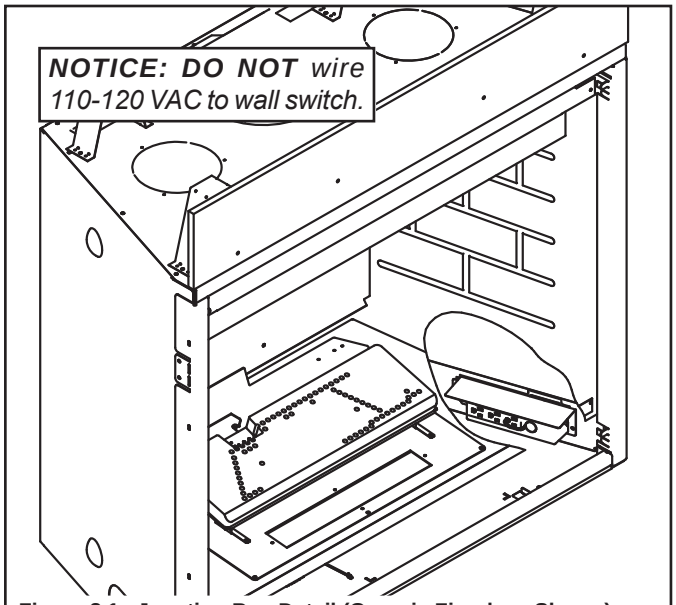

Figure 8.1 Junction Box Detail (Generic Fireplace Shown)

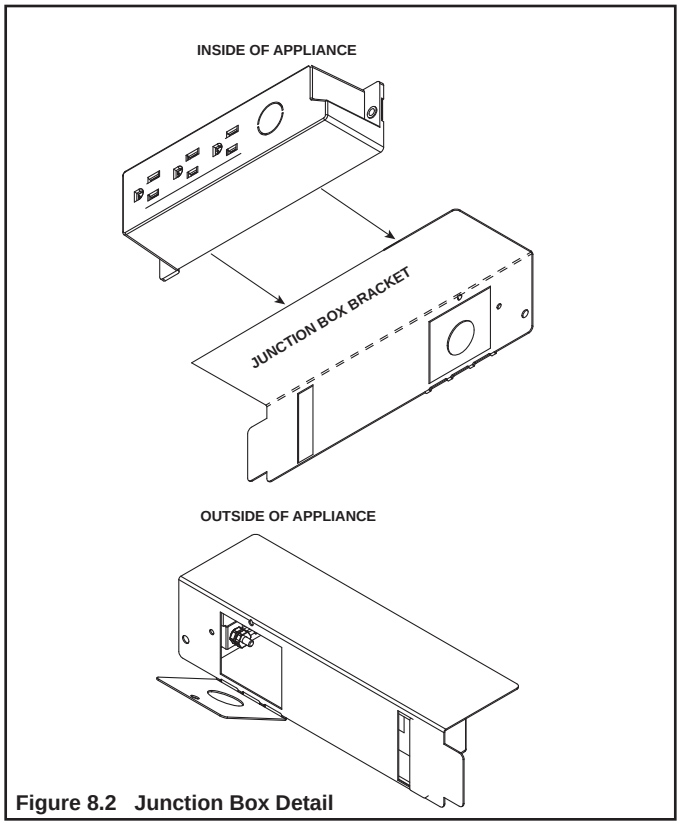

Figure 8.2 Junction Box Detail

Component Tray

The electrical components are installed on the component tray, noted in Figure 8.3. The components may be removed if necessary. Once components are reinstalled, ensure the electrical components are connected properly.

To remove the IFT-ECM, gently pull up on the ECM, lifting it enough to clear the tabs (A) and disengage from tab B.

Wire Management

Proper wire management is required for proper operation of the appliance. Component damage could occur if electrical cords and/or wires contact the firebox. Ensure wires are not contacting the firebox.

NOTICE: Verify proper wire managment prior to operation of the appliance. Component damage could occur.

- *Verify electrical wire connections.*
- *Ensure wires **DO NOT** contact firebox.*

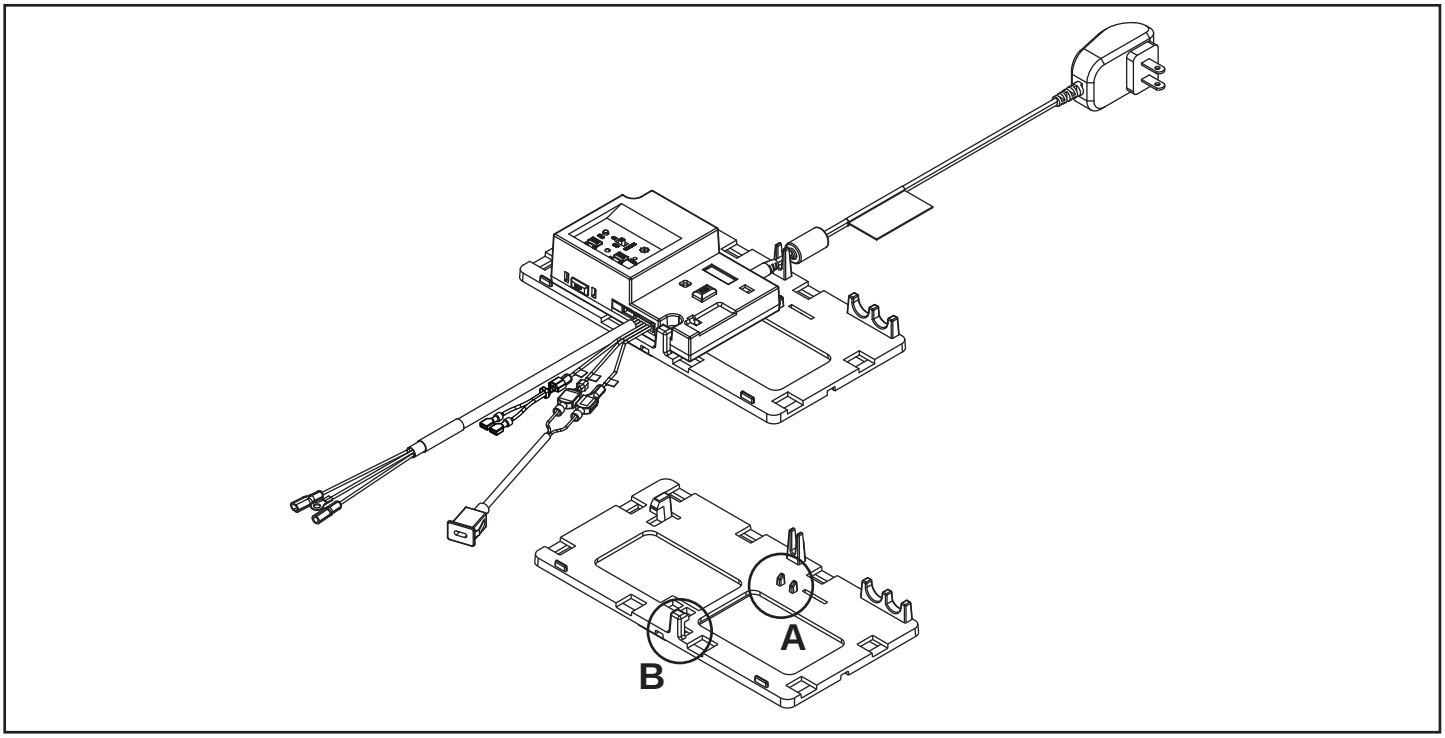

Figure 8.3 Electrical Component Tray

B. Wiring Requirements

IntelliFire Touch® Ignition System Wiring

- Wire the appliance junction box to 110-120 VAC for proper operation of the appliance.

***WARNING! Risk of Shock or Explosion! DO NOT** wire IPI controlled appliance junction box to a switched circuit. Incorrect wiring will override IPI safety lockout.*

- Refer to Figure 8.4, IntelliFire Touch Wiring Diagram.
- This appliance is equipped with an IntelliFire Touch control valve which operates on a 6 volt/1.5 AMP system.
- Plug the 6 volt transformer plug into the appliance junction box to supply power to the unit OR install 4 AA cell batteries (not included) into the battery pack before use.

***NOTICE:** Batteries should only be used as a power source in the event of an emergency power outage. Batteries should not be used as a primary long-term power source. Battery polarity must be correct when installing batteries. When using batteries as a power source, the 6-volt transformer must be unplugged from the receptacle.*

Do not store batteries in the battery pack when the appliance is powered by the 6 volt transformer connected to permanent electrical service.

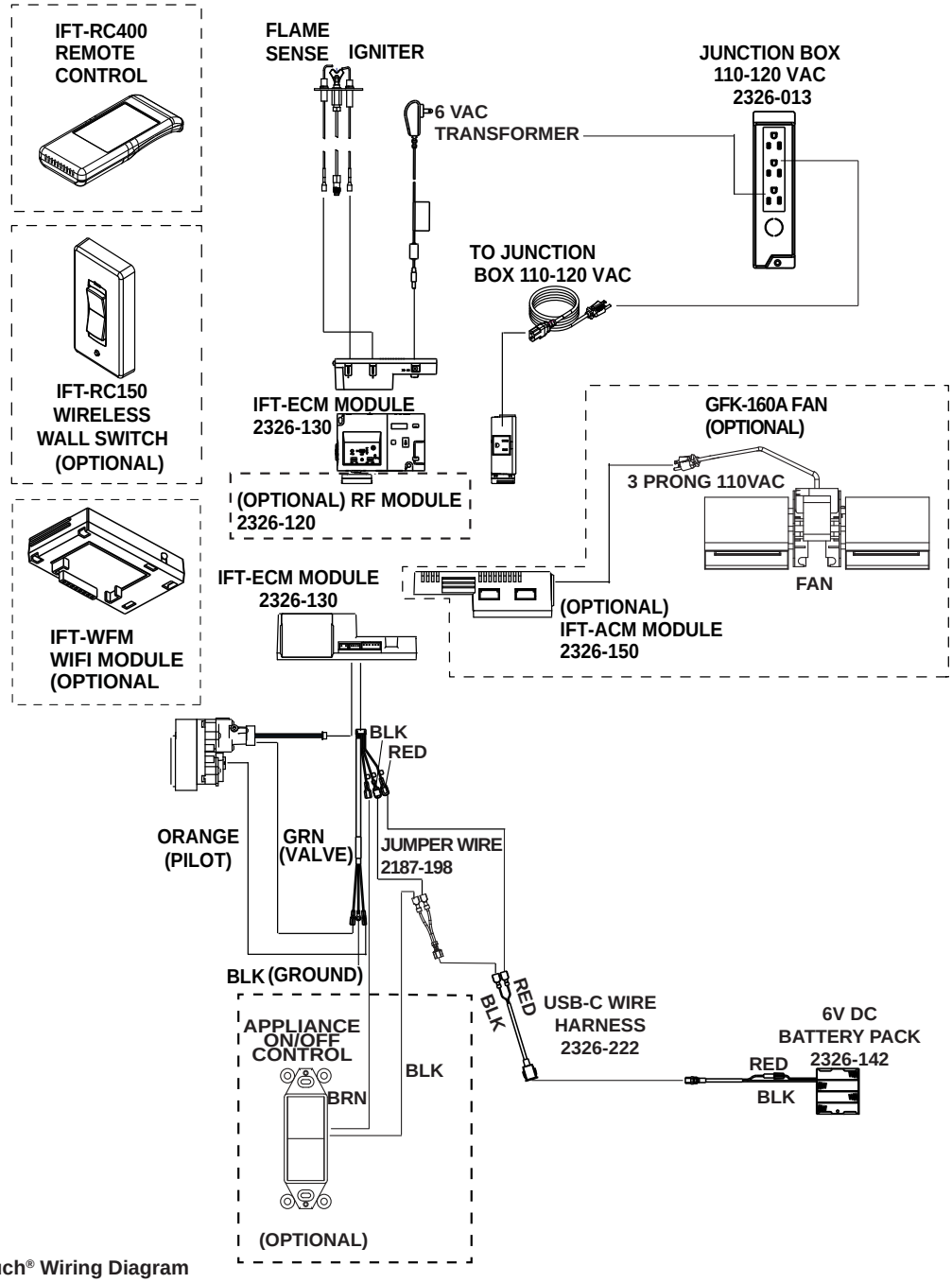

Figure 8.4 IntelliFire Touch® Wiring Diagram

C. Fan Installation

If appliance is not installed, fan installation should be performed by a qualified service technician.

Option 1 (Prior to installation of appliance):

- Remove the screws on the fan access plate on the back of the appliance. See Figure 8.5.
- Remove fan access plate and install fan through the fan access cavity.
- Install and wire the fan per instruction shipped with the fan.
- Reinstall the fan access plate back on the appliance.

Option 2:

- Remove decorative barrier front, glass, logs, base pan assembly, burner assembly and valve plate assembly.
- Install fan through the valve plate cavity. See Figure 8.6.
- Install and wire the fan per instruction shipped with the fan. Figure 8.4 also shows additional details.
- Reinstall valve plate assembly, burner assembly, basepan assembly, logs, appliance glass and decorative barrier front.

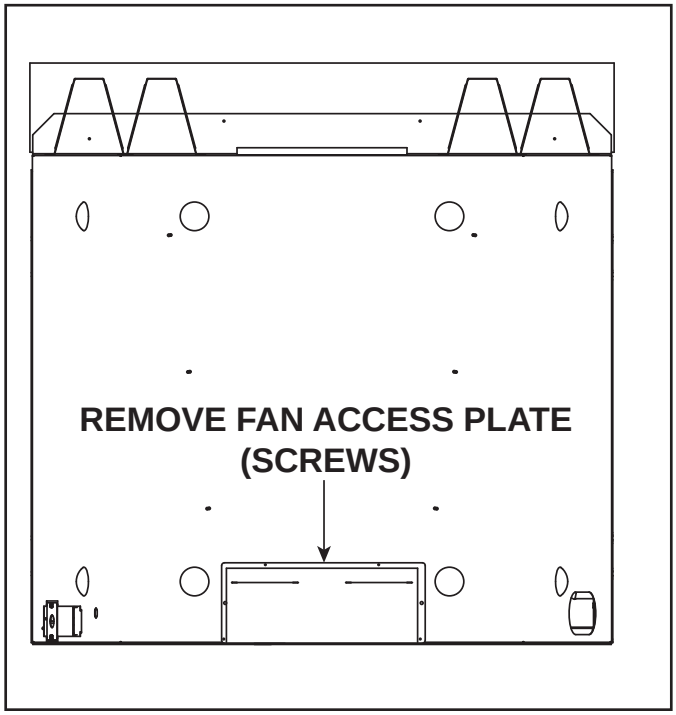

Figure 8.5 Remove Fan Access Plate

D. Service for Fan

If appliance is already installed, service should be performed by a qualified service technician.

- Remove decorative barrier front, glass, logs, base pan assembly, burner assembly and valve plate assembly.
- Service can be performed through the valve plate cavity. See Figure 8.6.
- Reinstall valve plate assembly, burner assembly, basepan assembly, logs, appliance glass and decorative barrier front.

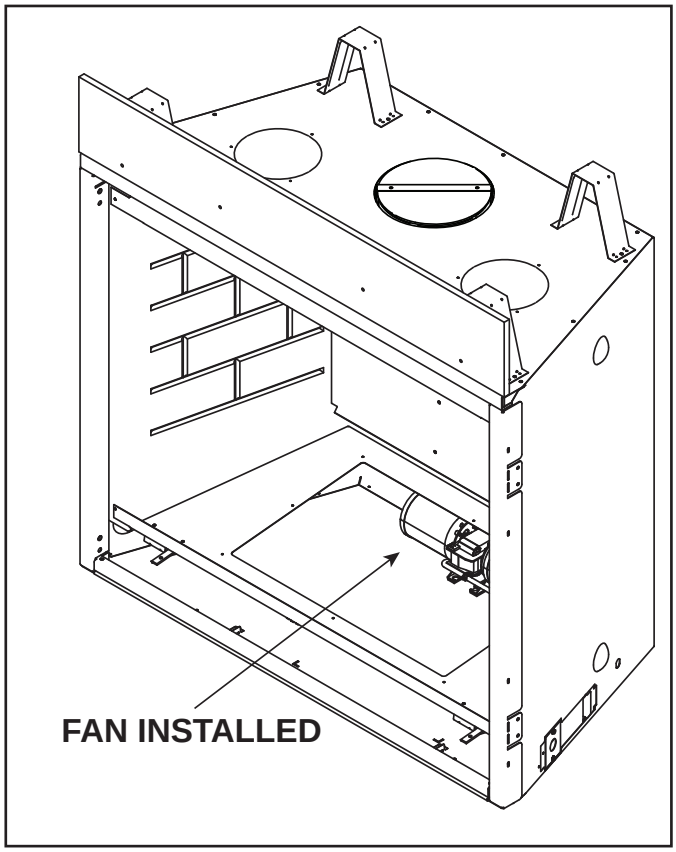

Figure 8.6 Fan Installed in Valve Plate Cavity

9 Gas Information

⚠ WARNING

Risk of Fire! Risk of Explosion! Risk of Asphyxiation!

Follow all instructions and warnings for installing and servicing gas line.

- Gas line installation and service must be performed by a qualified installer or licensed plumber in accordance with all applicable codes for the installation location (NFPA 54 / ANSI Z223.1, the current International Fuel Gas Code, or CAN/CSA B149 in Canada) (In the Commonwealth of Massachusetts installation must be performed by a licensed plumber or gas fitter).
- Check all fittings and connections by means of a listed combustible gas detector, a noncorrosive leak detection fluid, or other approved leak detection method. ***DO NOT*** use open flame.

⚠ WARNING

Risk of Fire! Risk of Explosion!

Pressure exceeding 1/2 PSIG (14 in. w.c. / 3.5 kPa) will damage gas valve control.

- Disconnect appliance and its manual shutoff valve BEFORE line pressure testing.
- Cap outlet on piping system at appliance connection BEFORE line pressure testing.
- Connect appliance AFTER confirming piping system pressure is equal or less than 1/2 PSIG (14 in. w.c./ 3.5 kPa).

A. Fuel Conversion

WARNING! Risk of FIre or Explosion! *Appliance must be set up for compatible gas type.*

- ***This appliance is designed to operate using only natural gas. Gas conversion is NOT allowed for this appliance.***

B. Gas Pressure

- Install pressure regulator upstream of gas valve if line inlet pressure exceeds 1/2 PSIG.
- Recommended inlet pressure for optimal appliance performance: 7.0 in. w.c. (NG)
- Pressure requirements when in operation are:

Gas Pressure	Natural Gas
Minimum inlet pressure	5.0 in. w.c.
Maximum inlet pressure	10.0 in. w.c.
Manifold pressure	3.5 in. w.c.

- Elongated pressure taps are recommended for gas pressure testing on these models.
- Verify inlet pressure is within specified range, including when other household gas appliances are operating.

Note: A listed (and Commonwealth of Massachusetts approved) 1/2 in. (13 mm) T-handle manual shut-off valve and flexible gas connector are connected to the 1/2 in. (13 mm) control valve inlet.

- **If substituting for these components, please consult local codes for compliance.**

C. Gas Connection and Gas Line Purging

⚠ WARNING

Risk of Fire! Risk of Explosion!

Gas buildup during line connection and purging could ignite.

- Support gas control when attaching pipe to prevent bending gas line.
- Gas line installation and purging of the gas fuel line MUST be performed by a qualified service technician or a licensed plumber in accordance with the applicable gas code for the installation location (NFPA 54 / ANSI Z223.1, the current International Fuel Gas Code, or CAN/CSA B149 in Canada).
- Use a listed combustible gas detector, a noncorrosive leak detection fluid, or other approved leak detection method to check all fittings and connections for gas leaks before lighting the appliance.
- Ensure ventilation.
- Eliminate ignition sources, such as sparks or open flames.

- Refer to Section 3 for location of gas line access in appliance.
- The bottom surround for this appliance may be removed to gain access to the control cavity for ease of access during the gas connection process. See Figure 9.1 and Figure 9.4.
- Pipe incoming gas line into valve compartment.
- The gap between supply piping and gas access hole may be sealed with caulk or aluminum foil tape with a minimum of 300 ºF continuous exposure rating or stuffed with non-combustible, unfaced insulation to prevent cold air infiltration.
- Ensure that gas line does not come in contact with outer wrap of the appliance. Follow local codes.
- Connect incoming gas line to the 1/2 in. (13 mm) NPT connection on manual shutoff valve.
- A small amount of air will be in the gas supply line and must be purged. Light the appliance to allow air to purge through the pilot assembly.

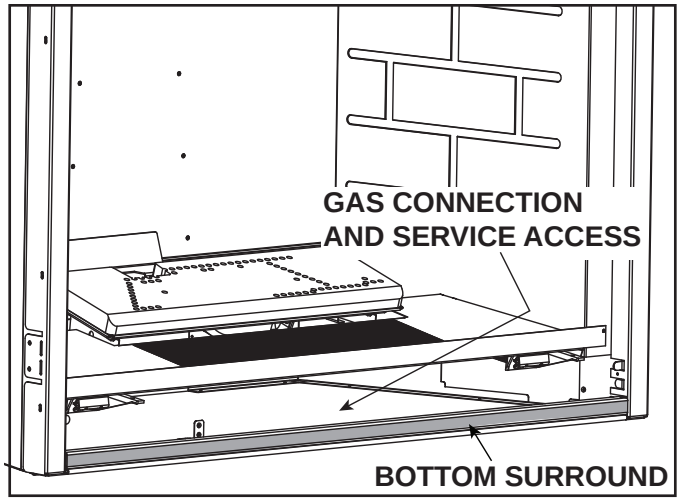

Figure 9.1 Bottom Surround Removal (Generic Fireplace Shown)

D. High Altitude Installations

NOTICE: *If the heating value of the gas has been reduced, these rules do not apply. Check with your local gas utility or authorities having jurisdiction.*

When installing above 2000 feet elevation:

- In the USA: Reduce input rate 4% for each 1000 feet above 2000 feet.
- In CANADA: Input ratings are certified without a reduction of input rate for elevations up to 4500 feet (1370 m)above sea level. Please consult provincial and/or local authorities having jurisdiction for installations at elevations above 4500 feet (1370 m).

Check with your local gas utility to determine proper orifice size.

E. Air Shutter Setting

WARNING! *Risk of Explosion or Delayed Ignition! Improperly adjusted air shutter could cause soot buildup.*

CAUTION! Risk of Burns! *Components are HOT! Wear protective gloves when adjusting shutter.*

NOTICE: *If sooting occurs, provide more air by opening the air shutter.*

Air shutter settings should be adjusted by a qualified service technician at the time of installation. The air shutter is set at the factory for a typical minimum vent run which consists of enough horizontal vent pipe to terminate through a 2x6 wall:

Top Vented with the required six inch minimum vertical, one 90 degree elbow and DVP-TRAP2 termination cap

It may need to be adjusted for other venting

scenarios. Adjust air shutter for different vent runs. See Figure 9.2.

- Loosen the wing nut.
- Move the air handle to the right to open the air shutter.
- Move the air handle to the left to close the air shutter.
- Tighten the wing nut.

Air Shutter Settings

(Factory Set to Minimum Vent Runs)

MODEL	GAS TYPE	MINIMUM VENT RUN
MER36MN	NG	3/4 IN.
MER42MN	NG	3/4 IN.

Shutter Setting Verification / Flame Appearance

- After 15 minutes, the flames will be a yellow/blue mix. The front flames may be blue at this time.
- After 30 minutes, the flames should be yellow with some blue flames near the burner ports.
- After 1 hour, the flame will be at its maximum maturity.

NOTICE: *Flames should not appear orange or stretch to the top refractory/ top of firebox. If flames are dark orange with dark, smoky tips, provide more primary air to the burner by opening the air shutter accordingly.*

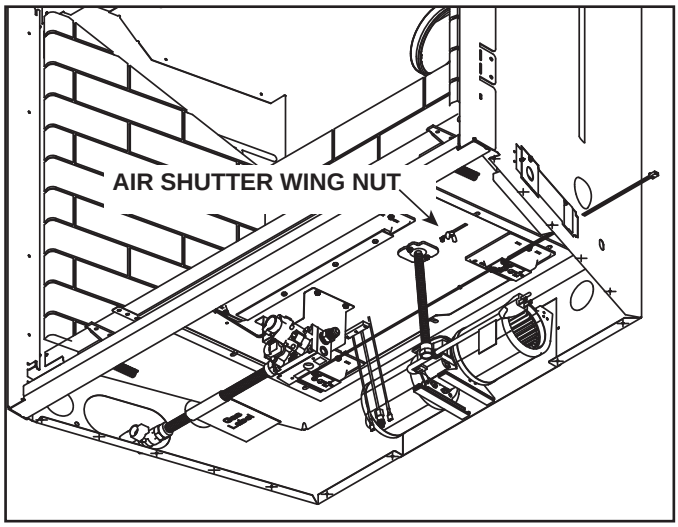

Figure 9.2 Air Shutter (Generic Fireplace Shown)

Burner Identification

Figure 9.3 illustrates the identification pattern of the burner. This can be found on the underside of the burner along an edge.

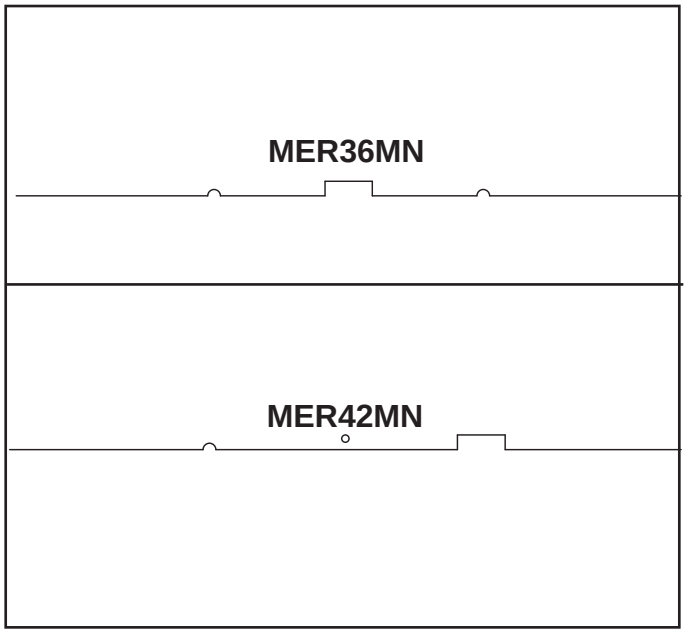

Figure 9.3 Burner Identification

F. Service/Replace Appliance Gas Valve

WARNING! Risk of Fire or Explosion! *Turn off gas to appliance before removing components. Support gas line to prevent bending.*

- Remove decorative barrier front, glass, logs, base pan assembly, burner assembly and valve plate assembly. See Figure 9.4.
- Perform service or replace gas valve.

WARNING! Risk of Fire, Explosion or Asphyxiation! *Check all fittings and connections with a non-corrosive commercially available leak-check solution.* ***DO NOT*** *use open flame. Fittings and connections could have loosened during removal of valve plate assembly.*

- Reinstall valve plate assembly, burner assembly, basepan assembly, logs and appliance glass and front.

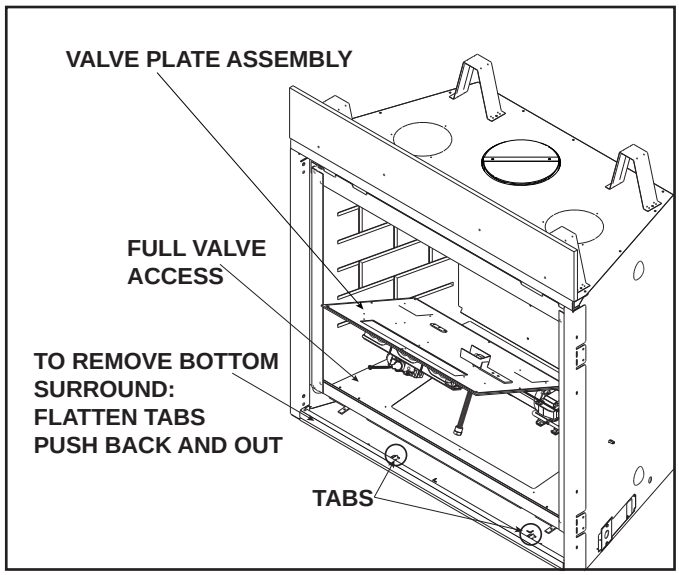

Figure 9.4 Gas Valve Access (Generic Fireplace Shown)

10 Finishing

A. Facing Material

⚠ WARNING

Risk of Fire!

DO NOT *apply combustible materials beyond the minimum clearances. Comply with all minimum clearances to combustibles as specified in this manual. Materials overlapping into non-combustible zones could ignite and will interfere with air flow through decorative barrier fronts.*

- Metal front of appliance may be covered with non-combustible materials only.
- Facing and/or finishing materials must not interfere with air flow through decorative barrier fronts, removal of decorative barrier fronts or access for service.
- Facing and/or finishing materials must never overhang into the glass opening.
- Observe all clearances when applying combustible materials.
- Seal gaps between the finished wall and appliance top and sides using a 300 ºF minimum sealant. Refer to Figure 10.1 and Figure 10.2.
- Finishing materials must be installed with no gaps in order to prevent the escape of heat between the finishing material and the wall. See Figure 10.1.

NOTICE: *Surface temperatures around the appliance will become warm while the appliance is in operation. Ensure finishing materials used for all surfaces (floor, walls, mantels, etc.) will withstand temperatures up to 190ºF.*

WARNING! *Risk of Overheating!* ***DO NOT*** *allow gap between finishing materials and front of appliance.*

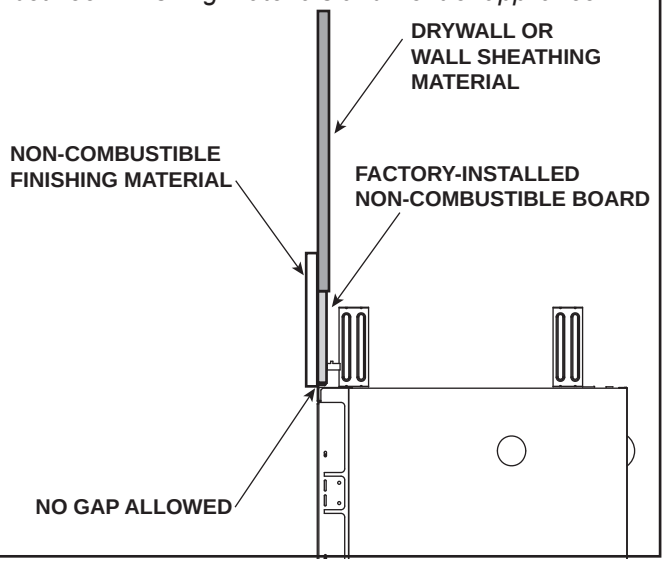

Figure 10.1 Finishing Material Installed

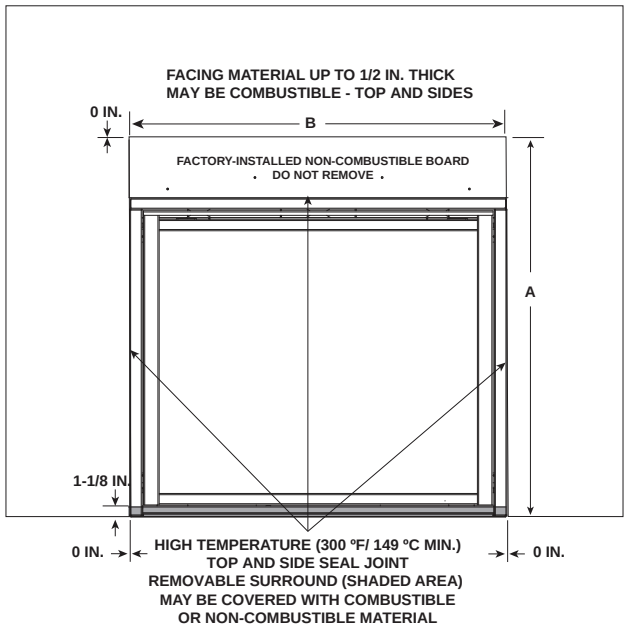

		A	B
MER36MN	inches	40-7/8	41
	millimeters	1038	1041
MER42MN	inches	42-7/8	48
	millimeters	1089	1219

Figure 10.2 Non-combustible Facing Diagram

WARNING! Risk of Overheating! DO NOT *install combustible or non-combustible flooring or hearth material above top of bottom surround. Gap between bottom of decorative front and top of bottom surround must be maintained for proper air flow.*

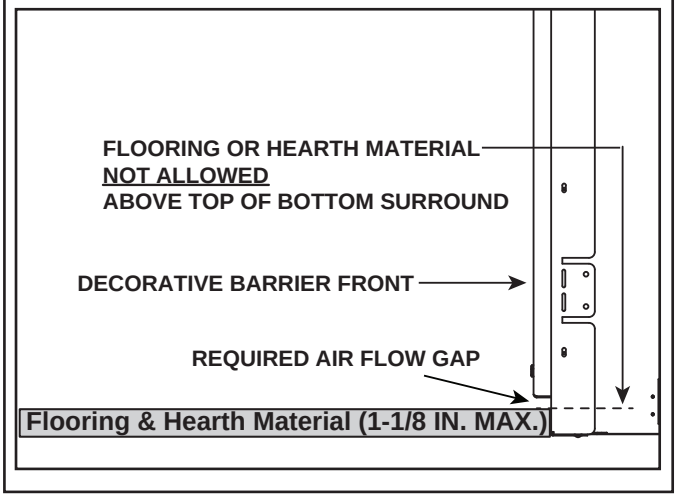

Figure 10.3 Required Air Flow Gap

B. Drywall Installation

Introduction

If the desired finished fireplace installation does not utilize non-combustible finishing materials (such as tile, marble, stone, etc.), special attention must be paid to the installation of drywall/gypsum wallboard to minimize potential development of cracking and paint discoloration. Hearth and Home Technologies has tested the following methods and materials and therefore recommends the following steps for the best drywall performance.

- Refer to section 6.D for more information regarding the included non-combustible board.
- The appliance ships with the required non-combustible board.
- To ensure good adhesion of drywall compounds and tape, thoroughly clean the non-combustible board and surrounding drywall to remove dust. The non-combustible board may be primed with a high-quality PVA primer.

Filling and Finishing Seams

1. **Step 1:** Fill all gaps and joints between the non-combustible board pieces and the drywall with a general purpose chemically setting joint compound such as Durabond® 45 Joint Compound manufactured by USG (Sheetrock® brand), recommended by Hearth & Home Technologies. Use a drywall knife to firmly press the joint compound into all gaps. See Figure 10.1. Allow these joints to dry.
2. **Step 2:** All joints are to be taped with fiberglass mesh tape 1 7/8" minimum width, and embedded with Setting-Type joint compound, such as with Durabond® Joint Compound manufactured by USG (Sheetrock® brand), or equivalent. Allow these joints to dry.
3. **Step 3:** Depending on the technique used in steps 1 and 2, two to three finishing coats are required to provide a smooth and durable finish. Hearth and Home Technologies recommends a lightweight or all-purpose compound. Allow each coat to properly cure. Allow the finishing coat(s) to cure for 24 hours before operating appliance.

NOTICE: *Hearth & Home Technologies recommends using multiple pieces of decorative finish material around the opening of the appliance to reduce the chances of the material cracking. A single piece of decorative finish material (such as marble or granite) is more susceptible to cracking due to uneven heating and cooling which causes temperature differentials within the material itself. The use of multiple pieces will reduce the temperature differentials in each piece and reduce the likelihood of cracks. In addition to using multiple pieces of decorative finish material, the installation of the Passive Heat optional heat management system will also reduce the chances of cracking.*

Painting

If desired finishing includes a painted wall, a high-quality 100% acrylic latex paint with a high-quality latex primer base coat are recommended around the appliance to limit discoloration. Oil-based or standard acrylic paints may be more prone to discoloration due to heat exposure.

Drywall Joint-Crack Prevention and Repair

Drywall joints around the fireplace will be affected by exposure to elevated temperatures, along with other environmental, structural factors due to new construction, and methods used to install and finish the drywall. If a crack does emerge adjacent to the fireplace, it can be permanently repaired by filling it with a paintable latex caulk, followed by repainting.

Some movement of the screws used to secure the non-combustible board to the appliance/surround framing is expected. If a blemish begins to show over a screw head, sand the surface to remove the blemish and repaint.

C. Installing a Television

If installing a television (TV) above the appliance, see Section 2.B.

D. Mantel and Wall Projections

WARNING! Risk of Fire! *Comply with all minimum clearances as specified. Mantel MUST be fastened to wall with no gaps.*

- *Framing closer than the minimums listed must be constructed entirely of non-combustible materials (i.e., steel studs, concrete board, etc.).*
- *No gaps allowed between the wall and the bottom of the mantel.*
- Combustible mantel legs and wall projections may be applied over the non-combustible board supplied with the appliance. Follow guidelines as shown in the figures below for mantels, mantel legs and wall projections.
- Measurement is taken from top/side of the opening, NOT the top/side of the appliance.

Mantel requirements are shown in Figures 10.4-10.9.

Combustible Mantels

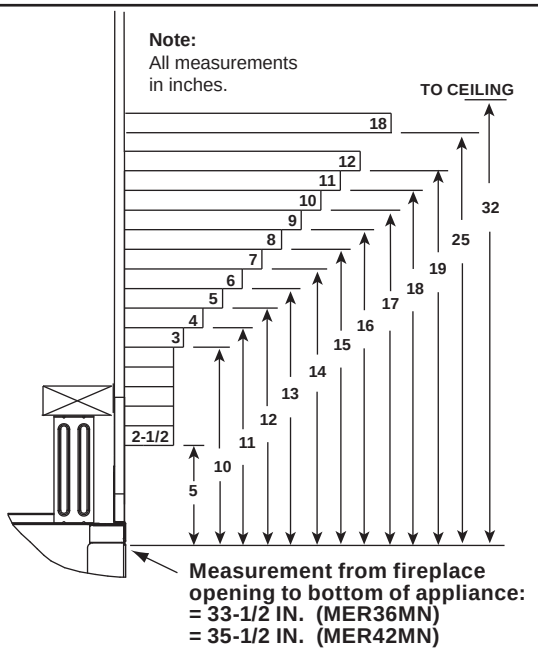

Note: Measurement is taken from top of the opening, NOT the top of the fireplace.

Figure 10.4 Minimum Vertical and Maximum Horizontal Dimensions of Combustibles or Painted Surfaces

Combustible Mantels - Passive Heat Installed

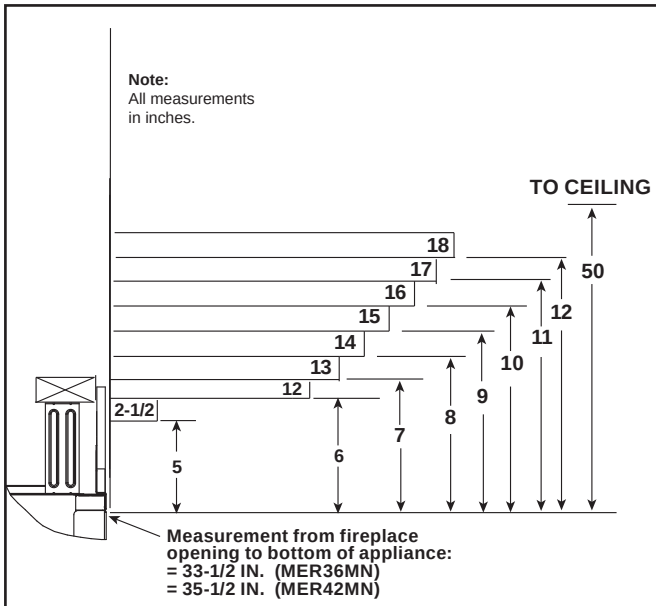

Note: Measurement is taken from top of the opening, NOT the top of the fireplace.

Figure 10.5 Minimum Vertical and Maximum Horizontal Dimensions of Combustibles - Passive Heat Kit Installed

Non-Combustible Mantels

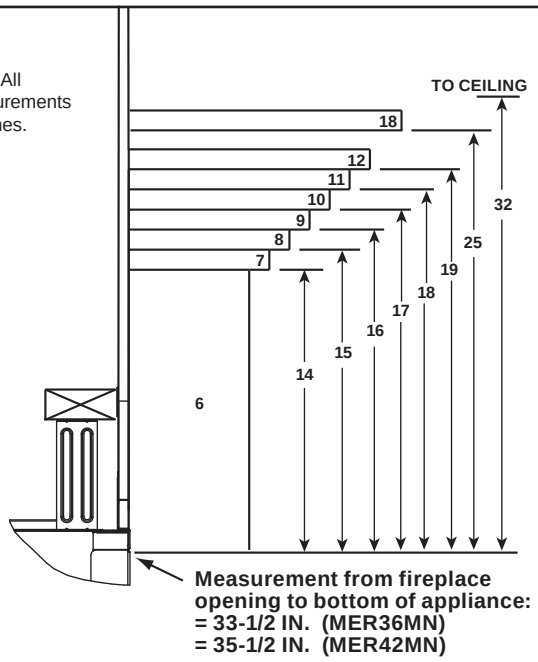

Note: Measurement is taken from top of the opening, NOT the top of the fireplace.

Figure 10.6 Minimum Vertical and Maximum Horizontal Dimensions of Non-Combustibles

Non-Combustible Mantels - Passive Heat Installed

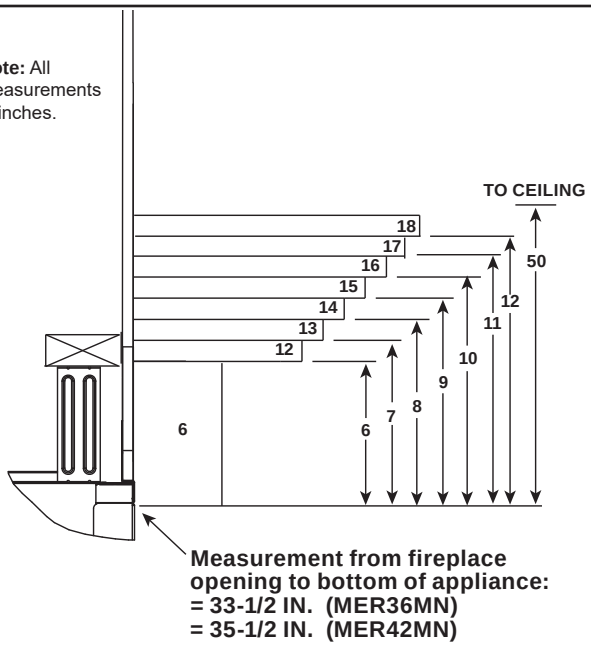

Note: Measurement is taken from top of the opening, NOT the top of the fireplace.

Figure 10.7 Minimum Vertical and Maximum Horizontal Dimensions of Non-Combustibles - Passive Heat Kit Installed

Combustible Mantel Legs or Wall Projections

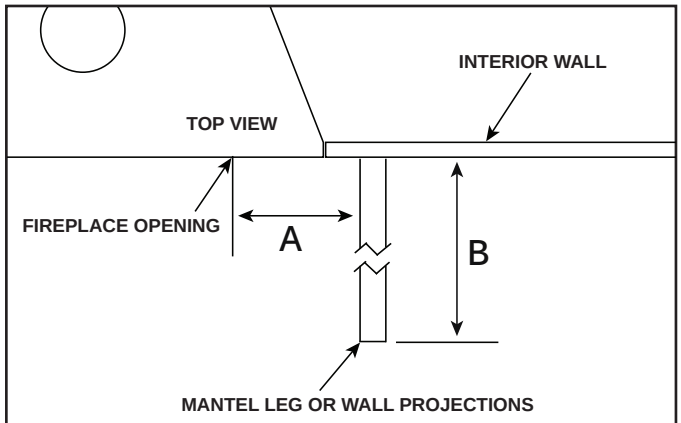

If A minimum is ____, then B maximum is_____.							
A	*Inches*	1-5/16	2-5/16	3-5/16	4-5/16	5-5/16	6-5/16
	Millimeters	33	59	84	110	135	160
B	*Inches*	1	2	3	4	5	∞
	Millimeters	25	51	76	102	127	∞

Figure 10.8 Combustible Mantel Leg or Wall Projections (Acceptable on both sides of opening)

Non-Combustible Mantel Legs or Wall Projections

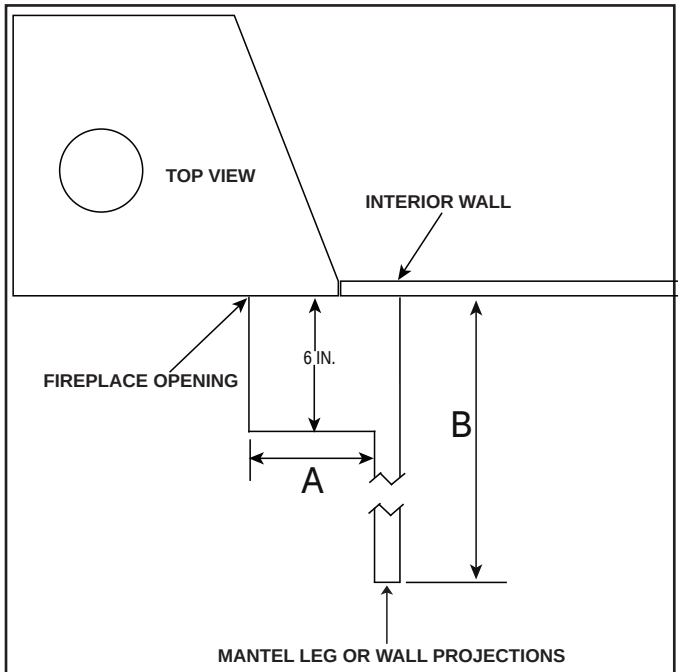

If A minimum is ____, then B maximum is_____.			
A	*Inches*	0-6-5/16	6-5/16
	Millimeters	0-160	160
B	*Inches*	6	∞
	Millimeters	152	∞

Figure 10.9 Non-Combustible Mantel Leg or Wall Projections (Acceptable on both sides of opening)

Finishing Material Installed with Passive Heat Optional Heat Management System

= COMBUSTIBLE MATERIAL ALLOWED

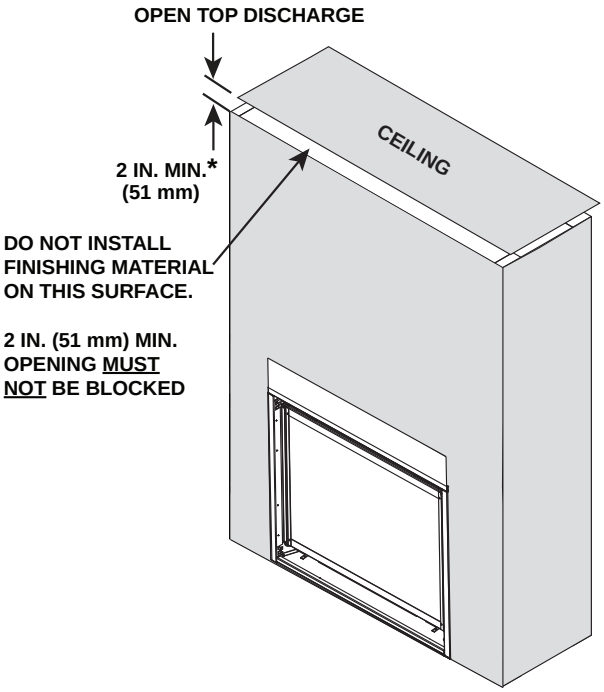

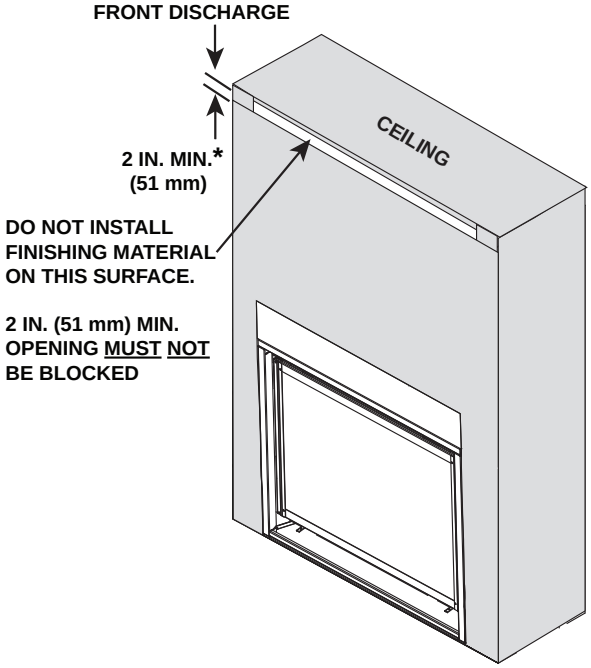

* = Mesh screen required for front discharge or open top discharge passive heat installations with discharge opening of 3 in. (76 mm) or greater.

SIDE DISCHARGE
(DISCHARGE SLOTS ON BOTH SIDES OF APPLIANCE)

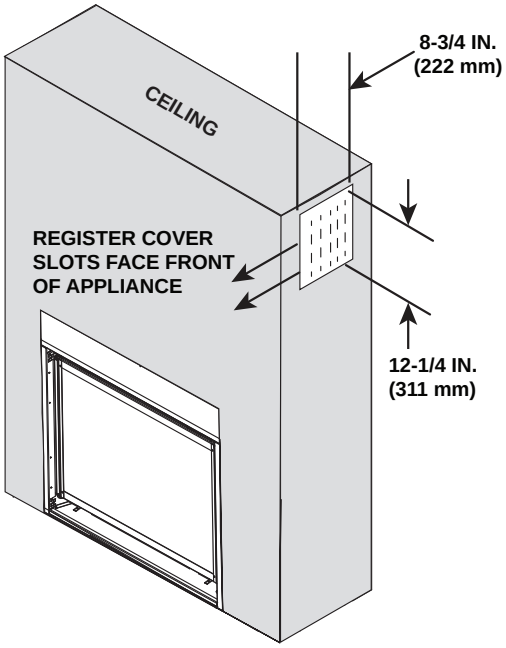

Figure 10.10 Finishing Material installed with Passive Heat Optional Heat Management System

E. Hearth Extension

A hearth extension is not required with these models. Refer to Section 3 for clearances and information regarding vinyl flooring restrictions.

F. Decorative Barrier Front Dimensions for Finishing

Only decorative barrier fronts certified for use with this appliance model may be used. Contact your dealer for a list of decorative barrier fronts that may be used.

Decorative Barrier Front Fit Types

- Inside Fit as shown in Figure 10.12. Decorative barrier front fits inside appliance opening.
- Overlap fit as shown in Figure 10.13. Decorative barrier front is installed on top of finishing material.

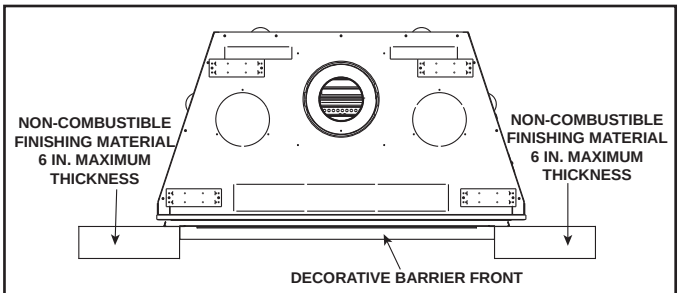

Non-Combustible Finishing material between 1 and 6 in. thick.

Figure 10.11 Inside Fit Decorative Barrier Front

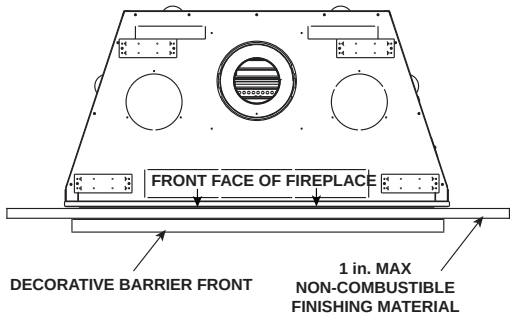

Finishing materials 1 in. maximum thick.
Stop finishing material flush with opening.

Figure 10.12 Overlap Fit Decorative Barrier Front

Decorative Barrier Front Finishing Methods

1. Finish material installed up to appliance opening.

   A. Finish material 1 inch thick or less: Use with Overlap fit fronts. Finishing strips not required. See Figure 10.13.

   B. Finish material 0-6 inch thick: Use this method with Inside fit fronts. Finishing strips not required. See Figure 10.14.

2. Finishing strips required. Shipped with appliance. See Figure 10.16.

   A. Finish material 1-6 inch thick: Use this method with overlap fronts installed as inside fit. See Figure 10.15.

A table showing the fit option (Overlap or Inside) for each available decorative barrier front for this appliance is included for each finishing method (1.A, 1.B, 2.A).

1. A Overlap Fit Method with Overlap Fit Front

FINISHING STRIPS NOT REQUIRED
Non-combustible Finishing Material Thickness:
1 Inch Thick or Less

DECORATIVE BARRIER FRONT	FIT OPTION
MANOR	Overlap
ENSEMBLE	Overlap
VENTURA	Overlap

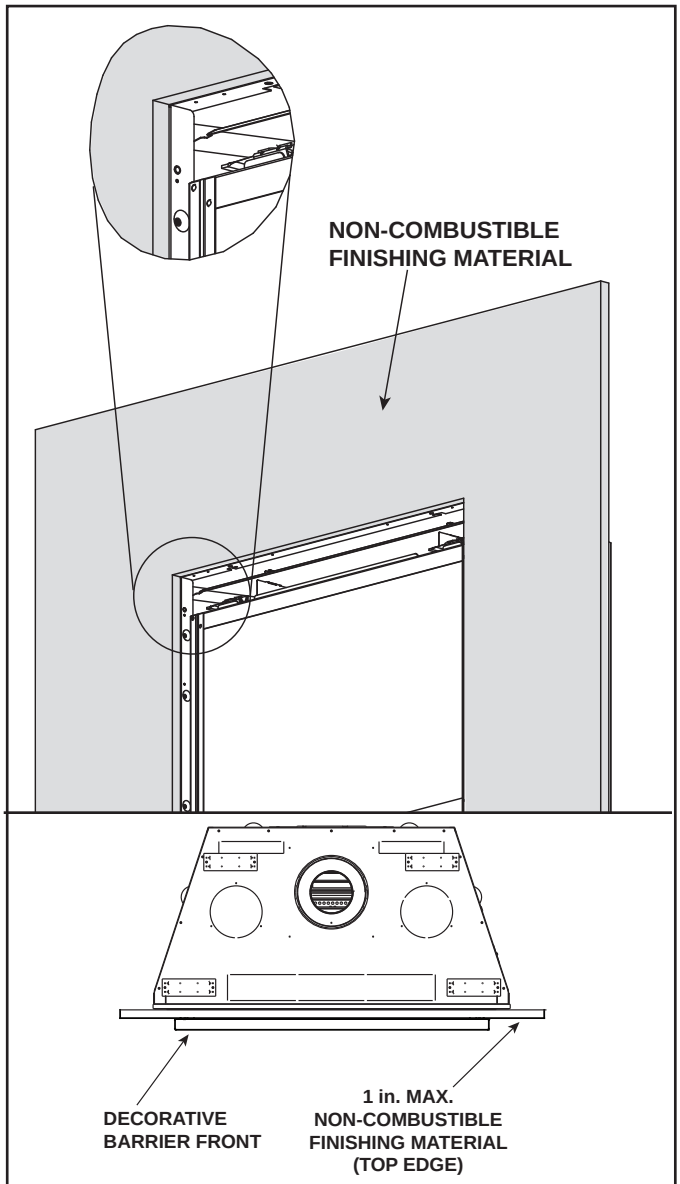

Non-Combustible Finishing materials 1 inch maximum thickness.
Stop finishing material flush with appliance opening.

Figure 10.13 Non-Combustible Finishing Material 1 Inch Thick or Less - Overlap Fit Fronts

1. B Inside Fit Method with Inside Fit Front

FINISHING STRIPS NOT REQUIRED
Non-Combustible Finishing Material Thickness:
0-6 Inches Maximum

DECORATIVE BARRIER FRONT	FIT OPTION
ESSENCE	Inside

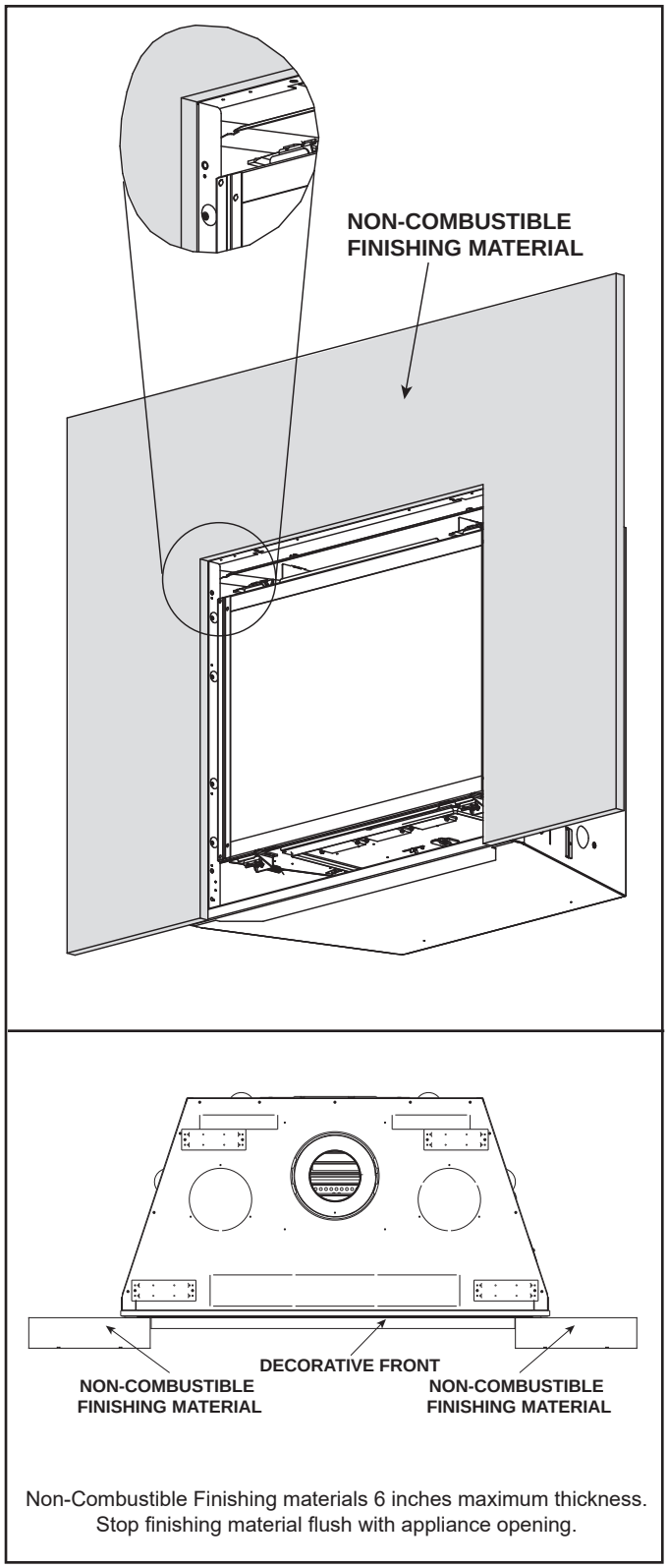

Non-Combustible Finishing materials 6 inches maximum thickness.
Stop finishing material flush with appliance opening.

Figure 10.14 Inside Fit Method

2.A Inside Fit Method with Overlap Fit Front FINISHING STRIPS REQUIRED Non-Combustible Finishing Material Thickness: 1-6 Inches Maximum

Finishing strips will add the proper clearances for the installation of the front.

DECORATIVE BARRIER FRONT	FIT OPTION
MANOR	Inside
ENSEMBLE	Inside
VENTURA	Inside

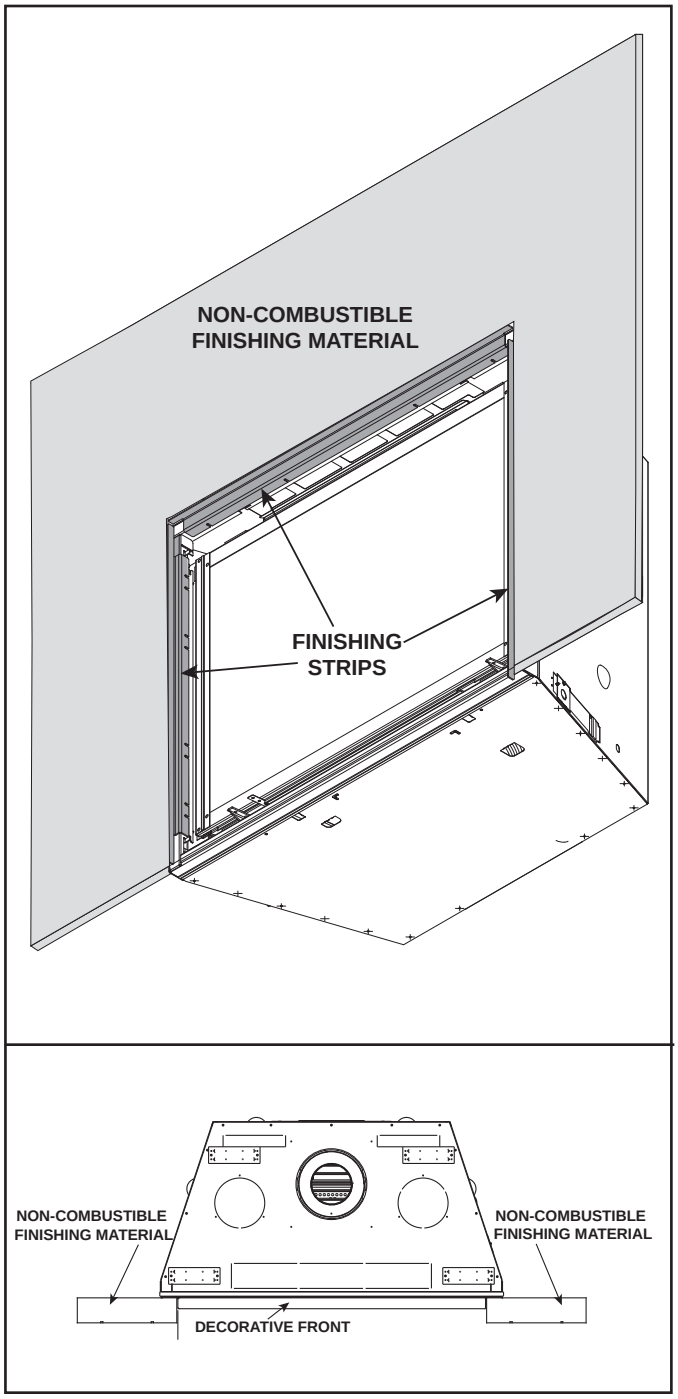

Figure 10.15 Non-Combustible Finishing Material Thickness Greater Than One Inch - Finishing Strips Required

Install and Remove Finishing Strips

1. Align finishing strip with the two pre-drilled holes on the appliance top and sides as shown in Figure 10.16.
2. Install screws to attach finishing strips.
3. To remove the finishing strips, remove screws.

Finishing strips will add the proper clearances for the installation of the front.

NOTICE: *Remove finishing strips before firing appliance. Remove glass assembly to access finishing strip screws.*

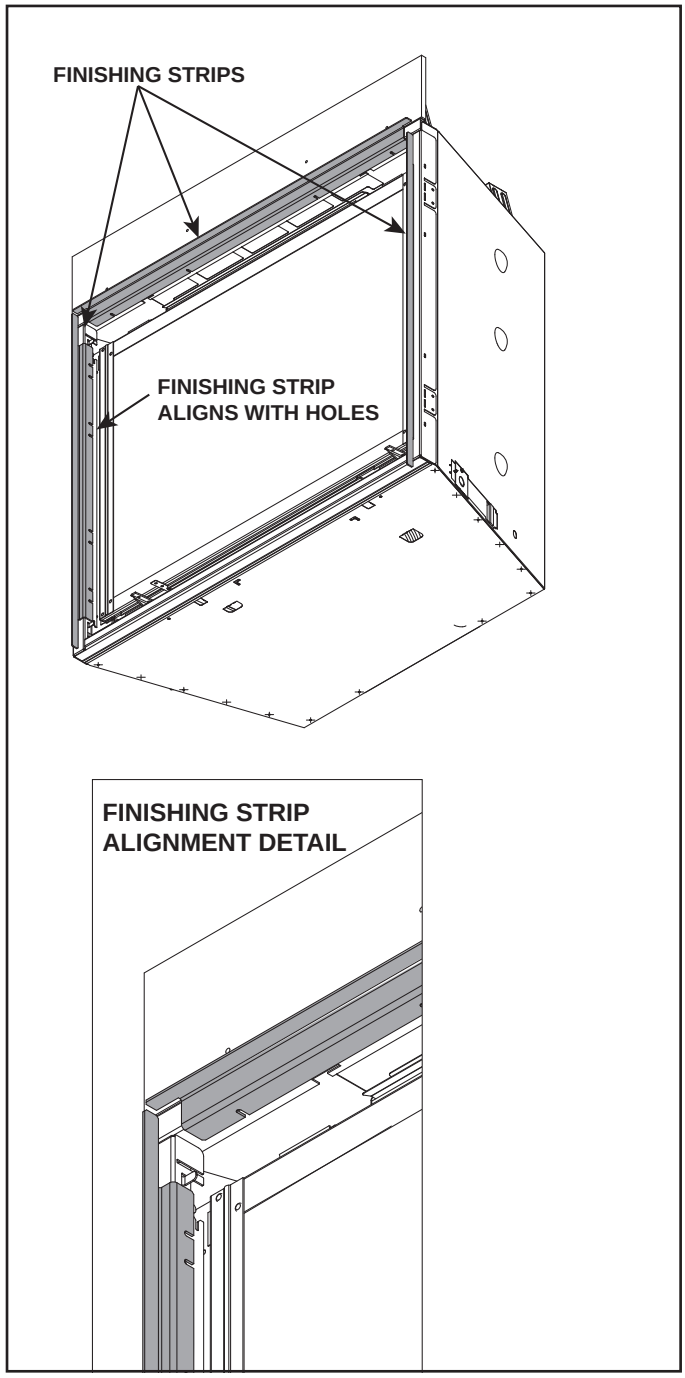

Figure 10.16 Install Finishing Strips

Good Faith Guidelines for TV Installations Above a Fireplace with Passive Heat Option

WARNING! Risk of Fire! *Wire mesh required on bottom of discharge opening when discharge opening is greater than 3 inches. Secure wire mesh to top of framing.*

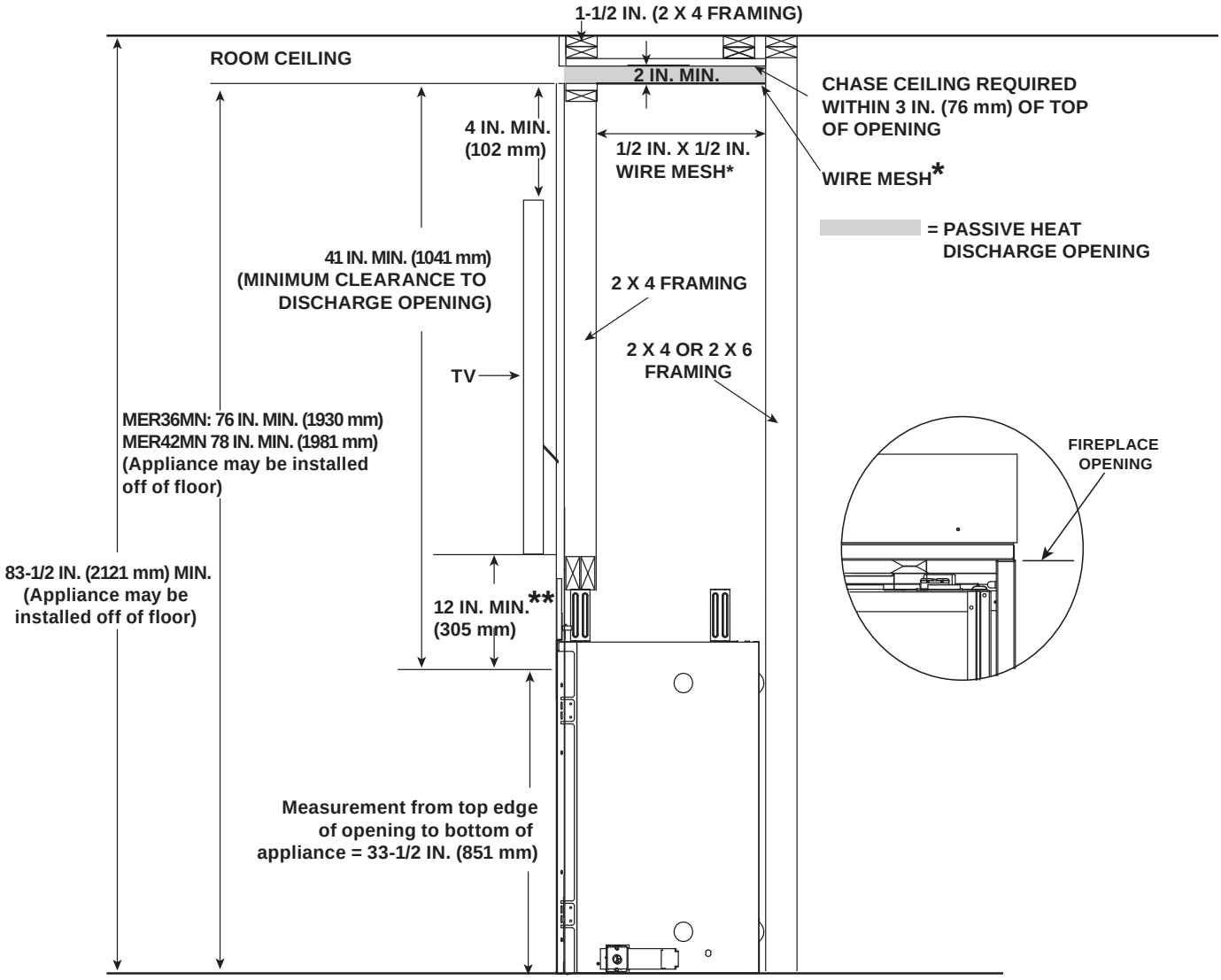

* Wire mesh required for front discharge or open top discharge passive heat installations with discharge opening of three inches or greater.

** For information on mantel requirements, refer to Section 2.B (Good Faith TV Guidelines for TV Installations) and Section 10.C (Mantel and Wall Projections). If a fan is installed, a mantel is required to maintain the Good Faith guidelines for TV installation. See Section 2.B and Section 2.C.

NOTE: The TV installation requirements are the same regardless of whether the Passive Heat kit is installed with a top discharge, side discharge or open top discharge.

Figure 10.17 Good Faith Guidelines for TV Installations Above a Fireplace with Passive Heat Option

11 Appliance Setup

A. Remove the Shipping Materials

WARNING! Risk of Fire! *Close the ball valve before installing the splatter guard to prevent accidental lighting. Remove the splatter guard before lighting the appliance.*

Remove shipping materials from inside or underneath the firebox.

- Finishing strips are also shipped with this appliance. Remove from shipping location. Do not discard. Depending on the decorative barrier front and finishing method chosen, finishing strips may be required. See Section 10.E.
- The splatter guard is a piece of corrugated material used to protect the appliance during the installation process before finishing work on the whole hearth is complete. Splatter guards are factory installed on these models. Splatter guards must be removed before appliance is fired.

B. Clean the Appliance

Clean/vacuum any sawdust that may have accumulated inside the firebox or underneath in the control cavity.

C. Install Black Glass Refractory

1. Check area behind basepan to ensure it is clear of media or other objects.
2. The three glass panels are shown in Figure 11.1. Note that the left and right panels are different and not interchangeable. Panels are reversible. Choose black reflective or matte finish side for installation.
3. Install back panel by placing it in position at back of firebox. Hold panel in place and install glass retainer with one self-tapping screw. Hold glass panel in place until glass retainer is securely holding glass panel.
4. Install left and right side panels using same method.
5. Clean glass as instructed in appliance Owner's manual.

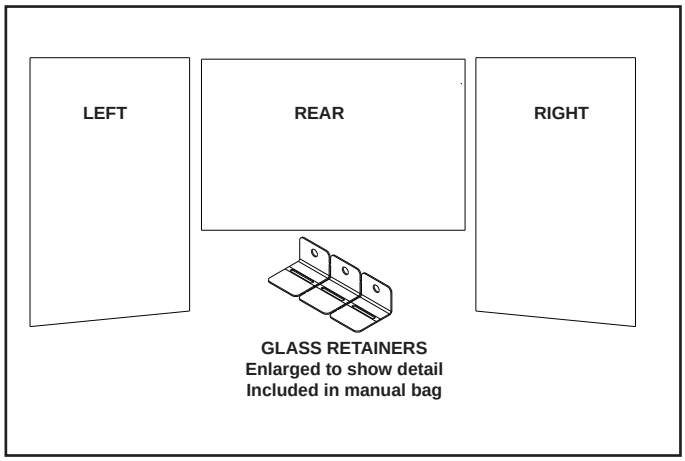

Figure 11.1 Black Glass Refractory Components

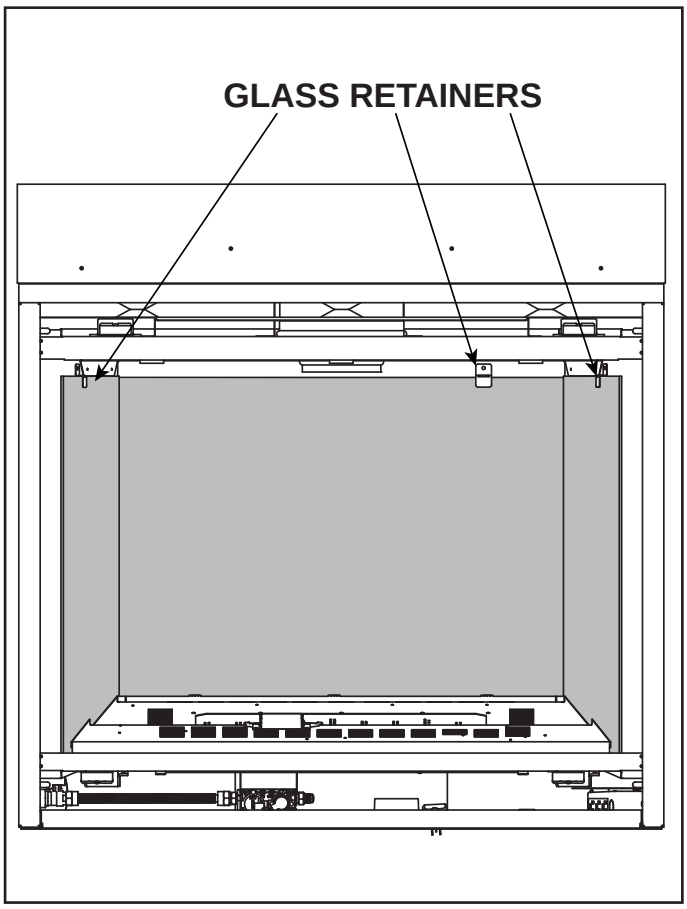

Figure 11.2 Glass Retainer in Position

D. Install Driftwood Logs (Optional)

LOG PLACEMENT INSTRUCTIONS

Log Set Assembly: LOGS-KMOD

Models: 6KMOD, 8KMOD, MER36MN, MER42MN

Leave this manual with party responsible for use and operation.

CAUTION: *Logs are fragile, handle with care.*

NOTICE: To simplify the installation process, positively identify each individual log before beginning installation. See Figure 1.

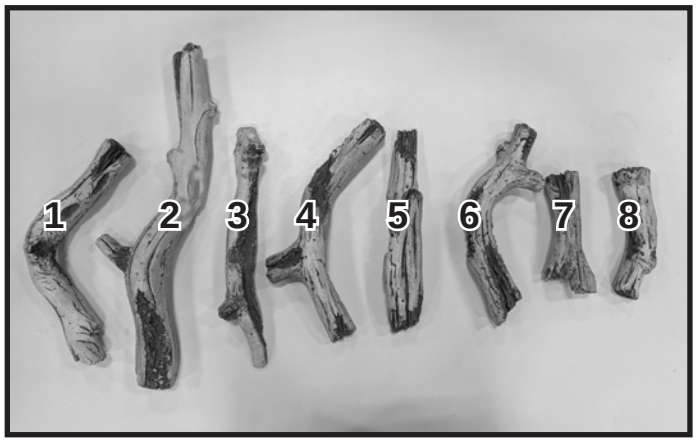

Figure 1 Log Identification

Installation

1. Fill round holes with included log pins as indicated in Figure 2. Discard remaining log pins. Figure 3 shows the log pins in the round holes.

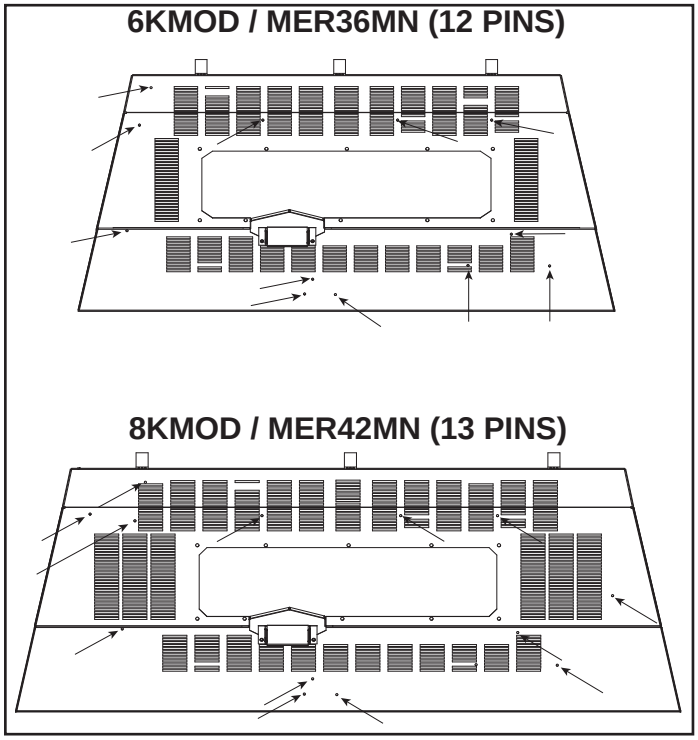

Figure 2 Locations for Log Pins

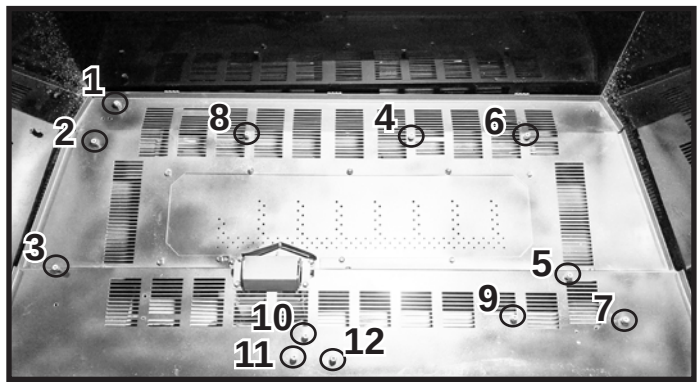

Figure 3 Log Pins Installed (6KMOD / MER36MN Base Pan Shown)

Log #1: Place Log #1 using the #4 and #6 log pins as guides as shown in Figure 4. The left end of the log will align with the burner screw as shown in the top view illustrated in Figure 5.

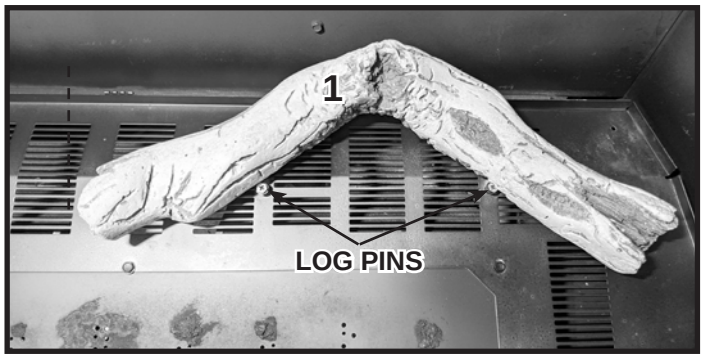

Figure 4 Place Log #1

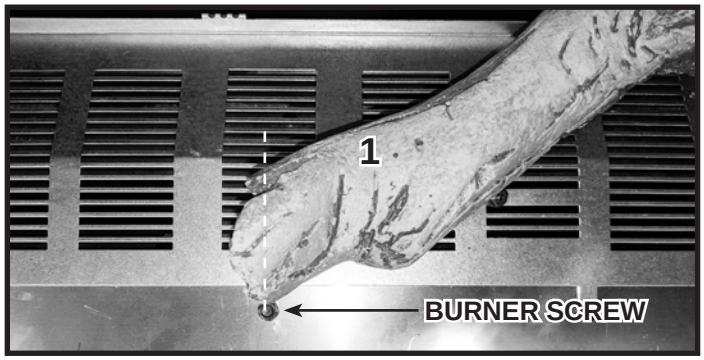

Figure 5 Top View of Log #1 in Position

Log #2: Place the knot on the right end of Log #2 the left end of Log #1 as shown in Figure 7. Log Pin 1 touches the left end of Log 2. See Figure 6.

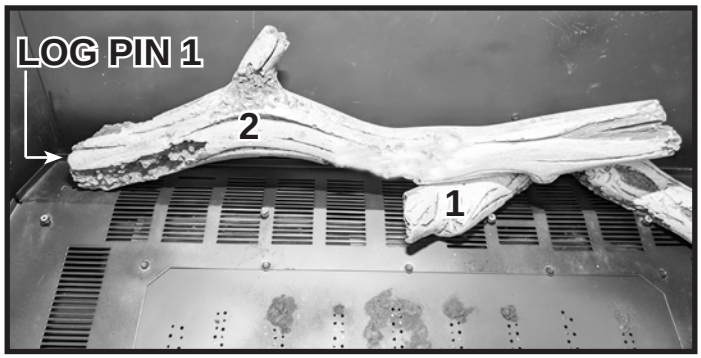

Figure 6 Place Log #2

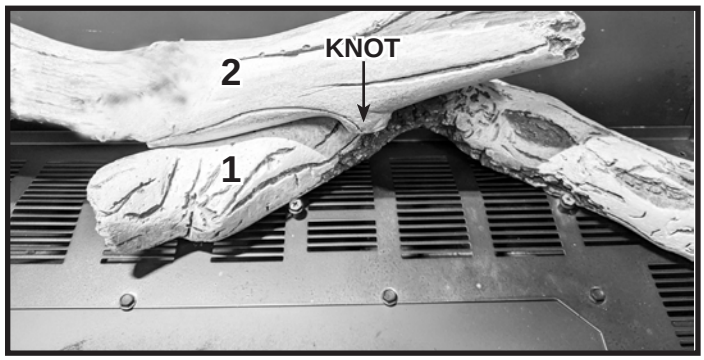

Figure 7 Knot on Log #2

Log #3: Place the right end of Log #3 against Log Pin #8 as shown in Figure 8. Rotate the left end of Log #3 clockwise until it touches Log Pin #3.

Log #4: Place the right end of Log #4 with Log Pins #10 and #11 as shown in Figure 9. Rest the left end of Log #4 on the notch on Log#3 shown in Figure 8.

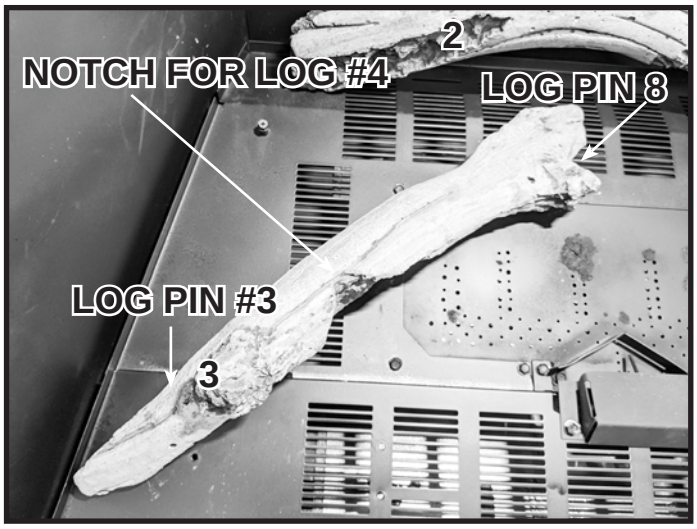

Figure 8 Place Log #3

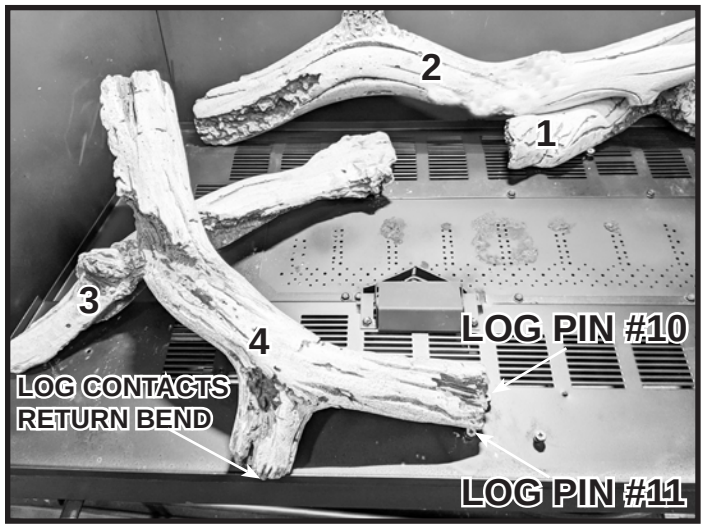

Figure 9 Place Log #4

Log #5: Place the left end of Log #5 with the pin as shown in Figure 10. Rotate the right end of Log #5 counter clockwise until it contacts Log Pin #9.

Log #6: Place the bottom end of Log #6 using Log Pin #5 and Log Pin #7 as a guide. Set the top end of Log #6 on Log #1 as shown in Figure 11.

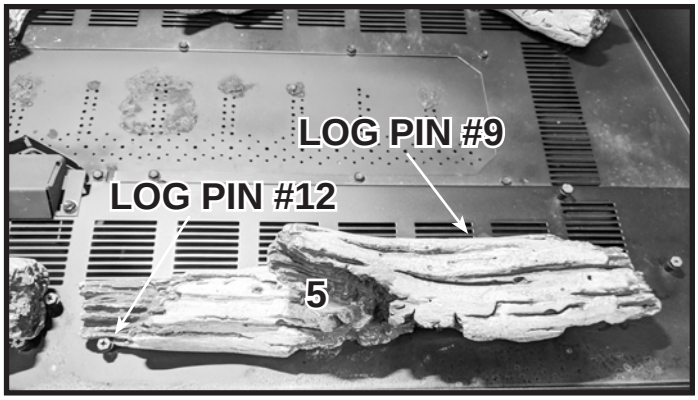

Figure 10 Place Log #5

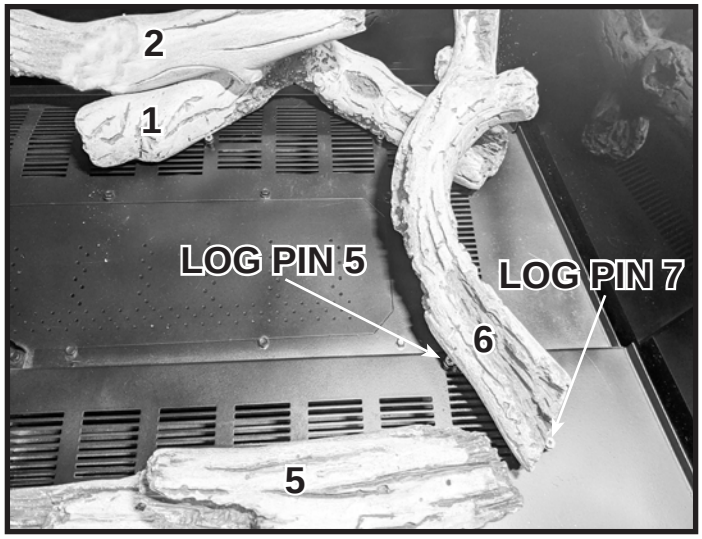

Figure 11 Place Log #6

Log #7: Place Log #7 as shown in Figure 12. The forked end rests on the base pan.
8KMOD / MER42MN models only: See Figure 15 for additional details.
Log #8: Place Log #8 as shown in Figure 13. The small end rests against Pin #2.
8KMOD / MER42MN models only: See Figure 15 for additional details.

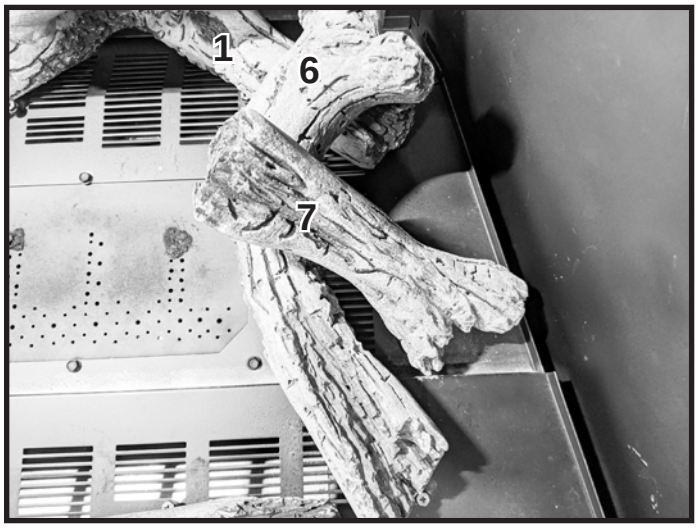

Figure 12 Place Log # 7

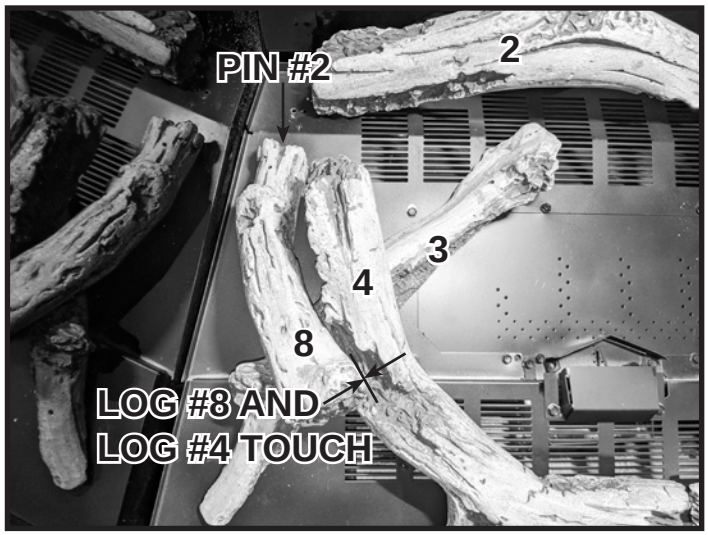

Figure 13 Place Log #8

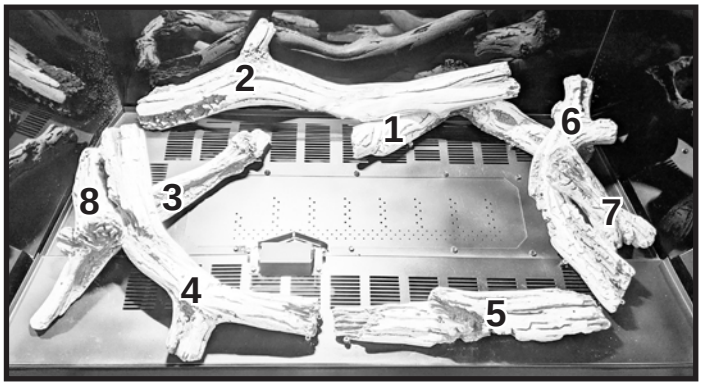

Figure 14 6KMOD / MER36MN Shown - Base Pan Shown Unpainted

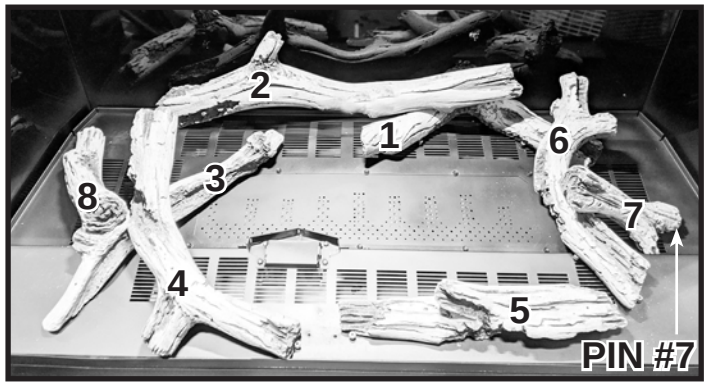

Figure 15 8KMOD / MER42MN Shown - Base Pan Shown Painted
Note Log #7 & # 8 Positions

2584-935

E. Install Glass Media

WARNING! Choking Hazard! *Keep media out of reach of children.*

Glass media is required to operate this appliance and must be ordered separately at time of appliance purchase. Install glass media as instructed.

Additional colors are available. Contact your dealer to order.

1. The number of bags of media needed varies by appliance size. See Table 1. When using multiple media colors, mix them prior to installation. For optional performance and flame appearance, ensure the media is spread evenly.

Model	Bag Quantity (5 lbs/bag)	
MER36MN	2	10 lbs
MER42MN	2-1/2	12-1/2 lbs

Table 1

⚠ WARNING

Risk Of Explosion.

- Place media according to instructions.
- Do NOT place media in a position that they may fall into area in front of pilot.

- Do NOT use any media other than the media supplied with this appliance.
- Do NOT exceed one layer of media on base pan.

Fireplace will not function properly. Delayed ignition could occur.

2. Spread the media as shown in Figure 11.3. Do NOT remove media bracket. See Figure 11.4.

WARNING! Risk of Explosion! DO NOT *remove media bracket. Delayed ignition could occur. Flame performance wlll be affected.*

NOTICE: *Excess media on burner and base pan may cause sooting. One thin layer of media may require less media than indicated in the Table 1.*

⚠ WARNING

Risk Of Asphyxiation Or Fumes.

- Place media according to instructions.

- Do NOT place media in area between glass and firebox.
- Do NOT place media in a position that they may fall into area between glass and firebox.
- Do NOT use any media other than the media supplied with this appliance.
- Do NOT exceed one layer of media on base pan.

Fireplace will not function properly.

Gas leak could occur.

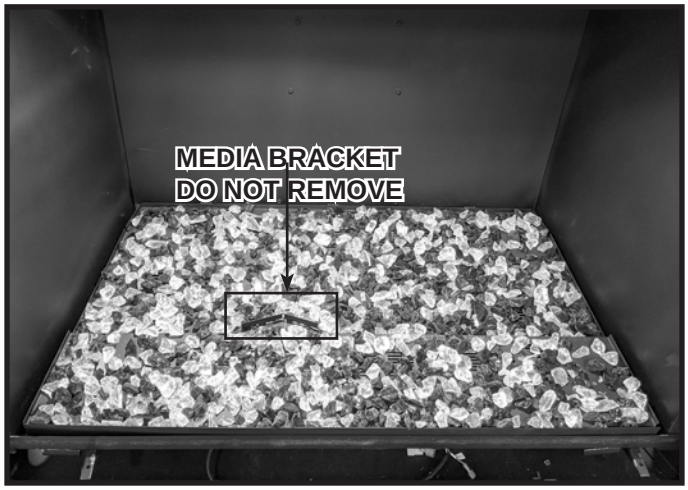

Figure 11.3 Placement of Glass Media

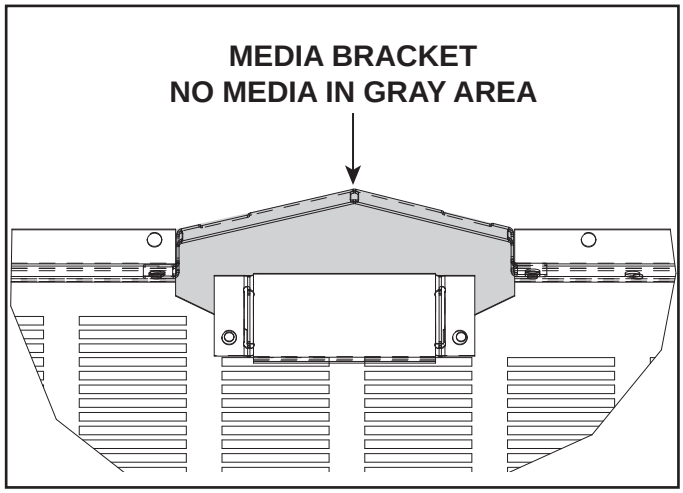

Figure 11.4 Media Bracket Location

3. If installing an optional rock/stone kit, refer to the instructions in section 11.F.
4. Install glass assembly according to instructions in Section 11.H.
5. Install decorative barrier front according to instructions included with front.
6. Reconnect electrical supply and turn on gas.

Note: A tall, deep orange flame should be avoided; this type of flame may cause increased soot residue. If this type of flame is noticed, try adjusting the media directly beneath the flame. If all flames appear to be tall and deep orange in color, then open the primary air shutter.

⚠ WARNING

Risk Of Explosion.

- Place media according to instructions.
- Do NOT place media in a position that they may fall into area in front of pilot.
- Do NOT use any media other than the media supplied with this appliance.
- Do NOT exceed one layer of media on base pan.

Fireplace will not function properly. Delayed ignition could occur.

⚠ WARNING

Risk Of Asphyxiation Or Fumes.

- Place media according to instructions.
- Do NOT place media in area between glass and firebox.
- Do NOT place media in a position that they may fall into area between glass and firebox.
- Do NOT use any media other than the media supplied with this appliance.
- Do NOT place media on base pan in excess of the amount of media directed in Table 1.

Fireplace will not function properly.

Gas leak could occur.

***NOTICE:** Flames should not appear orange or stretch to the top of firebox. If flames are dark orange with dark, smoky tips, provide more primary air to the burner by opening the air shutter accordingly.*

F. Install Rock Jig for Optional Rock Media (STONES-NATURAL)

An optional rock media kit is available for use with these models. The rock jig, included in the manual bag assembly, must be used for proper placement of the optional rock media. Table 2 shows the number of bags included in the kit.

1. Bend tab on rock jig down as shown in Figure 11.5.
2. Place rock jig on glass media with lasered text “ROCK JIG” facing up. Ensure that the rock jig sits flush against the pilot bracket. See Figure 11.6.

Note: Rock jig must be in place prior to installation of stones.

2. Place rocks in a random manner around the rock jig as shown in Figure 11.7.
3. Remove rock jig.

   Consumer: Retain rock jig for future maintenance or service needs.

Model	Kit Name	Kit Quantity
MER36MN	STONES-NATURAL	3
MER42MN	STONES-NATURAL	3

Table 2

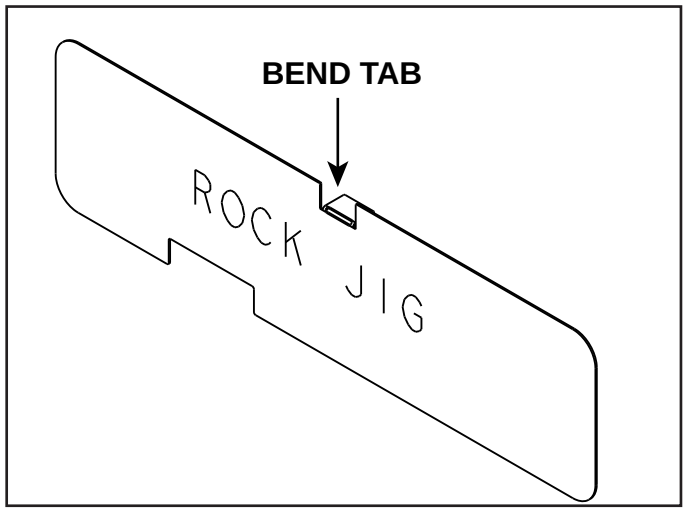

Figure 11.5 Bend Tab on Rock Jig

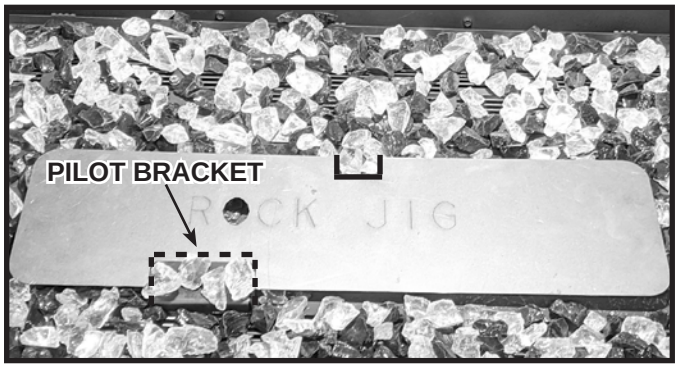

Figure 11.6 Place Rock Jig

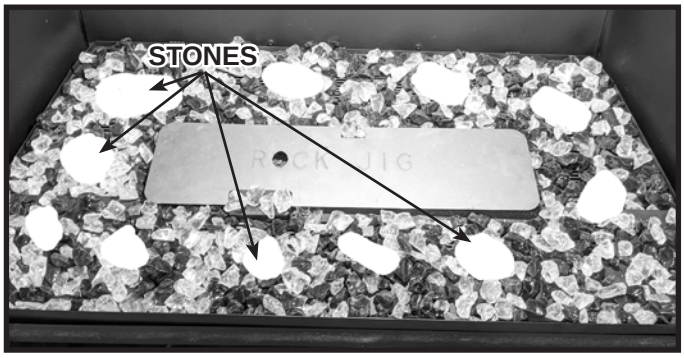

Figure 11.7 Place Rocks

G. IntelliFire Touch® Control System Setup

- Detailed instructions for electrical wiring and connections are provided in Section 8.
- Verify that the 3-Position switch on the IFT-ECM is switched to the REMOTE position. Detailed Operating Instructions for the IFT-ECM are provided in Section 3.K of the Owner's Manual.

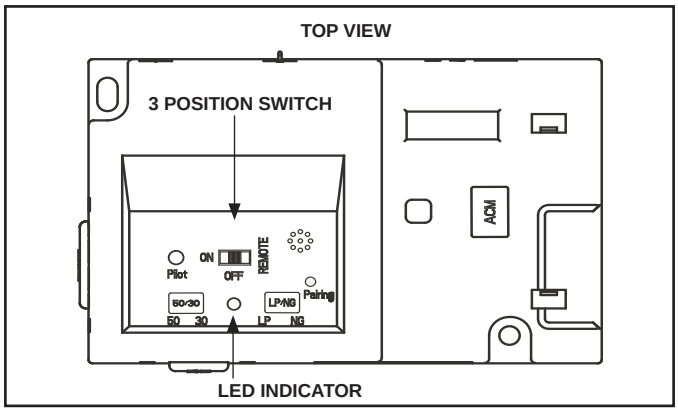

Figure 11.8 IFT-ECM

If this appliance is being upgraded to an optional IntelliFire Touch Remote Control, and/or an optional power vent or optional fan are added as new accessory upgrade(s) to fireplace:

1. The RC400 remote will need to be paired to the ECM.
2. Follow the installation instructions provided with the IntelliFire® Touch remote and/or accessory kit(s).

H. Fixed Glass Assembly Removal and Replacement

WARNING! Risk of Asphyxiation! *Handle fixed glass assembly with care. Inspect the gasket to ensure it is undamaged and inspect the glass for cracks, chips or scratches.*

- ***DO NOT*** *strike, slam or scratch glass.*
- ***DO NOT*** *operate fireplace with glass removed, cracked, broken or scratched.*
- *Replace as a complete assembly.*

Removing Fixed Glass Assembly

- Pull the four glass assembly latches away from the tabs on the glass frame. Remove glass assembly from the appliance. See Figure 11.9.

Replacing Fixed Glass Assembly

- Replace the glass assembly on the appliance. Hold glass in place with one hand. Use the other hand to pull out and latch the four glass assembly latches onto the glass frame tabs.
- Inspect and operate all glass latches to ensure they move freely and no obstructions are present.
- Reinstall decorative barrier front.

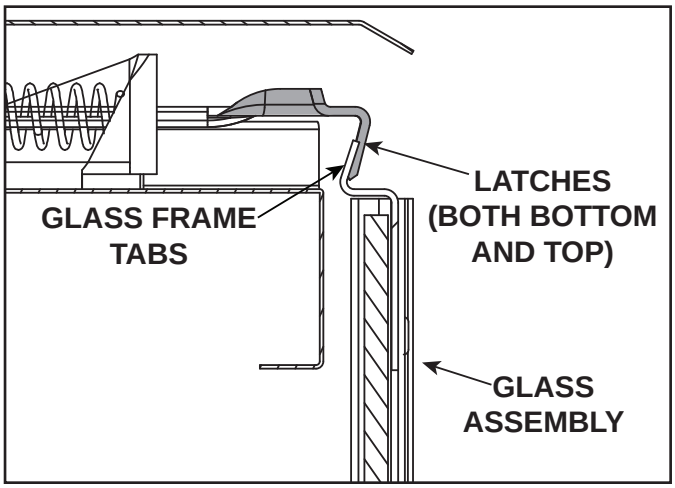

Figure 11.9 Fixed Glass Assembly

I. Install Decorative Barrier Front

WARNING! Risk of Fire! *Install ONLY decorative barrier fronts approved by Hearth & Home Technologies. Unapproved decorative barrier fronts could cause fireplace to overheat.*

IMPORTANT! This fireplace requires an installed decorative barrier front to prevent direct contact with the hot viewing glass. DO NOT operate the fireplace with the barrier removed.

Contact your dealer or Hearth & Home Technologies if the barrier is not present or help is needed to properly install one.

For more information refer to the instructions supplied with your decorative barrier front.

12 Reference Materials

A. Approved Vent Components List

Vent components on this list are approved for use with these models.

Scan QR code or click on the link to access document including dimensions and effective lengths of vent components.

Vent Components

DVP Vent Components			
DVPXX	DVP Vent Pipe (4/6/8/12/24/36/48 Inch)	DVP6A/DVP12A	6 Inch/12 Inch DVP Slip Section
DVP45	45 Degree Elbow	DVP-TVHW	Vertical Termination Cap (High Wind)
DVP90ST	90 Degree Elbow	DVP-HPC	High Performance Cap
DVP-HVS	Vent Support	DVP-BEK2	DVP-HPC Cap Brick Extension
DVP-RDS	Roof Deck Insulation Shield	COOL-ADDM	Cap Shield
DVP-WS	Wall Shield Firestop	DVP-TB1	Basement Vent Cap
DVP-FS	Ceiling Firestop	DRC-RADIUS	Cap Shield
DVP-TRAP	Horizontal Termination Cap (DVP-TRAP1/2/K1/K2/HPC1/HPC2)	DVP-HRC-SS	High Rise Cap
RF6 / RF12	Roof Flashings	DVP-HRC-ZC-SS	Zero Clearance High Rise Cap
DVP-TRAPFL	Flashing	TRAP-VSS	Vinyl Siding Shield
DVP-HSM-B	Extended Heat Shield	UNIV-AS2	Universal Attic Shield
SLP Vent Components			
SLPXX	SLP Vent Pipe (4/6/12/24/36/48 Inch)	SLP6A/SLP12A	SLP Adjustable Pipe Sections
SLP45	45 Degree Elbow	SLP-CCS-BK	Cathedral Ceiling Support Box-Black
SLP90	90 Degree Elbow	SLP-DCF-BK	Ceiling Firestop Black
DVP-SLP24	Adapter	SLP-WT-BK	Wall Thimble Black
SLK-SNKD	Snorkel Termination Cap	SLP-RDS	Roof Deck Insulation Shield
SLP-TVHW	Vertical Termination Cap	SLP-FS	Ceiling Firestop
SLP-TB1	Basement Vent Cap	SLP-WS	Wall Shield Firestop
SLP-HVS	Horizontal Pipe Support	DVP-2SL	Adapter
SLP-TRAP	Horizontal Termination Cap (TRAP1/2)	DVP-HSM-B	Extended Heat Shield
SL-2DVP	Adapter	SLP-HRC-SS	Horizontal Termination Cap
SLP-HHW2	Horizontal High Wind Termination Cap		
Power Vent Components			
PVV-SLP	Vertical Power Vent	PVLP-SLP	Power Vent Low Profile
PVI-SLP-B	Power Vent Inline	SLP-LPC	SLP Low Profile Cap
Decorative Terminations / Shrouds			
Only use listed decorative termination caps/shrouds with Hearth & Home Technologies approved venting systems. This applies to both DVP and SLP venting systems.			
DTO134	Octagon Decor Cap	LDS33	Decor Shroud 36 x 36
DTO146	Octagon Decor Cap	LDS46	Decor Shroud 48 x 72
DTS134	Square Decor Cap	LDS-BV	Decor Shroud 26 x 26
DTS146	Square Decor Cap		

B. Accessories

WARNING! Risk of Fire and Electric Shock! *Use ONLY Hearth & Home Technologies-approved optional accessories with this appliance. Using non-listed accessories could result in a safety hazard and will void the warranty.*

Contact your dealer for more information and details, such as color options and specific quantities required, on individual accessories. A qualified service technician must install the approved accessories. Operate installed accessories according to the included instructions.

Note: Some optional accessories must be installed at the time of appliance installation. See Section 2.A.

Options:

Remote Controls, Wall Controls and Wall Switches	
IFT-RC150-MAJ	IntelliFire Touch wireless wall switch
IFT-RC400	IntelliFire Touch remote control
IntelliFire Wi-Fi module with IntelliFire App	
IFT-WFM	IntelliFire Wi-Fi module for app
Heat Management Systems Kits	
HEAT-OUT-GAS	Heat-Out-Gas
HEAT-ZONE-GAS	Heat-Zone-Gas
HZMR-ADP	Heat Zone Adapter
PH-MR	Passive Heat-Front, Side or Top Discharge
PH-SIDETRIM	Passive Heat registers for side discharge (requires PH-MR)
PH-FRTTRIM-36, PH-FRTTRIM-42	Passive Heat registers for front discharge (requires PH-MR)
Glass Media (Required to Complete)	
MEDIA-CP (5 lb bag)	Crushed glass media - Copper
MEDIA-CY (5 lb bag)	Crushed glass media - Crystal
MEDIA-GT (5 lb bag)	Crushed glass media - Graphite
MEDIA-SM (5 lb bag)	Crushed glass media - Smoked Embers
Stone Media	
STONES-NATURAL	
Log Sets	
LOGS-KMOD	
Fan	
GFK-160A	

Majestic, a brand of Hearth & Home Technologies
7571 215th Street West, Lakeville, MN 55044
www.majesticproducts.com

Please contact your Majestic dealer with any questions or concerns.
For the location of your nearest Majestic dealer,
please visit www.majesticproducts.com.

Printed in U.S.A. - Copyright 2026