VFC Vent Free Fireplace System Installation & Operating Instructions

Models: VFC24C, VFC24L, VFC32C & VFC32L

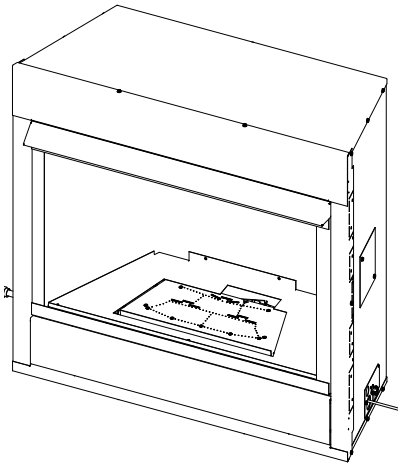

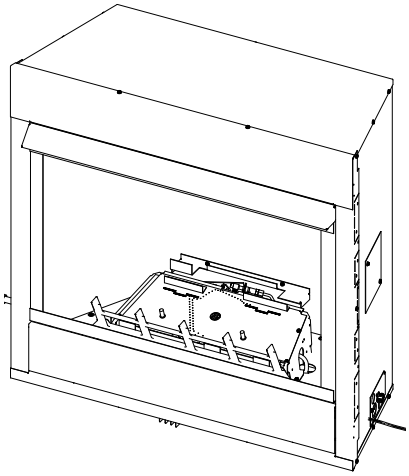

⚠WARNING: If the information in this manual is not followed exactly, a fire or explosion may result causing property damage, personal injury or loss of life.

- **Do not store or use gasoline or other flammable vapors and liquids in the vicinity of this or any other appliance.**
- **WHAT TO DO IF YOU SMELL GAS**
  - **Do not try to light any appliance.**
  - **Do not touch any electrical switch; do not use any phone in your building.**
  - **Leave the building immediately.**
  - **Immediately call your gas supplier from a neighbor's phone. Follow the gas supplier's instructions.**
  - **If you cannot reach your gas supplier, call the fire department.**
- **Installation and service must be performed by a qualified installer, service agency or the gas supplier.**

This is an unvented gas-fired heater. It uses air (oxygen) from the room in which it is installed. Provisions for adequate combustion and ventilation air must be provided. Refer to *Page 8.*

INSTALLER: Leave this manual with the appliance.
CONSUMER: Retain this manual for future reference.

Thank you and congratulations on your purchase of a Monessen Fireplace.

PLEASE READ THE INSTALLATION AND OPERATION INSTRUCTIONS BEFORE USING THE APPLIANCE.

IMPORTANT: Read all instructions and warnings carefully before starting installation.

Failure to follow these instructions may result in a possible fire hazard and will void the warranty.

Important Safety Information 3
Codes 4
Product Features 5
Operation 5
Gas Pressures 5
Gas Specifications and Orifice Sizes 5
Ignition Controls 5
Pilot 5
Thermal Generator 5
Cold Climate Option 6
Fireplace And Framing Dimensions 7
Pre-Installation Information 8
Getting Started 8
What You Will Need For Installation 8
Adequate Combustion and Ventilation Air 8
Fireplace Installation 9
Fireplace Location 9
Clearances 10
Framing and Anchoring 11
Securing Heater to Floor or Hearth 11
► **Gas Line And Pressure 12**
Connecting the Gas Line 13
Checking Gas Pressure – Millivolt 13
Check Gas Pressure – IPI 14
Final Installation 14
Remove Screen 14
Install Canopy 14
Electrical Wiring – Millivolt 15
Connect Optional Wall Switch or Thermostat 15
Connect Remote Receiver 16
Check System Operation 16
Operating Instructions – Millivolt 17
For Your Safety Read Before Lighting 17
What to do if You Smell Gas 17
Lighting Pilot For the First Time 17
Lighting Pilot 18
Lighting Burner 19
To Turn Off Gas 19
Electrical Installation – Ipi 20
Electrical Wiring 20
Junction Box Wiring 20
Wall Switch Installation 21
IPI System Wiring Diagram 21
Operating Instructions – Ipi 22
Operations and Indications 22
For Your Safety Read Before Lighting 23
What to do if You Smell Gas 23
Operating Instructions 23
To Turn Off Gas to Appliance 23
Electrical Wiring – Fan 24
Log And Media Placement 25
Cast Iron Grate Installation 25
Rock Wool Placement 25
Log Placement (VFC24L/VFC32L Only) 26
Glass Only Placement 27
Flame Appearance 28
Pilot and Burner Flame Appearance 28
Checking the Pilot Flame 28
Checking Burner Flame 29
Operating Instructions 29
Operating Instructions 30
For Your Safety Read Before Lighting 30
What to do if You Smell Gas 30
Millivolt/Thermostat Control Lighting Instructions 31
To Turn Off Gas to Heater 31
Match Lighting Instructions 32
Blower Operation 32
Cleaning And Servicing 33
Annual Cleaning/Inspection 33
Periodic Cleaning 33
Optional Accessories 34
Forced Air Kit 34
Installing Optional Firebrick Panels 34
Installing Optional Porcelain Panels 35
Installing Optional Black Magic Panels 35
Troubleshooting 36
Replacement Parts 39
VFC Firebox Parts 39
VFC24 Millivolt Burner Parts 40
VFC24 IPI Burner Parts 41
VFC32 Millivolt Burner Parts 42
VFC32 IPI Burner Parts 43
Replacement Logs 44
Warranty 45

INSTALLER

Please leave these instructions with the appliance.

OWNER

Please retain these instructions for future reference.

WARNING:

- **Any change to this heater or its controls can be dangerous.**
- **Improper installation or use of the heater can cause serious injury or death from fire, burns, explosion or carbon monoxide poisoning.**
- **Do not allow fans to blow directly into the fireplace. Avoid any drafts that alter burner flame patterns.**
- **Do not use a blower insert, heat exchanger insert or other accessory, not approved for use with this heater where applicable.**

1. Due to high temperatures, the appliance should be located out of traffic and away from furniture and draperies.
2. Children and adults should be alerted to the hazard of high surface temperature and should stay away to avoid burns or clothing ignition.
3. Young children should be carefully supervised when they are in the same room with the appliance.
4. Do not place clothing or other flammable material on or near the appliance.
5. Any safety screen or guard removed for servicing an appliance, must be replaced prior to operating the heater.
6. Installation and repair should be done by a qualified service person.
7. To prevent malfunction and/or sooting, an unvented gas heater should be cleaned before use and at least annually by a professional service person. More frequent cleaning may be required due to excessive lint from carpeting, bedding materials, etc. It is imperative that control compartments, burners and circulating air passageways be kept clean.
8. **CARBON MONOXIDE POISONING:** Early signs of carbon monoxide poisoning are similar to the flu with headaches, dizziness and/or nausea. If you have these signs, obtain fresh air immediately. Have the heater serviced as it may not be operating properly.
9. The installation must conform with local codes or, in the absence of local codes, with the **National Fuel Gas Code, ANSI Z223.I/NFPA54.**
10. This unit complies with the latest edition of ANSI Z21.11.2–2013, Unvented Heaters.
11. Do not install the heaters in a bathroom or bedroom.
12. Correct installation of the refractory cement logs, proper location of the heater, and annual cleaning are necessary to avoid potential problems with sooting. Sooting, resulting from improper installation or operation, can settle on surfaces outside the fireplace. See log placement instructions for proper installation.
13. Avoid any drafts that alter burner flame patterns. Do not allow fans to blow directly into fireplace. Do not place a blower inside burn area of firebox. Ceiling fans may create drafts that alter burner flame patterns. Sooting and improper burning will occur.
14. **CAUTION**: Candles, incense, oil lamps, etc. produce combustion byproducts including soot. Vent-free appliances will not filter or clean soot produced by these types of products. In addition, the smoke and/or aromatics (scents) may be reburned in the vent-free appliance which can produce odors. It is recommended to minimize the use of candles, incense, etc. while the vent-free appliance is in operation.
15. This is an unvented gas-fired heater. It uses air (oxygen) from the room in which it is installed. Provisions for adequate combustion and ventilation air must be provided.
16. This heater shall not be installed in a room or space unless the required volume of indoor combustion air is provided by the method described in the *National Fuel Gas Code, ANSI Z223.1/NFPA 54*, the *International Fuel Gas Code* or applicable local codes.
17. Keep room area clear and free from combustible materials, gasoline and other flammable vapors and liquids.
18. Unvented gas heaters are a supplemental zone heater. They are not intended to be the primary heating appliance.
19. Unvented gas heaters emit moisture into the living area. In most homes of average construction, this does not pose a problem. In houses of extremely tight construction, additional mechanical ventilation is recommended.
20. During manufacturing, fabricating and shipping, various components of this appliance are treated with certain oils, films or bonding agents. These chemicals are not harmful but may produce annoying smoke and smells as they are burned off during the initial operation of the appliance; possibly causing headaches or eye or lung irritation. This is a normal and temporary occurrence.

The initial break-in operation should last six hours with the burner at the highest setting. Provide maximum ventilation by opening windows or doors to allow odors to dissipate. Any odors remaining after this initial break-in period will be slight and will disappear with continued use.

21. Input ratings are shown in BTU per hour and are for elevations up to 2,000 feet. For elevations above 2,000 feet, input ratings should be reduced 4 percent for each 1,000 feet above sea level. Refer to the National Fuel Gas Code.
22. The appliance must be isolated from the gas supply piping system by closing its equipment shutoff valve during any pressure testing of the gas supply piping system at test pressures equal to or less than 1/2 psig (3.5 kPa).
23. Do not use this room heater if any part has been under water. Immediately call a qualified service technician to inspect the room heater and to replace any part of the control system and any gas control which has been under water.
24. Never burn solid fuels in a fireplace where a unvented room heater is installed.
25. Always have a fireplace screen in place when the appliance is in operation and, unless other provisions for combustion air are provided, the screen must have an opening(s) for induction of combustion air.

THIS APPLIANCE MAY BE INSTALLED IN AN AFTER-MARKET, PERMANENTLY LOCATED, MANUFACTURED (MOBILE) HOME, WHERE NOT PROHIBITED BY LOCAL CODES.

THIS APPLIANCE IS ONLY FOR USE WITH THE TYPE OF GAS INDICATED ON THE RATING PLATE. THIS APPLIANCE IS NOT CONVERTIBLE FOR USE WITH OTHER GASES.

NATIONAL FIREPLACE INSTITUTE NFI CERTIFIED www.nficertified.org

We recommend that our gas hearth products be installed and serviced by professionals who are certified in the U.S. by the National Fireplace Institute® (NFI) as NFI Gas Specialists.

WARNING: Never connect unit to private (non-utility) gas wells. This gas is commonly known as wellhead gas.

WARNING: This product and the fuels used to operate this product (liquid propane or natural gas), and the products of combustion of such fuels, can expose you to chemicals including benzene, which is known to the State of California to cause cancer and reproductive harm. For more information go to: www.P65Warnings.ca.gov.

CODES

Adhere to all local codes or, in their absence, the latest edition of THE NATIONAL FUEL GAS CODE ANSI Z223.1 or NFPA54 which can be obtained from:

American National Standards Institute, Inc.
1430 Broadway
New York, NY 10018

or

National Fire Protection Association, Inc.
Batterymarch Park
Quincy, MA 02269

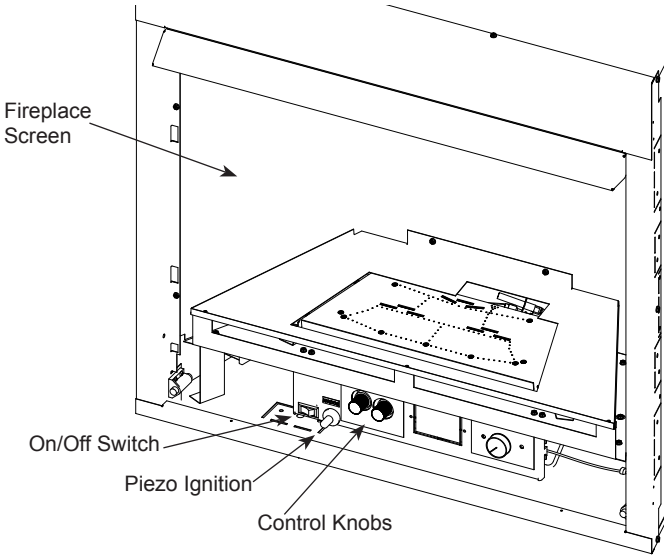

Figure 1. VFC Shown with Control Access Door Open

OPERATION

This unvented gas heater requires no outside venting and burns cleanly with excellent heating efficiency. As a zero-clearance appliance, it can be installed against (or recessed into) any wall that is accessible to a gas line.

GAS PRESSURES

Control	Fuel	Millivolt and IPI
Regulator Pressure	Nat.	3.5" w.c.
Pilot Regulator	Nat.	3.5" w.c.
Max. Inlet Pressure	Nat.	10.5" w.c.
Min. Inlet Pressure	Nat.	5.0" w.c.
Regulator Pressure	LP	10.0" w.c.
Max. Inlet Pressure	LP	13.0" w.c.
Min. Inlet Pressure	LP	11.0" w.c.

GAS SPECIFICATIONS AND ORIFICE SIZES

MODEL	FUEL	CONTROL	MAX BTU	MIN BTU	ORIFICE SIZE
VFC24CNV	NAT	MILLIVOLT	22,000	16,000	2.35mm
VFC24CPV	LP	MILLIVOLT	22,000	20,000	1.45mm
VFC24CNI	NAT	IPI	22,000	16,000	2.35mm
VFC24CPI	LP	IPI	22,000	20,000	1.45mm
VFC24LNV	NAT	MILLIVOLT	22,000	16,000	2.35mm
VFC24LPV	LP	MILLIVOLT	22,000	20,000	1.45mm
VFC24LNI	NAT	IPI	22,000	16,000	2.35mm
VFC24LPI	LP	IPI	22,000	20,000	1.45mm
VFC32CNV	NAT	MILLIVOLT	28,000	19,000	#38
VFC32CPV	LP	MILLIVOLT	27,000	22,000	#52
VFC32CNI	NAT	IPI	28,000	19,000	#38
VFC32CPI	LP	IPI	27,000	22,000	#52
VFC32LNV	NAT	MILLIVOLT	28,000	19,000	#38
VFC32LPV	LP	MILLIVOLT	27,000	22,000	#52
VFC32LNI	NAT	IPI	28,000	19,000	#38
VFC32LPI	LP	IPI	27,000	22,000	#52

NOTE: For LP models an external regulator is required to reduce supply pressure to a maximum of 13" w.c.

IGNITION CONTROLS

Piezo ignitor allows ignition of the pilot without the use of matches or batteries.

Millivolt and EcoLogic® 2.0 controls have four (4) positions:

- **OFF** - All gas to the gas logs is shut off at the valve.
- **IGN** - Valve position to light/maintain a standing pilot.
- **ON** - Valve position to turn ON/OFF log set with remote switch/thermostat.
- **LOW/HI** - Variable position to control flame height (heat output).

PILOT

The gas log heater is fitted with a specially designed safety pilot light (ODS assembly) which senses the amount of oxygen available in the room and shuts the gas log heater off if the oxygen level begins to drop below a satisfactory level. The pilot can only be re-lit when adequate fresh air is available.

THERMAL GENERATOR

The millivolt gas log pilot is fitted with a millivolt generator to provide power for remote activation.

COLD CLIMATE OPTION (IPI Models Only)

NOTE: If you live in a cold climate, seal all cracks around your appliance and wherever cold air could enter the room, with noncombustible material. It is especially important to insulate the outside chase cavity between the studs and under the floor on which the appliance rests, if the floor is above ground level.

Your fireplace is equipped with an intermittent pilot ignition (IPI) control. An IPI control with a standing pilot option provides the dual benefit of an economical and environmentally responsible product and one which lights easily even in the coldest climates. When in intermittent pilot mode (as it comes from the factory), your pilot remains unlit until needed, saving you fuel. Standing pilot mode, by comparison, is characterized by a continuously burning pilot. The benefit of a pilot which lights only when needed is fuel savings. However, with no pilot burning in your fireplace, units operating in colder climates may experience delayed start up or lock out. Because colder air is heavier than milder air and there is no pilot burning to maintain a warm stable temperature in your firebox, establishing a draft to aid ignition becomes difficult. This is perfectly normal but can be somewhat frustrating.

To remedy this issue, your fireplace has been designed with a cold climate pilot option, which, when active, maintains a warmer temperature inside your firebox to make ignition faster and more efficient. Operating your appliance in cold climate (aka standing) pilot mode will prohibit the need for multiple ignition attempts and will prevent the system from delaying start up or locking out.

To activate the cold climate option, simply move the cold climate toggle switch located on the right side of the black control center to the “On” (left) position. (Figure 2*)* You can operate your appliance in this mode regardless of whether you are using a remote control, wall switch or thermostat.

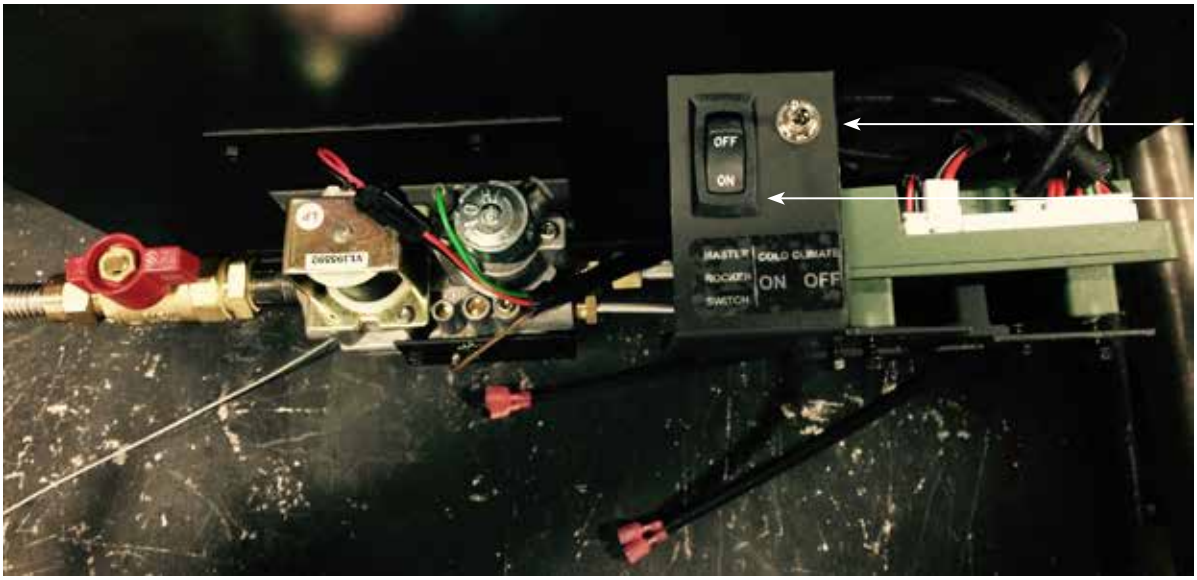

Cold Climate Switch

Master Switch

Figure 2. Cold Climate Option

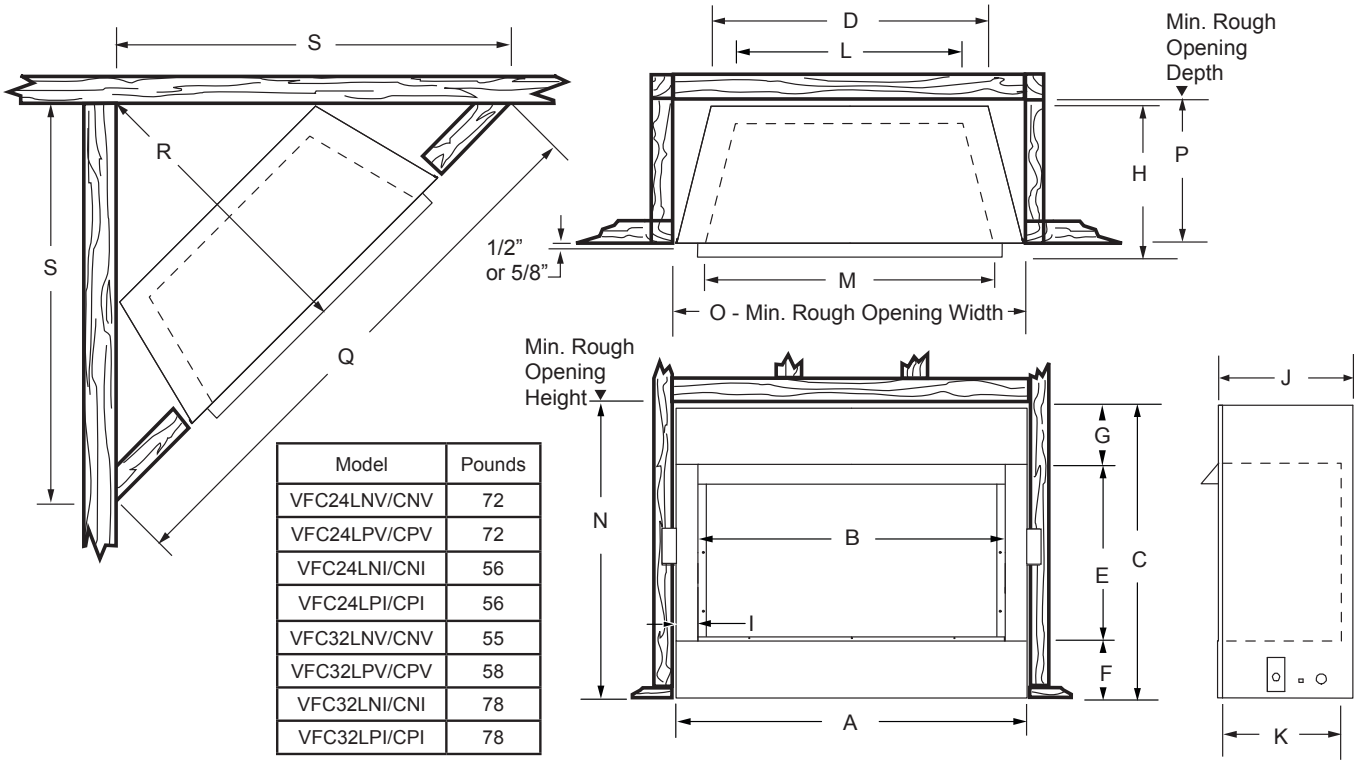

Model	Pounds
VFC24LNV/CNV	72
VFC24LPV/CPV	72
VFC24LNI/CNI	56
VFC24LPI/CPI	56
VFC32LNV/CNV	55
VFC32LPV/CPV	58
VFC32LNI/CNI	78
VFC32LPI/CPI	78

Figure 3. Fireplace and Framing Dimensions

Ref.	VFC24		VFC32	
A	24⅝"	(625 mm)	32"	(813 mm)
B	22⅝"	(575 mm)	28¾"	(730 mm)
C	26½"	(673 mm)	30"	(762 mm)
D	19"	(482 mm)	25¾"	(654 mm)
E	16¼"	(413 mm)	19½"	(495 mm)
F	4½"	(114 mm)	5¾"	(146 mm)
G	4⅞"	(124 mm)	5"	(127 mm)
H	14½"	(368 mm)	14½"	(368 mm)
I	1"	(25 mm)	1⅝"	(41 mm)
J	13⅛"	(333 mm)	13⅛"	(333 mm)
K	11⅜"	(289 mm)	11⅜"	(289 mm)
L	16"	(406 mm)	17½"	(445 mm)
M	22¾"	(578 mm)	28¾"	(730 mm)
Framing Dimensions				
N	26¾"	(680 mm)	30¼"	(768 mm)
O	25⅛"	(638 mm)	32½"	(826 mm)
P	13⅜"	(340 mm)	13⅜"	(340 mm)
Q	44⅞"	(1140 mm)	58"	(1478 mm)
R	24"	(610 mm)	29¼"	(743 mm)
S	32½"	(826 mm)	41"	(1041 mm)

WARNING:

- **Gloves are recommended when handling refractory cement logs to prevent skin irritation from loose fibers. Logs are fragile — handle with care.**

GETTING STARTED

Make sure you have received all parts:

Check your packing list to verify that all listed parts have been received. You should have the following:

- Unvented gas heater
- Installation/operating instruction
- Four (4) black screws
- Canopy and three (3) screws
- Two (2) anchoring screws
- Refractory cement logs or glass media

Carefully inspect the contents for shipping damage. If any parts are missing or damaged, immediately inform the dealer from whom you purchased the appliance. **Do not attempt to install any part of the appliance unless you have all parts in good condition.**

WHAT YOU WILL NEED FOR INSTALLATION:

You must have the following items available before proceeding with installation:

- External regulator (for propane/LPG only)
- Manual shutoff valve
- Piping which complies with local codes
- Sediment trap
- Phillips head screwdriver
- Tee joint
- Pipe sealant approved for use with propane/LPG
- Pipe wrench (resistant to sulfur compounds)

When planning the installation for the fireplace it is necessary to determine where the unit is to be installed and whether optional accessories are desired. Gas supply piping should also be planned. The following steps represent the normal sequence of installation. Each installation is unique, however, and might require a different sequence.

1. Position fireplace in desired location. Refer to the *Location of Fireplace* and *Clearances* and *Height Requirements*, and *Firebox Framing* sections found in this manual.

WARNING—Do not install the heater:

- **Where curtains, furniture, clothing, or other flammable objects are less than 42" from the front of the heater.**
- **In high traffic areas.**
- **In windy or drafty areas.**

NOTE: Be sure all packing material has been removed from underside the unit.

2. Install canopy and logs per instructions found in this manual. The canopy MUST be installed for safe operation of the unit.
3. Field wire main power supply to units with fan kit. Refer to the *Electrical Section* found in this manual. (Electrical connections should only be performed by an experienced, licensed certified tradesman).
4. Install optional ON/OFF kit on units with millivolt control. Refer to the installation instructions included with the kit and also refer to the *Electrical Wiring* section found in this manual.
5. Plumb gas line. Refer to the *Connecting the Gas* section found in this manual. (Gas connections should only be performed by an experienced, licensed/certified tradesman).
6. Complete finish wall material and/or surround.

ADEQUATE COMBUSTION AND VENTILATION AIR

This heater shall not be installed in a confined space or unusually tight construction unless provisions are provided for adequate combustion and ventilation air.

The National Fuel Gas Code, (ANSI Z223.1/NFPA54), defines a confined space as a space whose volume is less than 50 cubic feet per 1,000 BTU per hour (4.8m^3 per kw) of the aggregate input rating of all appliances installed in that space, and an unconfined space as a space whose volume is not less than 50 cubic feet per 1,000 BTU per hour (4.8 m^3 per kw) of the aggregate input rating of all appliances installed in that space. Rooms communicating directly with the space in which the appliances are installed, through openings not furnished with doors, are considered a part of a confined space.

WARNING: If the area in which the heater is operated does not meet the required volume for indoor combustion air, combustion and ventilation air shall be provided by one of the methods described in the *National Fuel Gas Code, ANSI Z223.1/NFPA 54*, the *International Fuel Gas Code* or applicable local codes.

Unusually tight construction is defined as construction where:

a. walls and ceilings exposed to the outside atmosphere have a continuous water vapor retarder with a rating of 1 perm (6 x 10^{11} kg per pa/sec-m^2) or less with openings gasketed or sealed, and
b. weather stripping has been added on openable windows and doors, and
c. caulking or sealants are applied to areas such as joints around window and door frames, between sole plates and floors, between wall-ceiling joints, between wall panels, at penetrations for plumbing, electrical and gas lines and other openings.

The following formula can be used to determine the maximum heater rating per the definition of unconfined space:

$$\frac{\text{BTU/Hr} = (L_1 + L_2)\ \text{Ft} \times (W)\ \text{Ft} \times (H)\ \text{Ft}}{50}$$

Consider two connecting rooms with an open area between, with the following dimensions:

$L_1 = 15^1/_2$ Ft., $L_2 = 12$ Ft., W = 12 Ft., H = 8 Ft.

$$\frac{\text{BTU/Hr} = (15^1/_2 + 12) \times (12) \times (8)}{50}$$

If there were a door between the two rooms the calculation would be based only on the room with the heater.

$$\frac{\text{BTU/Hr} = (15^1/_2) \times (12) \times (8)}{50}$$

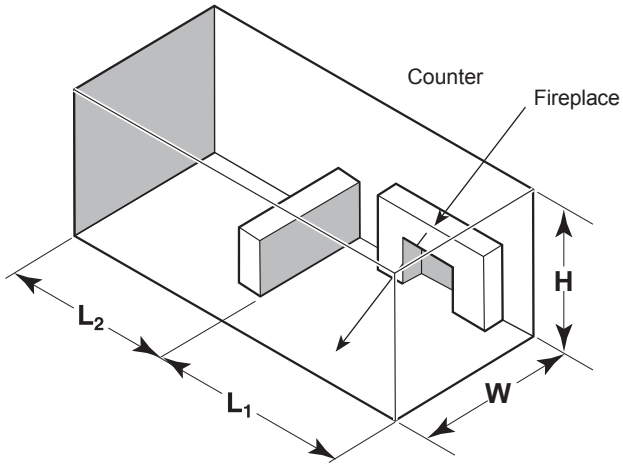

Figure 4. Combustion Air Calculation

FIREPLACE LOCATION

Carefully select the best location for installation of your unvented fireplace. The following factors should be taken into consideration.

- Clearance to side wall, ceiling, woodwork and window or other combustibles. Refer to “Clearances” section. Minimum clearances to combustibles **must be maintained.**
- Location must not be affected by drafts caused by kitchen exhaust fans, ceiling fans, return air registers for forced air furnaces / air conditioners, windows or doors.
- Installation must provide adequate ventilation and combustion air.
- **DO NOT INSTALL THESE MODELS IN A BEDROOM OR BATHROOM.**
- Location should be out of high traffic areas and away from furniture and draperies due to heat from firebox.
- Never obstruct the front opening of the unvented fireplace or restrict the flow of combustion and ventilation air.
- Minimize modifications to existing construction. Refer to Figure 5 below for location suggestions.
- Do not install in the vicinity where gasoline or other flammable liquids may be stored. The unvented firebox must be kept clear and free from the combustible materials.

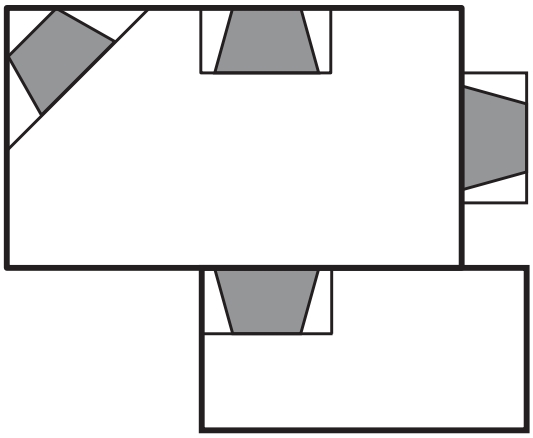

Figure 5. Possible Fireplace Locations

CLEARANCES

Ensure that minimum clearances shown in Figure 6 and Figure 7 are maintained. Left and right clearances are determined when facing the front of the firebox.

Follow these instructions carefully to ensure safe installation. Failure to follow these requirements may create a fire hazard.

Sidewall Clearances — The clearance from the inside of the appliance to any combustible adjacent wall should not be less than 9" for the VFC24 and VFC32. Figure 6

Ceiling Clearance — The ceiling must be at least 42" from the top of the firebox opening. Figure 6

Back Wall Clearance — The appliance may be placed against a combustible back wall.

Floor Clearance — The fireplace may be installed directly on a combustible floor or a raised platform of an appropriate height. Do not place fireplace on carpeting, vinyl, tile or other soft floor coverings. It may, however, be placed on flat wood, plywood, particle board or other hard surfaces. Be sure fireplace rests on a solid continuous floor or platform with appropriate framing for support and so that no cold air can enter from under the firebox.

Mantel clearances — The canopy supplied with the unit must be installed. If a combustible mantel is installed. It must meet the clearance requirements detailed in Figure 7

NOTE: The Monessen Barrington cabinet model series BWC300, BWC400 and BWC500 are specially designed to comply with all mantel temperature requirements. Any custom-built mantel must comply with all clearance requirements shown in this instruction manual.

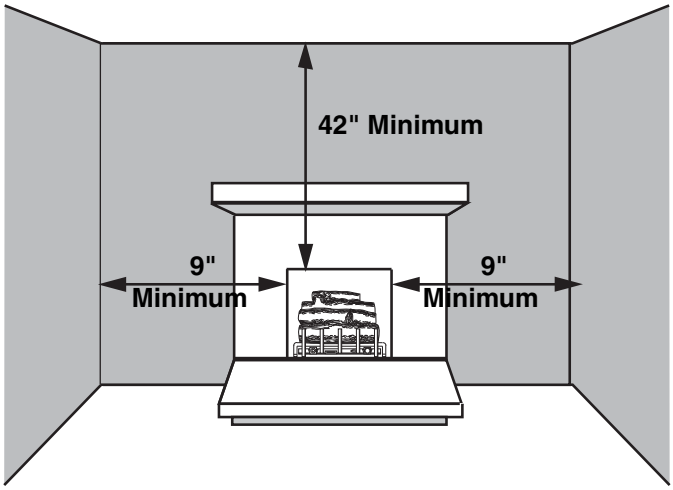

Figure 6. Sidewall and Ceiling Clearances

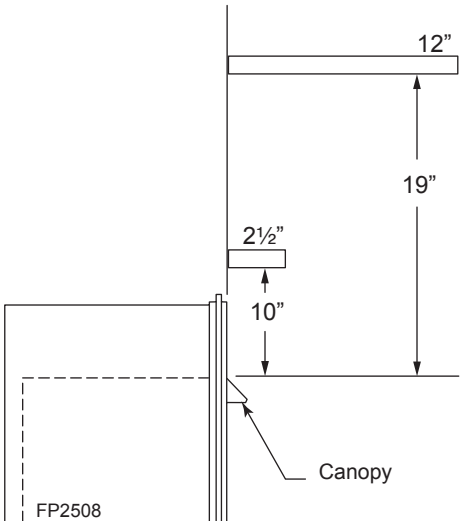

Figure 7. Mantel Clearances

WARNING: The dimensions shown in Figures 6, 7 and 8 are minimum clearances to maintain in installing this heater. Left and right clearances are determined when facing the front of the heater.
Follow these instructions carefully to ensure safe installation. Failure to follow instructions exactly can create a fire hazard.

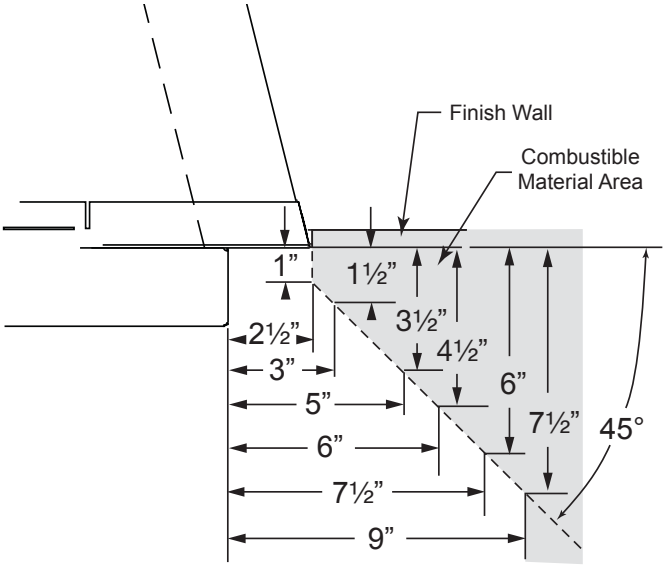

Figure 8. Mantel Leg Clearances

►VINYL FLOORING

Vinyl Flooring is sensitive to heat. A 14 inch minimum depth hearth extension is recommended when using vinyl flooring up to the wall. See Figure 9.

NOTICE: *Clearances that do not meet the minimum guidelines could result in damage or buckling to the vinyl flooring and is done at the installer's risk.*

Hearth and Home Technologies does not recommend adhesive based vinyl flooring due to thermal expansion. Floating-style flooring can be used, but will reach temperatures up tp 110°F in a room with ambient temperature of 70°F. Consult flooring specifications to ensure compatibility.

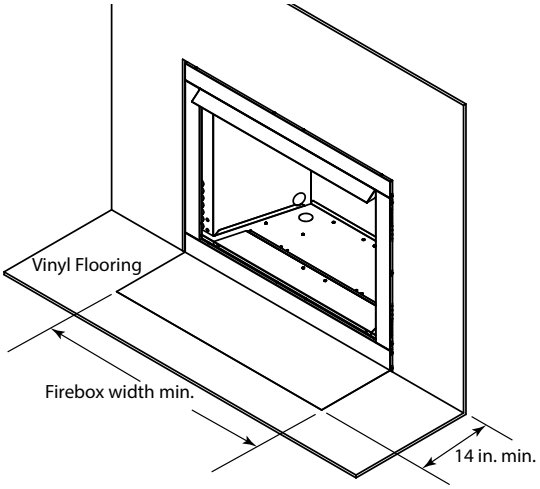

Figure 9. Vinyl Flooring Exception

FRAMING AND ANCHORING

If unit is to be "built in", fireplace framing can be built before or after the appliance is set in place. **BE SURE THAT ALL PACKING MATERIAL HAS BEEN REMOVED FROM THE UNDERSIDE OF THE UNIT PRIOR TO SETTING THE FIREBOX IN PLACE.** Construct fireplace framing following *Fireplace and Framing Dimensions*. The framing headers may rest directly on top of the firebox.

The fireplace may be installed directly on a combustible floor or a raised platform of an appropriate height. Do not place fireplace on carpeting, vinyl, tile or other soft floor coverings. It may, however, be placed on flat wood, plywood, particle board or other hard surfaces. Be sure fireplace rests on a solid continuous floor or platform with appropriate framing for support and so that no cold air can enter from under the firebox.

Anchor fireplace to the side framing members using nailing flanges.

1. Bend out the nailing flanges located on each side of the firebox.
2. Slide the firebox into prepared framing or position firebox in its final position and frame later.
3. Level the firebox by checking the top edge of the firebox. Shim if necessary.
4. Anchor firebox to the side framing members using 8d nails or other suitable fasteners. Figure 10
5. The canopy must be installed for safe operation of the heater. Refer to canopy installation details.

⚠ WARNING: The fireplace must be installed giving full consideration to the clearance and height requirements identified in this manual.

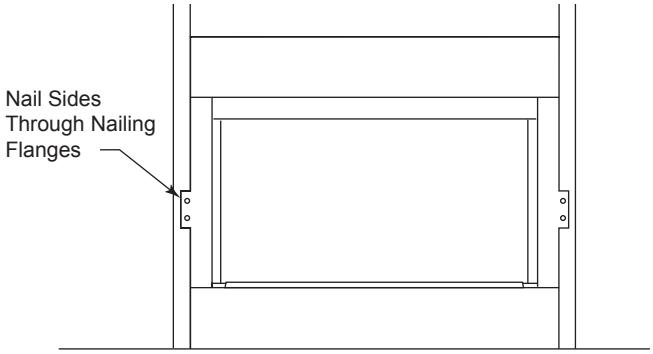

Figure 10. Nailing Flanges

SECURING HEATER TO FLOOR OR HEARTH

NOTE: Clearance requirements as detailed in the *Clearances* section on of this manual, must be met before securing the heater in place.

To prevent movement, the heater must be secured to the floor or hearth.

1. Open the control access door and remove the screen.
2. Secure the firebox with two anchoring screws (3⁄16" x 1¼" length) supplied with the fireplace system. Figure 11.

NOTE: If the unit is mounted on carpeting, tile or combustible material without the hearth, a metal or wooden base covering the entire width and depth of the base must be installed.

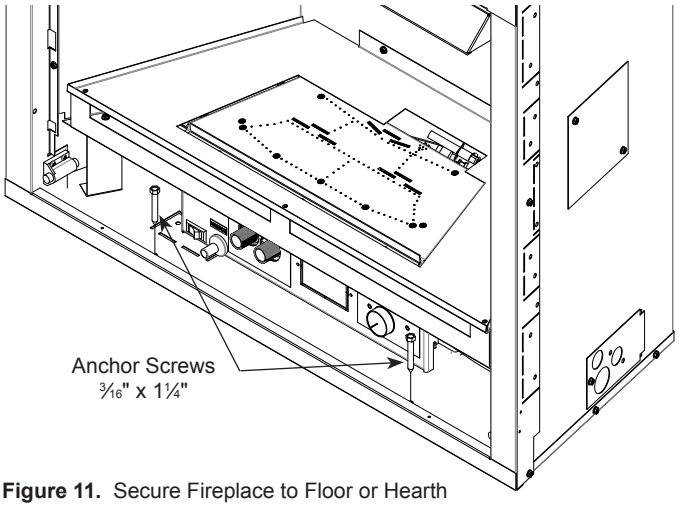

Figure 11. Secure Fireplace to Floor or Hearth

⚠ WARNING

Risk of Fire! Risk of Explosion! Risk of Asphyxiation!

Follow all instructions and warnings for installing and servicing gas line.

- Gas line installation and service must be performed by a qualified installer or licensed plumber in accordance with all applicable codes for the installation location (NFPA 54 / ANSI Z223.1, the current International Fuel Gas Code, or CAN/CSA B149 in Canada) (In the Commonwealth of Massachusetts installation must be performed by a licensed plumber or gas fitter).
- Check all fittings and connections by means of a listed combustible gas detector, a noncorrosive leak detection fluid, or other approved leak detection method. **DO NOT** use open flame.

⚠ WARNING

Risk of Fire! Risk of Explosion!

Pressure exceeding 1/2 PSIG (14 in. w.c. / 3.5 kPa) will damage gas valve control.

- Disconnect appliance and its manual shutoff valve BEFORE line pressure testing.
- Cap outlet on piping system at appliance connection BEFORE line pressure testing.
- Connect appliance AFTER confirming piping system pressure is equal or less than 1/2 PSIG (14 in. w.c. / 3.5 kPa).

Fuel Type

- Make sure the appliance is compatible with available gas types.

Gas Pressure

- Install pressure regulator upstream of gas valve if line inlet pressure exceeds 1/2 PSIG.
- Recommended inlet pressure for optimal appliance performance: 7.0 in. w.c. (NG) 12.0 in. w.c. (Propane)
- Verify inlet pressure is within specified range, including when other household gas appliances are operating.
- Pressure requirements when in operation are:

Gas Pressure	Natural Gas	Propane
Minimum inlet pressure	5.0 in. w.c.	11.0 in. w.c.
Maximum inlet pressure	10.0 in. w.c.	13.0 in. w.c.
Manifold pressure	3.5 in. w.c.	10.0 in. w.c.

Note: A listed (and Commonwealth of Massachusetts approved) 1/2 in. (13 mm) T-handle manual shut-off valve and flexible gas connector are connected to the 1/2 in. (13 mm) control valve inlet.

- **If substituting for these components, please consult local codes for compliance.**

Gas Connection and Gas Line Purging

⚠ WARNING

Risk of Fire! Risk of Explosion!

Gas buildup during line connection and purging could ignite.

- Support gas control when attaching pipe to prevent bending gas line.
- Gas line installation and purging of the gas fuel line MUST be performed by a qualified service technician or a licensed plumber in accordance with the applicable gas code for the installation location (NFPA 54 / ANSI Z223.1, the current International Fuel Gas Code, or CAN/CSA B149 in Canada).
- Use a listed combustible gas detector, a noncorrosive leak detection fluid, or other approved leak detection method to check all fittings and connections for gas leaks before lighting the appliance.
- Ensure ventilation
- Eliminate ignition sources, such as sparks or open flames.

- Refer to the following section for location of gas line access in appliance.
- Pipe incoming gas line into appliance.
- The gap between supply piping and gas access hole may be caulked with caulk with a minimum of 300ºF continuous exposure rating or stuffed with non-combustible, unfaced insulation to help prevent cold air infiltration.
- Ensure that gas line does not come in contact with outer wrap of the appliance. Follow local codes.
- Connect incoming gas line to the 1/2 in. (13 mm) connection on manual shutoff valve.
- A small amount of air will be in the gas supply line and must be purged. Light the appliance to allow air to purge through the pilot assembly.

CONNECTING THE GAS LINE

NOTICE: A qualified gas appliance installer must connect the heater to the gas supply. Consult all local codes.

WARNING: Use new black iron or steel pipe. Internally tinned copper or copper tubing can be used per National Fuel Code, section 2.6.3, providing gas meets hydrogen sulfide limits, and where permitted by local codes. Gas piping system must be sized to provide minimum inlet pressure (Listed on Data Plate) at the maximum flow rate (BTU/hr). Undue pressure loss will occur if the pipe is too small. A manual shutoff valve must be installed upstream of the appliance. Union tee and plugged 1/8" NPT pressure tapping point should be installed upstream of the appliance. Figure 12

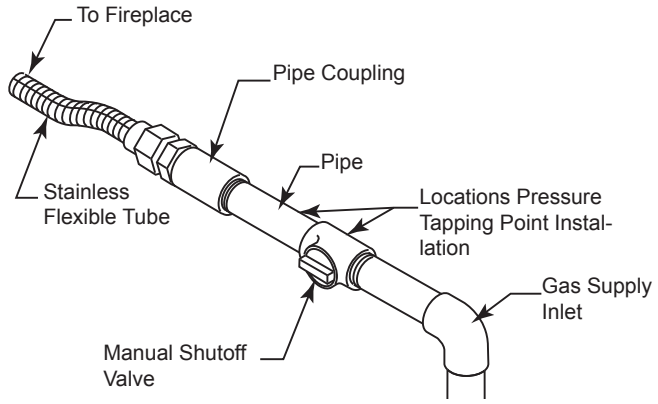

Figure 12. Gas Connection

IMPORTANT: Loosen the pipe adapter on the flex tube before installing to the system piping.

Always use an external regulator for all propane/LPG heaters only, to reduce the supply tank pressure to a maximum of 13" w.c. This is in addition to the internal regulator in the heater valve.

To reach factory installed flex line, go through access door on right or left side of firebox.

WARNING: CHECK GAS TYPE: The gas supply must be the same as stated on the heater's rating plate. If the gas supply is different, DO NOT INSTALL THE HEATER. Contact your dealer for the correct model. Connecting to the wrong gas type may result in property damage or personal injury.

WARNING: Connecting directly to an unregulated propane/LPG tank can cause an explosion

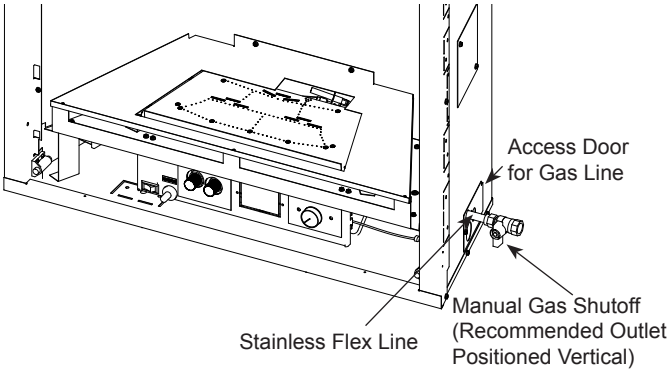

Figure 13. Access Holes

The stainless flex line is on the right side facing the fireplace and can connect to either a 3/8 NPT female or 1/2 NPT male pipe. To connect from the opposite side, route the pipe under the rear portion of the unit.

Test all gas joints from the gas meter to the heater valve for leaks using a gas analyzer or soap and water solution after completing connection. **DO NOT USE AN OPEN FLAME.**

Check the gas pressure with the appliance burning and the control set to **HIGH**.

Open control access door on either side of unit to find valve and regulator referred to below. Figure 13

CHECKING GAS PRESSURE – MILLIVOLT CONTROL

Figure 12

The valve regulator controls the burner pressure which should be checked at the pressure test point.

Turn captured screw counter clockwise two or three turns and then place tubing to pressure gauge over test point (Use test point "OUT" closest to control knob). After taking pressure reading, be sure and turn captured screw clockwise firmly to re-seal. Do not over torque. Check for gas leaks.

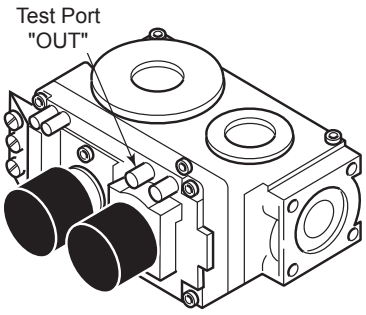

Figure 14. Pressure Test Point Location Millivolt Control

CHECK GAS PRESSURE – IPI

1. Check gas type. The gas supply must be the same as stated on the appliance's rating decal. If the gas supply is different from the fireplace, **STOP!** Do not install the appliance. Contact your dealer immediately.
2. To facilitate easier installation, a 18" (610 mm) flex line with manual shut-off valve has been provided with this appliance. Install and attach 1/2" gas line onto shut-off valve.
3. After completing gas line connection, purge air from gas line and test all gas joints from the gas meter to the fireplace for leaks. Use a solution of 50/50 water and soap solution or a gas sniffer.
4. To check gas pressures at valve, turn captured screw counter clockwise 2 or 3 turns and then place tubing to pressure gauge over test point. Turn unit to high. Figure 14 After taking pressure reading, be sure and turn captured screw clockwise firmly to reseal. Do not over torque. Check test points for gas leaks.

WARNING: Do NOT use open flame to check for gas leaks.

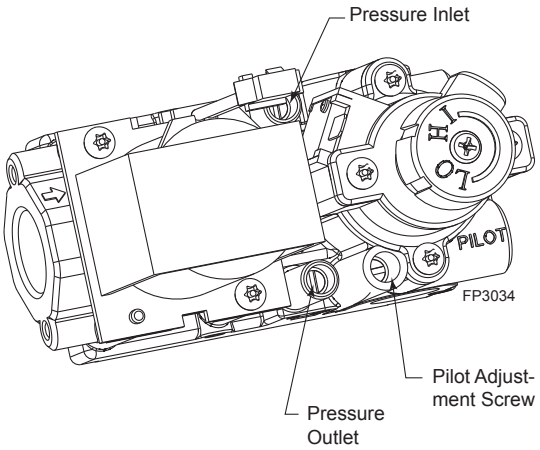

Figure 15. IPI Valve

WARNING: Do not operate the unit without the screen frame panel and canopy installed.

REMOVE SCREEN

NOTE: Fireplace screen must be removed to access log box and to install canopy.

Figure 16

1. Remove bottom access panel.
2. Removing fireplace screen frame panel by pushing screen frame panel up and out.
3. Remove log box, canopy and log support.
4. Remove and discard logs support and screws. *Figure 16a.*

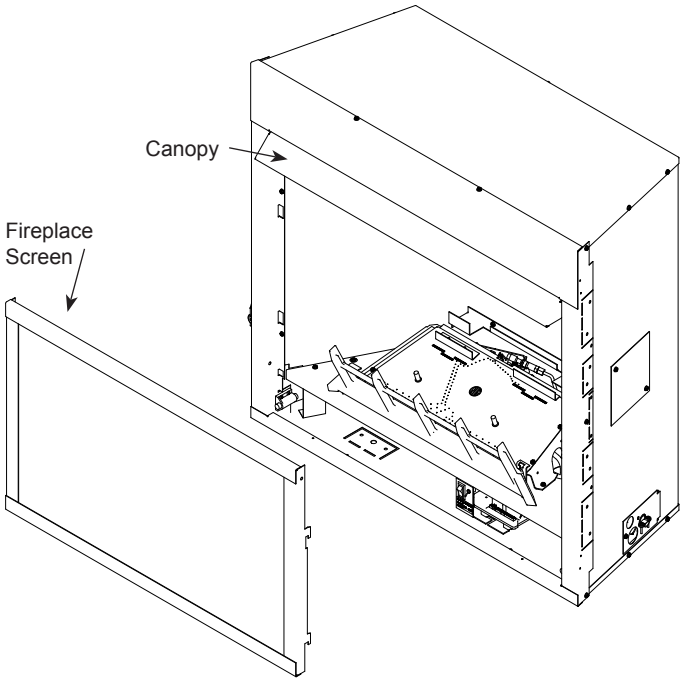

Figure 16. Remove Fireplace Screen Panel

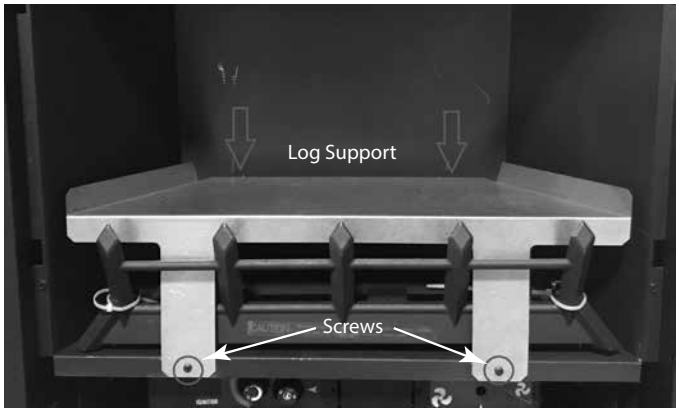

Figure 16a

1. Align the black canopy with the holes in the top frame assembly.
2. Install the three (3) screws (in owner's manual packaging) which attach the canopy to the top frame assembly.
3. Tighten all screws. Make sure the canopy is level and secure.

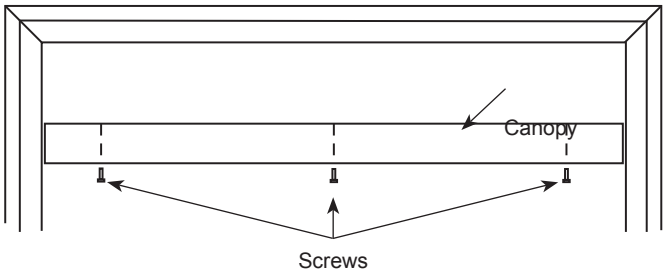

Figure 17. Install Canopy

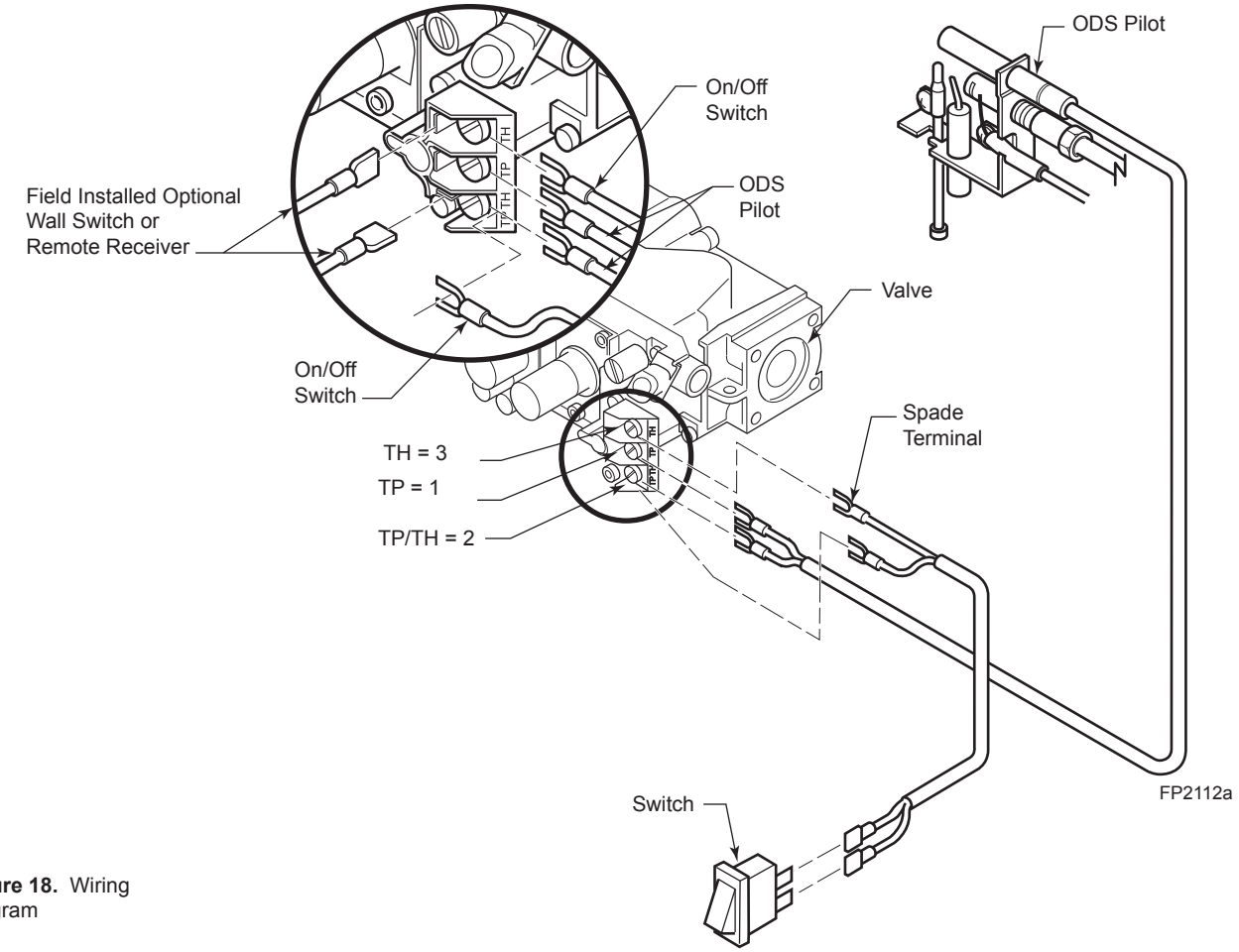

Figure 18. Wiring Diagram

WARNING: Label all wires prior to disconnection when servicing controls. Wiring errors can cause improper and dangerous operation. Verify proper operation after servicing.

WARNING: Do NOT connect wall switch to 110 V circuit.

The millivolt valve is a self-powered combination gas control **THAT DOES NOT REQUIRE 110V AC TO OPERATE.**

Refer to Figure 17 and installation instructions provided with optional wall switch, thermostat or remote control for wiring instructions. A maximum length of 15 feet of 18awg two conductor wire is to be used for wall switch or thermostat installations.

NOTE: Thermostats and switches must be suitable for millivolt operation.

CONNECT OPTIONAL WALL SWITCH OR THERMOSTAT

1. Use 18 awg, two-wire cable, 15 feet maximum length.
2. At one end of the cable, connect both wires to the wall switch or thermostat. At the other end, connect one wire to TP/TH and one wire to TH, or connect the wall switch/thermostat to the two male (0.25") terminals on the left side of the unit. The color of the wires does not matter.

CONNECT REMOTE RECEIVER

THESE INSTRUCTIONS SUPERCEDE THE SECTION ENTITLED "HEARTH MOUNT" IN THE MILLIVOLT HAND-HELD REMOTE INSTRUCTIONS SUPPLIED WITH THE REMOTE.

Figure 18

1. Remove bottom control door.
2. Connect the remote connector wires located in the unit to the remote receiver.
3. Stick Velcro® pads with self-adhesive backing to bottom of remote receiver and to floor of compartment behind access panel.
4. Attach remote receiver to firebox with Velcro® pads. Control switch must face forward.

NOTE: Do not place remote in combustion chamber, only the remote receiver.

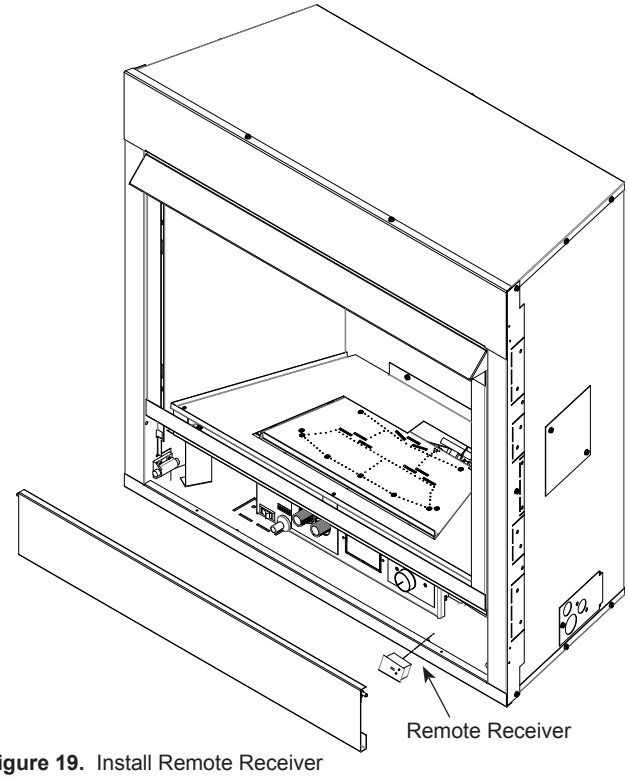

Figure 19. Install Remote Receiver

CHECK SYSTEM OPERATION

The millivolt system and individual components may be checked with a millivolt meter having a 0-1000 mV range. Conduct each check shown in chart below by connection meter test leads to terminals as indicated.

A. COMPLETE MILLIVOLT SYSTEM CHECK
("A" Reading: Thermostat contacts CLOSED, control knob "ON," main burner should turn ON)

a. If the reading is more than 100 millivolts and the automatic valve still does not come on, replace the control.
b. If the closed circuit reading ("A" reading) is less than 100 millivolts, determine cause for low reading, proceed to Section B below.

B. Thermopile Output Reading Check
("B" Reading: Thermostat contacts OPEN, main burner OFF)

1. Check gas pressure to the unit. If gas pressure is within minimum and maximum on data plate, then check pilot voltage, 325 millivolts minimum. If the minimum millivolt reading is not obtainable, replace pilot.

Check Test	To Test	Connect Meter Leads to Terminals	Switch or Thermostat Contacts	Meter Reading Should Be
A	Complete System	2 & 3	Closed	Closed
B	Thermopile Output	1 & 2	Open	Open

FOR YOUR SAFETY READ BEFORE LIGHTING

WARNING: If you do not follow these instruction exactly, a fire or explosion may result causing property damage, personal injury or loss of life.

A. This appliance is equipped with a pilot which must be lit with built-in piezo ignitor while following these instructions exactly.

B. BEFORE OPERATING smell all around the appliance area for gas. Be sure to smell next to the floor because some gas is heavier than air and will settle on the floor.

WHAT TO DO IF YOU SMELL GAS:

- Turn off all gas to the appliance.
- Open windows.
- Do not attempt to light any appliance.
- Do not touch any electric switch; do not use any phone in your building.
- Immediately call your gas supplier from a neighbor's phone. Follow the gas supplier's instructions.
- If you cannot reach your gas supplier, call the fire department.

C. Use only your hand to push in, or turn the gas control knob. Never use tools. If the knob will not push in or turn by hand, don't try to repair it. Call a qualified service technician. Force or attempted repair may result in a fire or explosion.

D. Do not use this appliance if any part of it has been under water. Immediately call a qualified service technician to inspect the appliance and to replace any part of the control system and any gas control that has been under water.

LIGHTING PILOT FOR THE FIRST TIME

INITIAL LIGHTING

Purge air from the supply line as follows:

- Open main shutoff valve.
- Unscrew main pressure test point.
- Leave inlet test screw open until gas comes in.
- When gas is flowing, tighten inlet screw immediately.

WARNING: NEVER use open flame to check for gas leaks.

LEAK TESTING

1. Follow the pipe from the gas supply line connection to the gas valve. Check connection for leaks with soap and water mixture.
2. Next check for gas leaks at the burner with soap and water mixture.
3. Check the pilot for gas leaks with soap and water mixture.

LIGHTING PILOT FOR THE FIRST TIME

APPROVED LEAK TESTING METHOD

You may check for gas leaks with the following methods only:

- Soap and water solution
- An approved leak testing spray
- Electronic sniffer

NOTE: Remove any excessive pipe compound from the connections. Excessive pipe compound can set off electronic sniffers.

WARNING: NEVER use open flame to check for gas leaks.

WARNING: If using a soap and water solution to test for leaks, DO NOT spray solution onto control body.

Check for gas leaks in each of the following locations:

- Pipe from the gas supply line connection to the gas valve
- Burner connections
- Pilot
- Each joint or connection
- Field made joints / gas shutoff valve
- Factory made joints
- All joints on valve and control body

LIGHTING PILOT

WARNING: The control has an interlock device that does not allow the lighting of the fireplace up to the moment the safety device of the flame has not interrupted the gas flow. After that period of time (when the magnet is closed), it is possible to start the lighting operation.
The gas control knob is designed to be operated by hand. DO NOT use any tools during this operation. Damaged knobs may result in serious injury.

1. Depress and turn knob counterclockwise ↶ to pilot position.
2. Depress fully and hold pilot gas knob. Depress piezo igniter as many times as needed to ignite pilot. Keep knob fully depressed for a few seconds. Release and check that pilot continues to burn.

If the pilot does not stay lit, repeat steps 1 and 2.

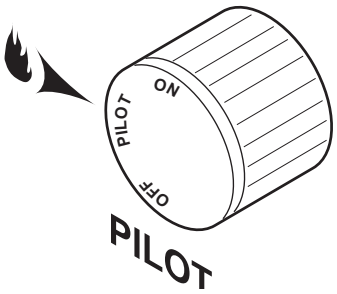

Pilot Position

Continued on next page

LIGHTING BURNER

LIGHTING THE BURNER

Depress and turn the knob counterclockwise to the "ON" position. It will take less than four (4) seconds for the burner to ignite.

MAIN BURNER SWITCH

This switch allows you to turn on and to turn off the main burner without using the gas valve knob. is in the "ON" position to light the main burner.

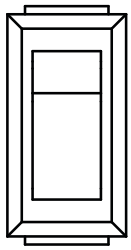

Wall Switch

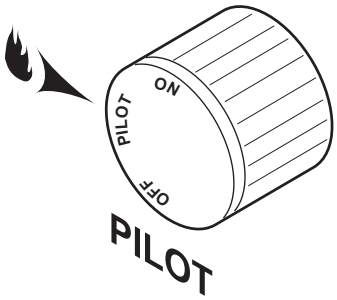

Pilot Position

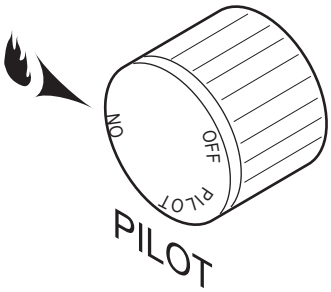

On Position

TO TURN OFF GAS

Depress and turn knob clockwise to "OFF" position.

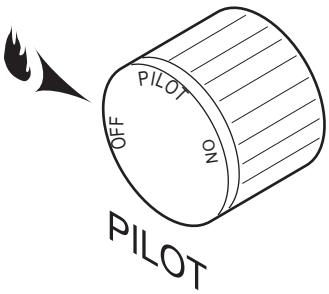

Off Position

CAUTION

Label all wires before disconnecting when servicing controls. Wiring errors can cause improper and dangerous operation.

WARNING: Electrical connections should only be performed by a qualified, licensed electrician. Main power must be off when connecting to main electrical power supply or performing service. All wiring shall be in compliance with all local, city and state codes. The appliance, when installed, must be electrically grounded in accordance with local codes or in the absence of local codes, with the National Electrical Code ANSI/NFPA 70 (latest edition) and Canadian Electrical Code, CSA C22.1.

ELECTRICAL WIRING

General

This fireplace is equipped with an IPI control valve which operates on 6 volts. The 6 volt DC adapter plugs into the fireplace junction box A/C power supply.

It is equipped with a battery back-up which will operate the unit for approximately 48 hours in the event of a power failure using on/off function only. Use of high/low function will reduce battery life while in back-up mode..

Optional Accessories

This fireplace may be used with a wall switch, wall mounted thermostat or IPI hand held remote control.

WARNING: Do NOT connect to a 110V circuit.

JUNCTION BOX WIRING

1. This should be done before framing the fireplace. Wire the receptacle into an electrical circuit. Wire with minimum 60° C wire in accordance with prevailing codes.
2. Remove the external junction box cover by removing the screw from the side of the outside firebox wall. Junction box was installed at the factory.
3. The junction box cover has a factory installed “romex” style strain relief connector. After connecting the wires, route the wire leads through this connector. Refer to the wiring diagram in Figure 20.

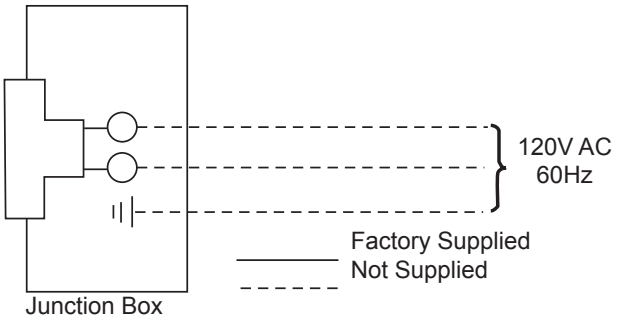

Figure 20. Junction Box Wiring Diagram

WALL SWITCH INSTALLATION

The wall switch wire connection is located off the wire harness coming out of the IPI Control Board. The label is wired 'wall switch'. Connect the low voltage switch wires to the two (2) terminals labeled "wall switch" from the control board. Run wire to desired location on wall. Up to 50 feet of 18 gauge wire may be used if necessary. Attach wires to wall switch. Mount the wall switch in a junction box and screw on cover. Figure 21

IPI SYSTEM WIRING DIAGRAM

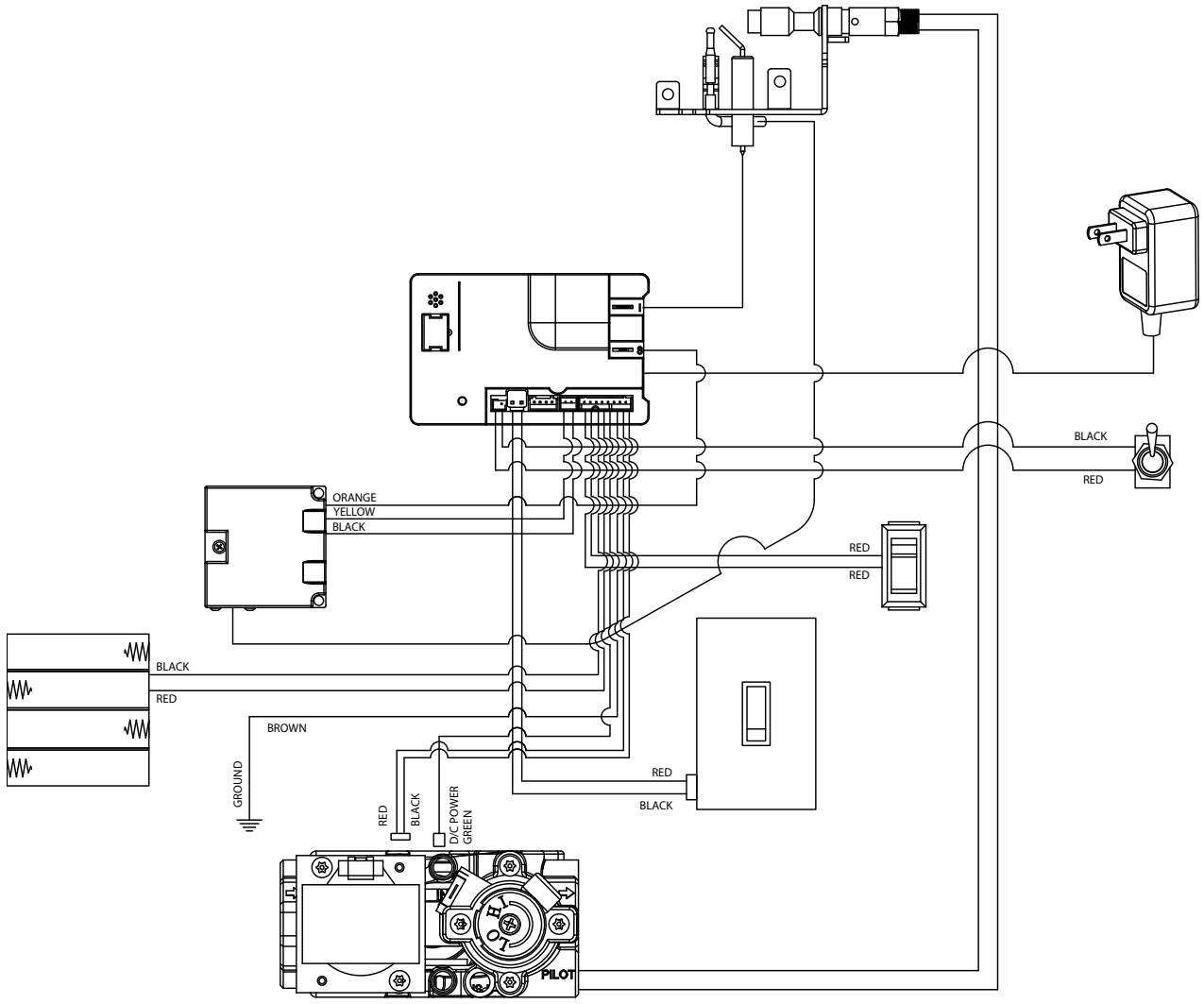

Figure 21. IPI System Wiring Diagram

CAUTION

Electrical connections should only be performed by a qualified, licensed electrician. Main power supply must be turned off before connecting fans to the main electrical power supply or performing service.

OPERATIONS AND INDICATIONS

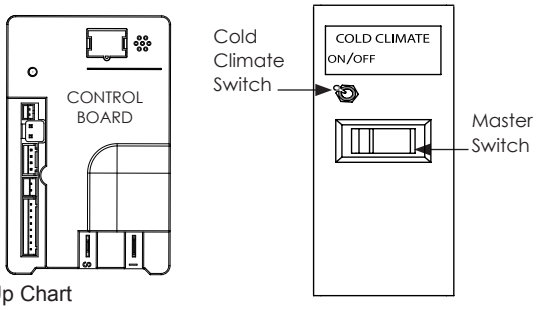

System Set Up Chart

NOTE: When using ON/OFF wall switch, the master switch, located in bottom of fireplace must be in the ON position to perform all configuration setup operations.

FUNCTION	OPERATION	DEFAULT SETTING
Cold Climate Pilot On/Off	Flip the toggle switch to ON.	OFF

Operations

FUNCTION	OPERATION
Power Up	Flip the Master Switch to ON position to power up the system.
Fireplace On	Turn on wall switch to turn the fireplace on. NOTE: If master switch was just switched to ON, then at first use of wall switch, it may need to be turned ON - OFF - ON to synchronize the two switch settings.
Fireplace Off	Turn the wall switch to the OFF position, or turn the ON/OFF master switch to the OFF position

Self Diagnostics Chart

The fireplace has a self diagnostic LED on the control board enabling you to troubleshoot problems and potentially avoid a service call. Please refer to the chart below for indicator reference.

FUNCTION	OPERATION
Sparking error	Red LED, Flash 2 times
Flame error	Red LED, Flash 3 times
Ignition fail	Red LED, Flash 4 times
Re-ignite warning	Red LED, Flash 5 times
Pilot valve voltage error	Red LED, Flash 6 times
Main valve voltage error	Red LED, Flash 7 times
Low battery	Red LED 2.5 sec, Flash once

Remote Operations

The following functions are available on the RMSC hand held remote.
NOTE: Flame height control is only available with purchase and installation of a stepper motor kit with RF receiver

REMOTE FUNCTION	OPERATION	ICON
Fireplace On	Press the ON button on the transmitter.	
Fireplace Off	Press the OFF button 3 times or hold the OFF button 3 seconds for memory off.	
Flame Height Up	Press the ON button once to turn on the fireplace with maximum flame setting.	
Flame Height Down	Press the OFF button to lower the flame height to medium and low.	
Count Down Timer Mode	Press TIMER button to enter the timer mode. Keep pressing the TIMER button to set the desired time or press TIMER button to “0” to exit timer mode.	

FOR YOUR SAFETY READ BEFORE LIGHTING

WARNING: If you do not follow these instructions exactly, a fire or explosion may result causing property damage, personal injury or loss of lie.

A. This appliance is equipped with an ignition device which automatically lights the pilot. Refer to the instructions.

B. BEFORE OPERATING smell all around the appliance area for gas. Be sure to smell next to the floor because some gas is heavier than air and will settle on the floor.

WHAT TO DO IF YOU SMELL GAS:

- Do not attempt to light any appliance.
- Do not touch any electric switch; do not use any phone in your building.
- Immediately call your gas supplier from a neighbor's phone. Follow the gas supplier's instructions.
- If you cannot reach your gas supplier, call the fire department.

C. Turn Master Switch to ON position by hand. Never use tools. If the switch will not function by hand, do not try to repair it. Call a qualified service technician. Force or attempted repair may result in a fire or explosion.

D. Do not use this appliance if any part of it has been under water. Immediately call a qualified service technician to inspect the appliance and to replace any part of the control system and any gas control that has been under water.

OPERATING INSTRUCTIONS

1. **STOP!** Read the safety information above.
2. This appliance is equipped with an ignition device which automatically lights the burner. Do not try to light the burner by hand.
3. Wait five (5) minutes to clear out any gas. Then smell for gas, including near the floor. If you smell gas, **STOP!** Follow "B" in the safety information on page 38. If you do not smell gas, go to next step.
4. Press the wall switch to the "ON" (-) position. Sparker will spark and pilot flame will light.
5. Once pilot flame is established, the main burner flame will light automatically.
6. If the pilot will not stay lit after several tries, turn the master switch to "OFF" and call your service technician or gas supplier.

Wall Switch

Master Switch

TO TURN OFF GAS TO APPLIANCE

1. Turn Wall Switch to "OFF".
2. Turn Master Switch to "OFF".
3. Turn off all electrical power to the appliance if service is to be performed.

WARNING: This fireplace has a three-prong, grounded electrical plug. This plug helps protect you against electrical shock. Only connect plug to a properly grounded, three-prong receptacle. Do not cut or remove the grounded prong from this plug.

WARNING: Never attempt to service heater while it is plugged in, operating, or hot. Burns and/or electrical shock could result.

IMPORTANT: Always check local building codes. The installation must comply with local regulations as well as the national electric codes.

If any of the original wire as supplied with the fireplace must be replaced, contact dealer for proper replacement wiring harness. (Refer to parts list for correct part number). 120 volts, 60Hz, 1 amp.

Electrical power cord (plug) can be routed to exit the VFC24 or VFC32 on either the left side or the right side. Remove cord protector from side of unit, route power cord through hole opposite side. Reinstall cord protector.

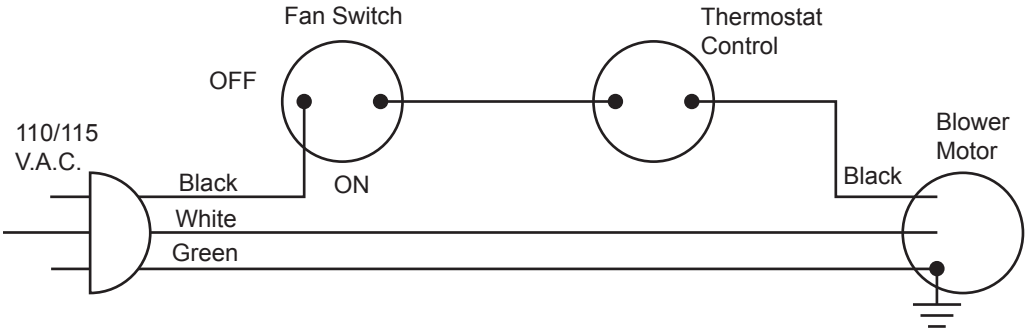

Figure 22. VFC Wiring Diagram

WARNING: The positioning of the logs is critical to the safe and clean operation of this heater. Sooting and other problems may result if the logs are not properly and firmly positioned in the appliance. Never add additional logs or embellishments such as pine cones, vermiculite or rock wool to the heater. Only use the logs and 2G-RW rock wool supplied with the unit.

Failure to position the parts in accordance with diagrams below or to use only parts specifically approved for this heater may result in property damage or personal injury.

CAST IRON GRATE INSTALLATION

Install the cast iron grate by inserting screw head on back of right side of grate into the "I" shaped slot on front right corner of unit. After moving screw head to the bottom of the "I" slot, insert the screw head on the back of the left side of grate into the keyhole slot on the left front of unit. Figure 23

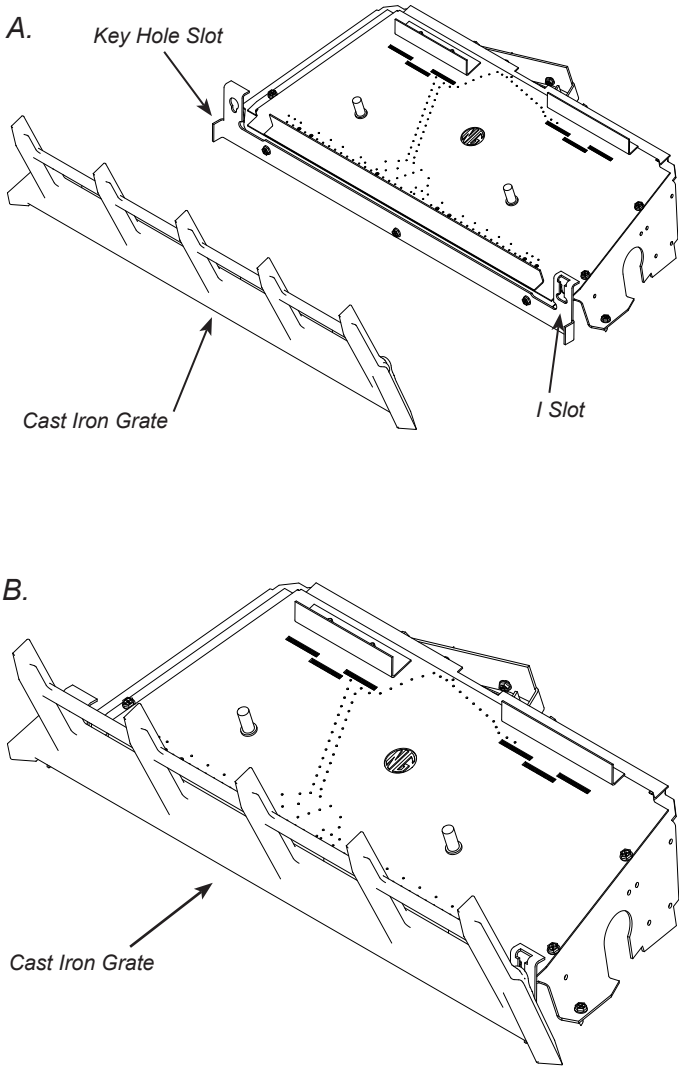

Figure 23. Install Cast Iron Grate

ROCK WOOL PLACEMENT

Before installing logs, place rock wool in dime size pieces evenly over small burner ports starting in the rear of the burner going towards the front. Avoid placing rock wool on slots on each side of rear burner and on large yellow flame ports on front of burner. After covering small burner ports, discard any excess rock wool. Figure 24

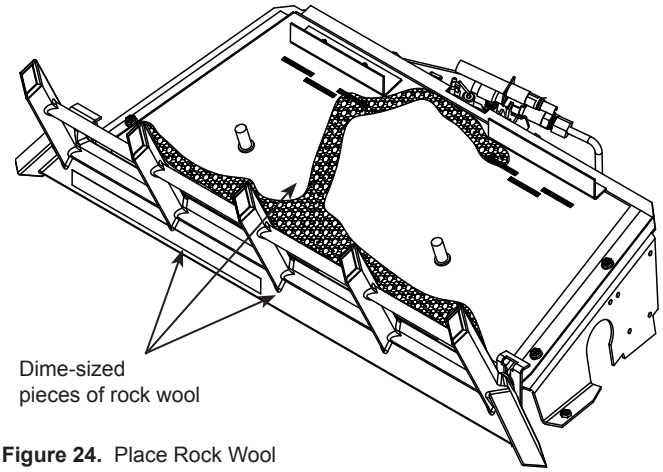

Figure 24. Place Rock Wool

Place rock wool over the two carryover ports on the backside of the burner. Do not extend rock wool beyond edge of the burner. Figure 24.1.

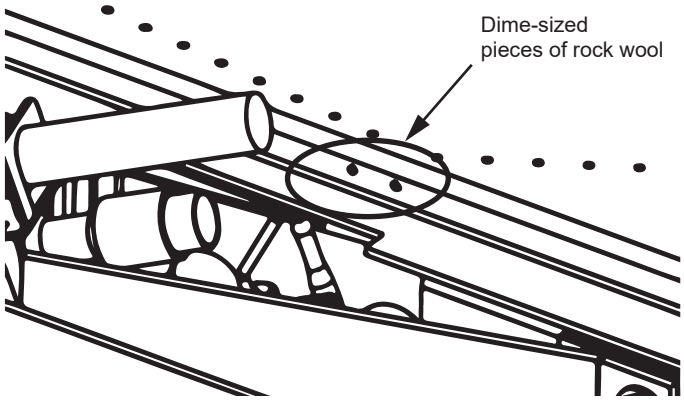

Figure 24.1. Place Rock Wool

WARNING: Use only rock wool provided with log set. Do not add additional rock wool. Place rock wool on burner ports only. Keep air gap between rear log and burner clean.

LOG PLACEMENT (VFC24L AND VFC32L ONLY)

Before you begin — This unit is supplied with six (6) refractory cement logs. Do not handle these logs with your bare hands. Always wear gloves. After handling the logs, wash your hands gently with soap and water.

1. Place bottom right front log #1 on right pin located on burner. Rear of log will make slight contact with the front grate slot bracket. Figure 25

Figure 25.

2. Place the right rear log #2 behind #1 locking the two logs together with the male notch into the back of log #1. Figure 26

Figure 26.

CAUTION

DO NOT sprinkle volcanic rock on the logs or around the pilot or the main burner. This may cause sooting. Only place volcanic rock on the floor of the fireplace.

During initial operation of the new heater, burning logs will give off a paper burning smell and orange flames will be present. Simply open the windows for a few hours to vent the odor.

3. Place the middle rear log #3 with the center log placed behind the right flame bracket. T he rear log will rest on the back log support. Figure 27

Figure 27.

4. Place the left front log #4 on the front left pin located on the burner. Left front edge of the log will make slight contact with the front grate slot bracket. Figure 28

Figure 28.

5. Place the left middle log #5 with the **C** channel locking the front and middle log in place. Figure 29

Figure 29.

6. Place the left rear log #6 by aligning the rear support bracket to the cut out on the rear of log #6. The left side will also align with the channel cut into log #5. Figure 30

Figure 30.

7. Place the top center log #7 by aligning the notch from log #3 to the bottom. The front edge of the log #7 will rest on the front grate horizontal bar. Figure 31

Figure 31.

Log placement complete.

GLASS ONLY PLACEMENT

NOTE: Two (2) bags of glass are supplied with the fireplace. Both bags may be used to cover the entire floor and burner. We advise against using additional glass as too much can cut off the proper amount of air the burner needs to operate cleanly. This may cause sooting.

1. Spread glass evenly in one layer over the entire floor and burner. Be sure to use a single layer only over the ported area so as not to impinge the flame.
2. Turn burner on and adjust glass over ported areas to achieve an even, clean flame.

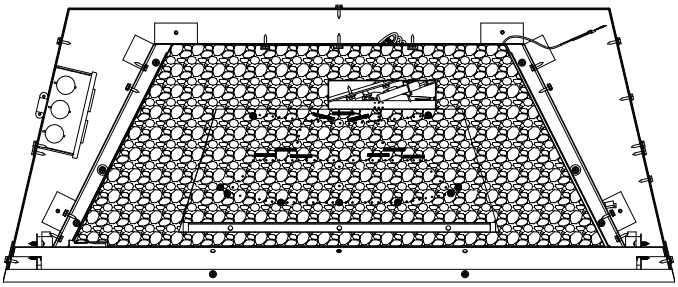

Figure 32.

PILOT AND BURNER FLAME APPEARANCE

Flames from the pilot, front and rear burner should be visually checked as soon as the heater is installed. In addition, periodically check the flames visually during operation.

CHECKING THE PILOT FLAME

The pilot flame must always be present when the heater is in operation. It should just touch the top of the thermocouple tip for natural. Refer to Figure 32 for correct pilot flame.

If the pilot flame does not touch the thermocouple, then the main burner cannot function reliably. Refer to Figure 34 for incorrect shape of pilot flame.

MILLIVOLT CONTROL

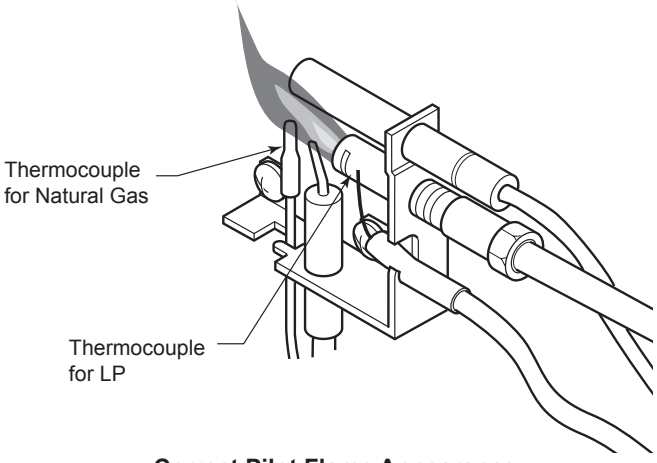

Correct Pilot Flame Appearance

Figure 33. Millivolt Control Pilot Flame Appearance

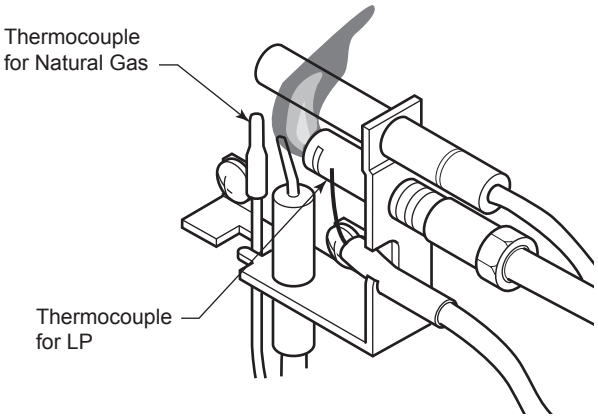

Incorrect Pilot Flame Appearance

Figure 34. Millivolt Control Incorrect Pilot Flame Appearance

CHECKING BURNER FLAME

VFC24L/VFC32L MODELS
In normal operation at full rate after 15 minutes, the following flame appearances should be observed:
Burner will have a random pattern of yellow flames. Figure 35 There should be glowing embers in front of burner.
NOTE: The front flames and embers will be an opaque orange color during the burn off time.

VFC24C/VFC32C MODELS
In normal operation at full rate after 15 minutes, the following flame appearances should be observed:
Burner will have a random pattern of yellow flames. Figure 36

Figure 35. VFC Traditional Flame Appearance

Figure 36. VFC Contemporary Flame Appearance

OPERATING INSTRUCTIONS

Avoid any drafts that alter burner flame patterns. Do not allow fans to blow directly into the fireplace. Do not place a blower inside the burn area of the firebox. Ceiling fans may create drafts that alter flame patterns. Sooting and improper burning will result.

During manufacturing, fabricating and shipping, various components of this appliance are treated with certain oils, films or bonding agents. These chemicals are not harmful, but may produce annoying smoke and smells as they are burned off during the initial operation of the appliance, possibly causing headaches or eye or lung irritation. *This is a normal and temporary occurrence.*

The initial break-in operation should last two to three hours with the burner at the highest setting. Provide maximum ventilation by opening windows or doors to allow odors to dissipate. Any odors remaining after this initial break-in will be slight and will disappear with continued use.

This appliance must not be used with glass doors in the closed position. This can lead to pilot outages and severe sooting outside the fireplace.

FOR YOUR SAFETY READ BEFORE LIGHTING

WARNING: If you do not follow these instruction exactly, a fire or explosion may result causing property damage, personal injury or loss of life.

A. This appliance is equipped with a piezo ignition device which automatically lights the pilot. If the piezo is not working properly see Match Lighting Instructions.

B. BEFORE OPERATING smell all around the appliance area for gas. Be sure to smell next to the floor because some gas is heavier than air and will settle on the floor.

WHAT TO DO IF YOU SMELL GAS:

- Do not attempt to light any appliance.
- Do not touch any electric switch; do not use any phone in your building.
- Immediately call your gas supplier from a neighbor's phone. Follow the gas supplier's instructions.
- If you cannot reach your gas supplier, call the fire department.

C. Use only your hand to push in, or turn the gas control knob. Never use tools. If the knob will not push in or turn by hand, don't try to repair it. Call a qualified service technician. Force or attempted repair may result in a fire or explosion.

D. Do not use this appliance if any part of it has been under water. Immediately call a qualified service technician to inspect the appliance and to replace any part of the control system and any gas control that has been under water.

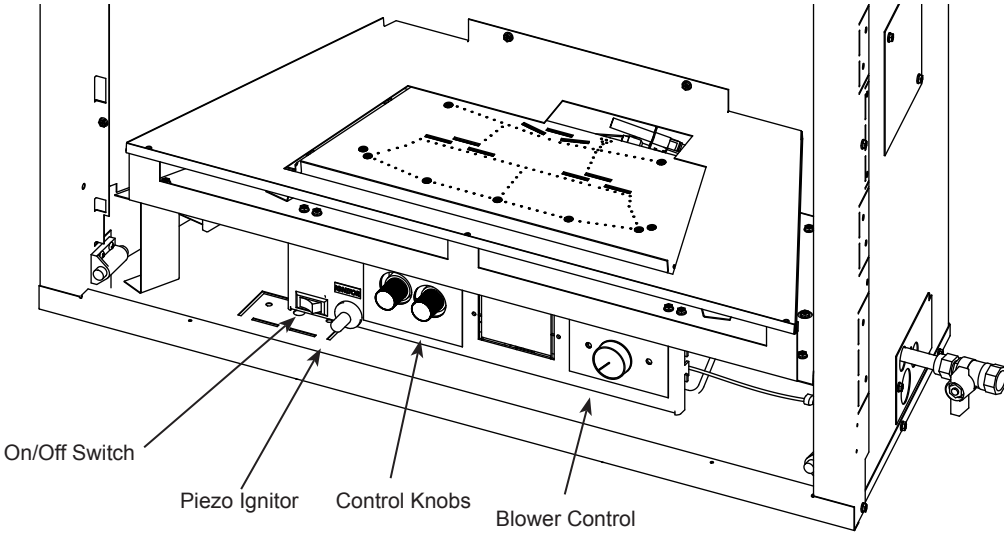

Location of Piezo Ignitor, Control Knobs and Switch on Millivolt Unit, Hi/Lo Remote Control and Manual Unit

MILLIVOLT/THERMOSTAT CONTROL LIGHTING INSTRUCTIONS

1. **STOP!** Read the safety information label.
2. Make sure the manual shutoff valve is fully open.
3. This gas log set is equipped with an ignition device (piezo) which automatically lights the pilot. If piezo ignitor does not light the pilot, refer to instructions for *Match Lighting Instructions* on the following page.
4. Turn gas control knob clockwise ↷ to the OFF position and turn ON/OFF switch to OFF position.
5. Wait (5) minutes to clear out any gas. Then smell for gas, including near the floor. If you smell gas, STOP! Follow "B" in the safety information label. If you don't smell gas, go to next step.
6. From OFF position, turn the gas control knob counterclockwise ↶ to IGN position. Push in control knob for 5 seconds. ***NOTE: If you are running the heater for the first time, it will be necessary to press in the control knob for 30 seconds to allow air to bleed out of the gas piping.***
7. With the control knob pushed in, push in and release the piezo ignitor button to light the pilot.
8. Continue pushing the control knob in for a further 60 seconds to prevent the flame detector from shutting off the gas while the probe is warming up. Release the control knob.
9. Turn gas control knob counterclockwise ↶ to the ON position.
10. After the pilot has been lit for one minute, the burners can be turned on. Turn the ON/OFF switch to ON position or adjust thermostat to desired setting.
11. If the gas logs will not operate, follow the instructions “To Turn Off Gas To Appliance” below and call your service technician or gas supplier.

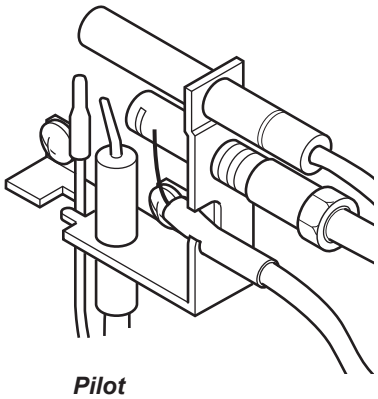

Pilot

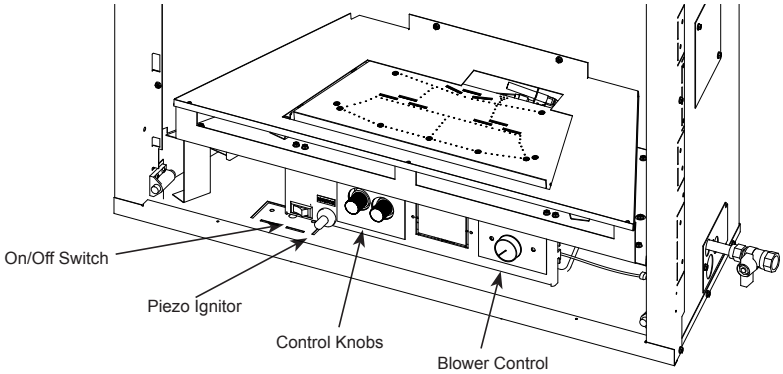

Millivolt Controls

TO TURN OFF GAS TO HEATER

1. Turn control knob clockwise ↷ to OFF position to completely shut off the heater.
2. If applicable: Turn ON/OFF switch to OFF position and/or set thermostat (if present) to lowest setting.
3. If applicable: Turn off all electric power to the heater.

MATCH LIGHTING INSTRUCTIONS

1. Remove any items necessary for easy access to the pilot (for example: logs, screens, etc.).
2. Follow appropriate lighting instructions found previously. Instead of pushing and releasing the piezo button, light a match and hold the flame to the end of the pilot and ignite the pilot.
3. After control knob has been released and pilot stays lit, reinstall any items that were removed for pilot access.
4. Call a qualified service technician for repair or replacement of the piezo ignitor.

BLOWER OPERATION

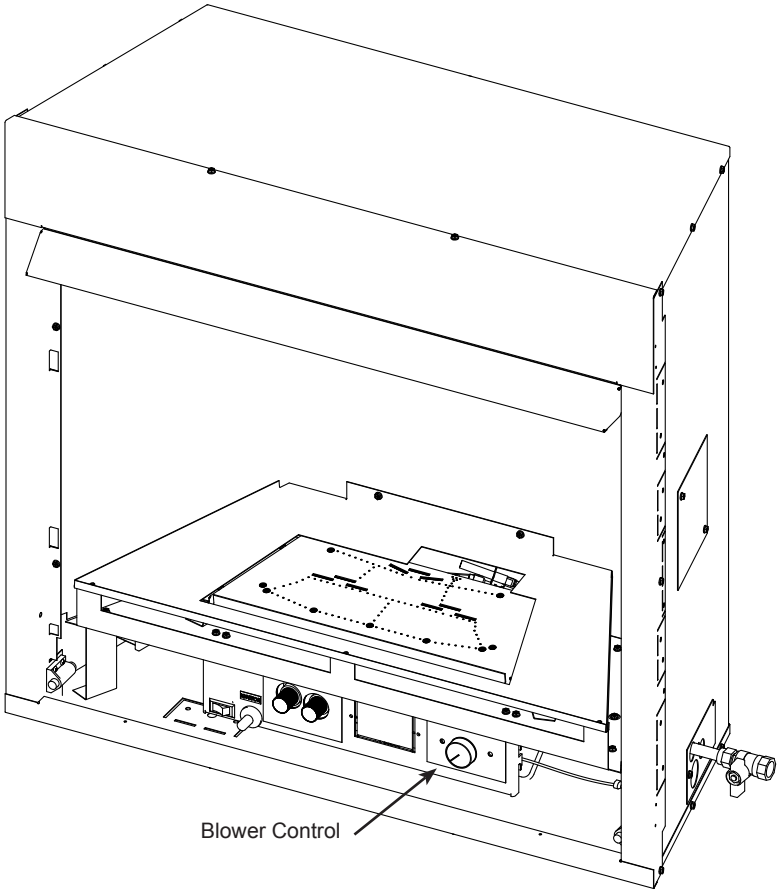

Figure 37. Location of Blower Control

Locate the blower control by opening control access door. The variable controlled thermostat blower is located to the right of heater controls. .

In the OFF position, the blower will not operate; however, the heater can be operated without the blower being ON. In the ON (AUTO) position, the blower will start when the thermostat senses a sufficient increase in firebox temperature.

NOTE: Your gas logs and blower will not turn on and off at the same time. The gas logs may burn several minutes before blower turns on. The blower will continue to run for several minutes after the flames have turned off.

WARNING: Turn off heater and allow to cool before cleaning. Disconnect electrical power before cleaning or servicing.

ANNUAL CLEANING/INSPECTION

Refer to parts diagram for location of items discussed below.

Annual inspection and cleaning by your dealer or qualified service technician is recommended to prevent malfunction and/or sooting.
Remove logs, handling carefully by holding gently at each end. Gloves are recommended. If skin becomes irritated, wash gently with soap and water. Refer to manual for correct log placement.

- Inspect and clean burner air intake holes. Remove lint or particles with vacuum, brush or pipe cleaners. Failure to keep air intake holes clean will result in sooting and poor combustion.
- Inspect and clean all burner ports.
- Inspect ODS pilot for operation and accumulation of lint at air intake holes.
- Verify flame pattern and log placement for proper operation.
- Verify smooth and responsive ignition of main burner and rear burner.

PERIODIC CLEANING

Refer to parts diagram for location of items discussed below.

- Do not use cleaning fluid to clean logs or any part of heater.
- Brush logs with soft bristle brush or vacuum with brush attachment.
- Vacuum loose particles and dust from the front and rear burner, control and piezo covers and grate weldment.
- Inspect and clean burner air intake holes. Remove lint or particles with vacuum, brush, or pipe cleaners. Failure to keep air intake holes clean will result in sooting and poor combustion.
- External case should be dusted and wiped with a wet soapy cloth.

FORCED AIR KIT

If you are installing the forced air kit (Models BLO24T or BLOT), see the installation instructions provided with the kit for electrical wiring requirements or the blower installation section.

Model VFC24 uses blower model BLO24T.
Model VFC32 uses blower model BLOT.

The firebox must be connected to main power supply at time of firebox installation. The blower must be installed prior to the installation of the unvented heater. The electrical connections must be made before the firebox is framed and enclosed in the finished walls.

INSTALLING OPTIONAL FIREBRICK PANELS

NOTE: Firebrick liner kits may be used only with the VFC vent free fireplace systems. Please verify the size and model number of your insert to be certain the kit you purchased is correct.

KIT CONTENTS:
- One (1) Center panel
- Two (2) self-drilling #8 screws
- One (1) Left panel
- Two (2) Brick retainer brackets
- One (1) Right panel

TOOLS REQUIRED:
Drill with 1/4" hex head or Phillips bit

INSTRUCTIONS:
1. Remove screen frame, stones, fireglass or logs (if applicable) per the VFC Installation and Operating Instructions.
2. Place rear ceramic firebrick panel against the center of the rear wall of the firebox. Place on rear log support bracket.
3. Place left and right ceramic firebrick panels against firebox sides and attach at the top with retainer bracket with supplied self drilling screws.
4. Replace fireglass, stones and/or logs as applicable and re-install screen frame.

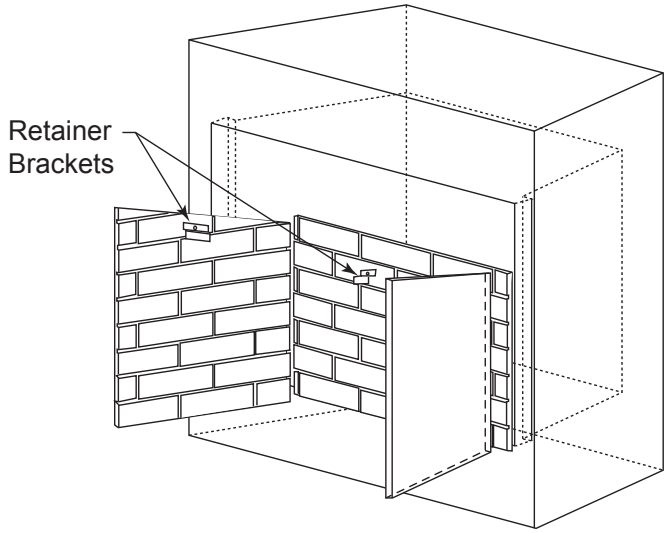

Figure 38. Install Side Firebrick Panel

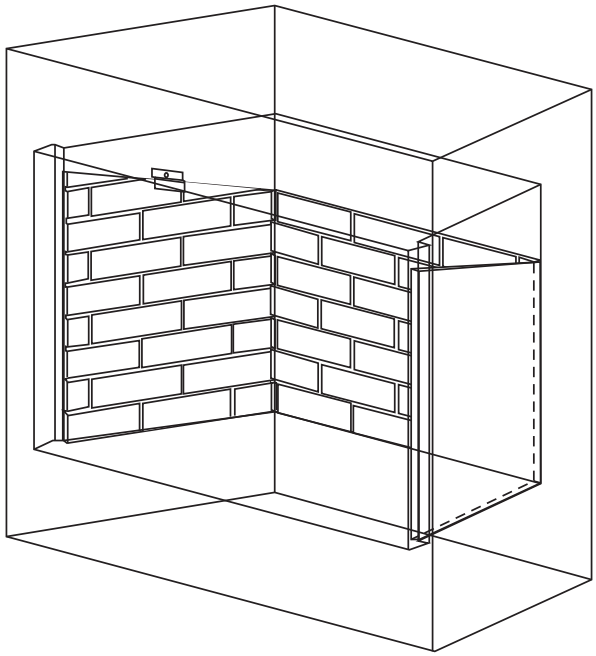

Figure 39. Install Back Firebrick Panel

INSTALLING OPTIONAL PORCELAIN PANELS

NOTE: Porcelain liner kits are approved for use with optional fireglass and log kits. These kits are designed to fit VFC vent free fireplace systems. Please verify the size and model number of your fireplace to be certain the kit you purchased is correct.

KIT CONTENTS:
- One (1) Right panel
- One (1) Left panel
- One (1) Rear panel
- Four (4) Self-drilling #8 screws

INSTALLATION INSTRUCTIONS:
1. Remove screen frame, stones, fireglass or logs (if applicable).
2. Place rear panel against the center of the rear wall of the firebox.
3. Place left and right panels against firebox sides and attach top flanges of the panels using self-drilling screws provided.
4. Replace fireglass or logs as applicable and re-install screen frame.

INSTALLING OPTIONAL BLACK MAGIC PANELS

NOTE: Black Magic glass liner kits are approved for use with optional fireglass and log kits. These kits are designed to fit VFC vent free fireplace systems. Please verify the size and model number of your fireplace to be certain the kit you purchased is correct.

KIT CONTENTS:
- One (1) Center panel
- One (1) Left panel
- One (1) Right panel
- Two (2) Glass retainer brackets
- Two (2) Self drilling #8 screws

INSTALLATION INSTRUCTIONS:
1. Remove screen frame, fireglass or logs (if applicable).
2. NOTE: All panels will be installed with the dimples in the glass facing the firebox.
   Place rear glass liner panel against the center of the rear wall of the firebox.
3. Place left and right glass liner panels against firebox sides and attach at the top with retainer bracket using supplied screws.
4. Replace fireglass or logs as applicable and re-install screen frame.

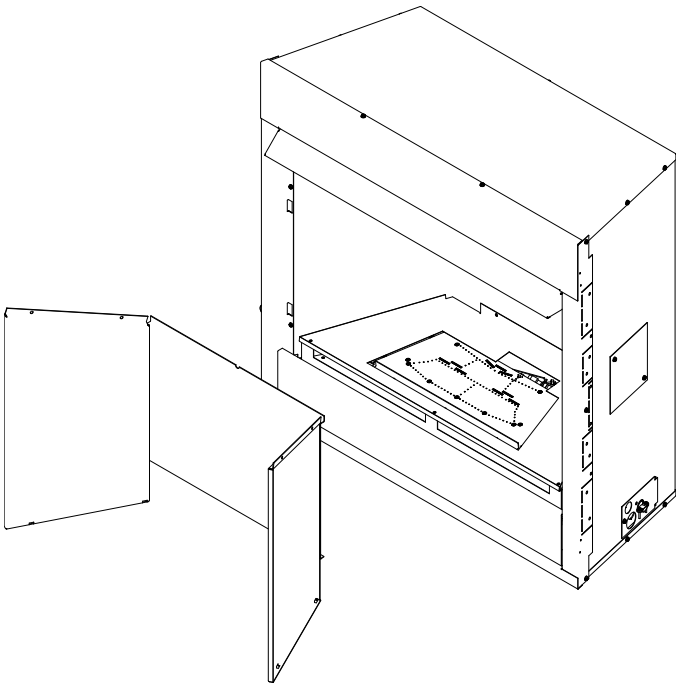

Figure 40. Install Porcelain Panels

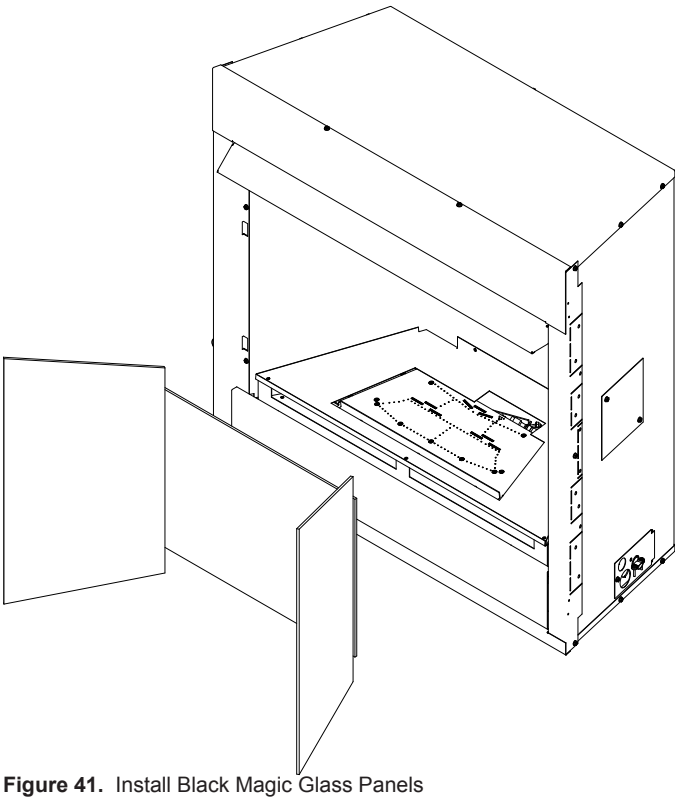

Figure 41. Install Black Magic Glass Panels

WARNING: Turn appliance OFF and allow to cool before servicing. Only a qualified service person should service and repair the heater.

NOTE: All troubleshooting items are listed in order of operation.

OBSERVED PROBLEM	POSSIBLE CAUSE	SOLUTION
When ignitor button is pressed, there is no spark at ODS/pilot.	1. Ignitor electrode positioned wrong. 2. Ignitor electrode is broken. 3. Ignitor electrode not connected to ignitor cable. 4. Ignitor cable pinched or wet. Keep ignitor cable dry. 5. Broken ignitor cable. 6. Bad piezo ignitor.	1 Replace ignitor. 2. Replace ignitor. 3. Reconnect ignitor cable. 4. Free ignitor cable if pinched by any metal or tubing. 5. Replace ignitor cable. 6. Replace piezo ignitor.
Appliance produces unwanted odors.	1. Appliance burning vapors from paint, hair spray, glues, etc. 2. Gas leak. 3. Initial burn off.	1. Ventilate room. Stop using odor causing products while heater is running. 2. Locate and correct all leaks. 3. Ventilate room and turn unit on high until odor is gone. Odor should be gone after 6 hours of continuous use.
Appliance shuts off during use.	1. Not enough fresh air is available for ODS/ pilot to operate. 2. Low line pressure. 3. ODS/pilot is partially clogged. 4. Defective Thermopile. 5. Restrictions in incoming air flow	1. Open window and/or door for ventilation. 2. Contact local gas company. 3. Clean ODS/pilot. 4. Check pilot flame, check wire connections, check output, should be 325 millivolts across TH/TP and TP Terminals with ON/OFF switches off. 5. Check for bottom riser on glass door, sunken fireplace, excessive lava rock/cinders densely packed against grate.
Gas odor even when control knob is in OFF position.	1. Gas leak. 2. Control valve defective.	1. Locate and correct all leaks. 2. Replace control valve.
When ignitor button is pressed, there is spark at ODS pilot, but no ignition.	1. Gas supply turned off or manual shutoff valve closed. 2. Control knob not in PILOT position. 3. Control knob not pressed in while in PILOT position. 4. Air in gas lines when installed. 5. ODS/pilot is clogged. 6. Gas regulator setting is not correct.	1. Turn on gas supply or open manual shutoff valve. 2. Turn control knob to PILOT position. 3. Press in control knob while in PILOT position. 4. Continue holding down control knob. Repeat igniting operation until air is removed. 5. Replace ODS/pilot assembly or get it serviced. 6. Replace gas regulator.

continued on following page

OBSERVED PROBLEM	POSSIBLE CAUSE	SOLUTION
ODS/pilot lights, but flame goes out when control knob is released.	1. Control knob not fully pressed in. 2. Control knob not pressed in long enough. 3. Manual shutoff valve not fully open. 4. Thermocouple connection loose at control valve. 5. Pilot flame not touching thermocouple, which allows thermocouple to cool, causing pilot flame to go out. This problem could be caused by either low gas pressure, or a dirty or partially clogged ODS/pilot. 6. Thermocouple damaged. 7. Control valve damaged.	1. Press in control knob fully. 2. After ODS/pilot lights, keep control knob pressed in for 30 seconds. 3. Fully open manual shutoff valve. 4. Hand tighten thermocouple connection until snug, then tighten 1/4 turn more. 5a. Contact local gas company. 5b. Clean pilot with vacuum cleaner. 6. Replace thermocouple. 7. Replace control valve.
Burner does not light after ODS/pilot is lit.	1. Burner orifice is clogged. 2. Burner orifice diameter is too small. 3. Inlet gas pressure is too low.	1. Clean orifice. 2. Replace burner orifice. 3. Contact qualified service person.
Burner backfires during combustion.	1. Manifold pressure is too low. 2. Burner orifice is clogged.	1. Contact local gas company. 2. Clean burner or replace burner orifice.
Slight smoke or odor during initial operation.	1. Burner orifice is clogged or damaged. 2. Burner is damaged. 3. Gas regulator defective.	1. Clean burner or replace burner orifice. 2. Replace burner. 3. Replace gas regulator.
Logs appear to smoke after initial operation.	1. Vapors from paint or curing process of logs. 2. Vapors or smoke continue after heater is run with damper or window open for several hours.	1. Problem will stop after a few hours of operation. Run the heater with the damper open if you have one, or open a window for the first few hours. 2. Log heater is intended to be smokeless. Turn OFF heater and call qualified service person.
Heater produces a whistling noise when burner is lit.	1. Turning control knob to HIGH position when burner is cold. 2. Air in gas line. 3. Dirty or partially clogged burner orifices.	1. Turn control knob to LOW position and let warm up for a minute. 2. Operate burner until air is removed from line. Have gas line checked by local gas company. 3. Clean burner or replace burner orifice.
No gas to pilot.	1. LP-regulator shut down due to inlet pressure too high.	1. Verify LP tank regulator is installed and set at 11" to 13" w.c. 2. Replace regulator on heater.
Blower does not work.	1. Power cord not plugged in. 2. Loose wire connections. 3. Defective blower thermostat.	1. Plug power cord into junction box found in lower access level. 2. Check wire connections, reconnect if loose. 3. Replace thermostat.

WARNING: If the gas quality is bad, your pilot may not stay lit, the burners may produce soot and the heater may backfire when lit. If the gas quality or pressure is low, contact your local gas supplier immediately.

WARNING: Failure to position the parts in accordance with these diagrams or failure to use only parts specifically approved with this appliance may result in property damage or personal injury.

IPI SYSTEM

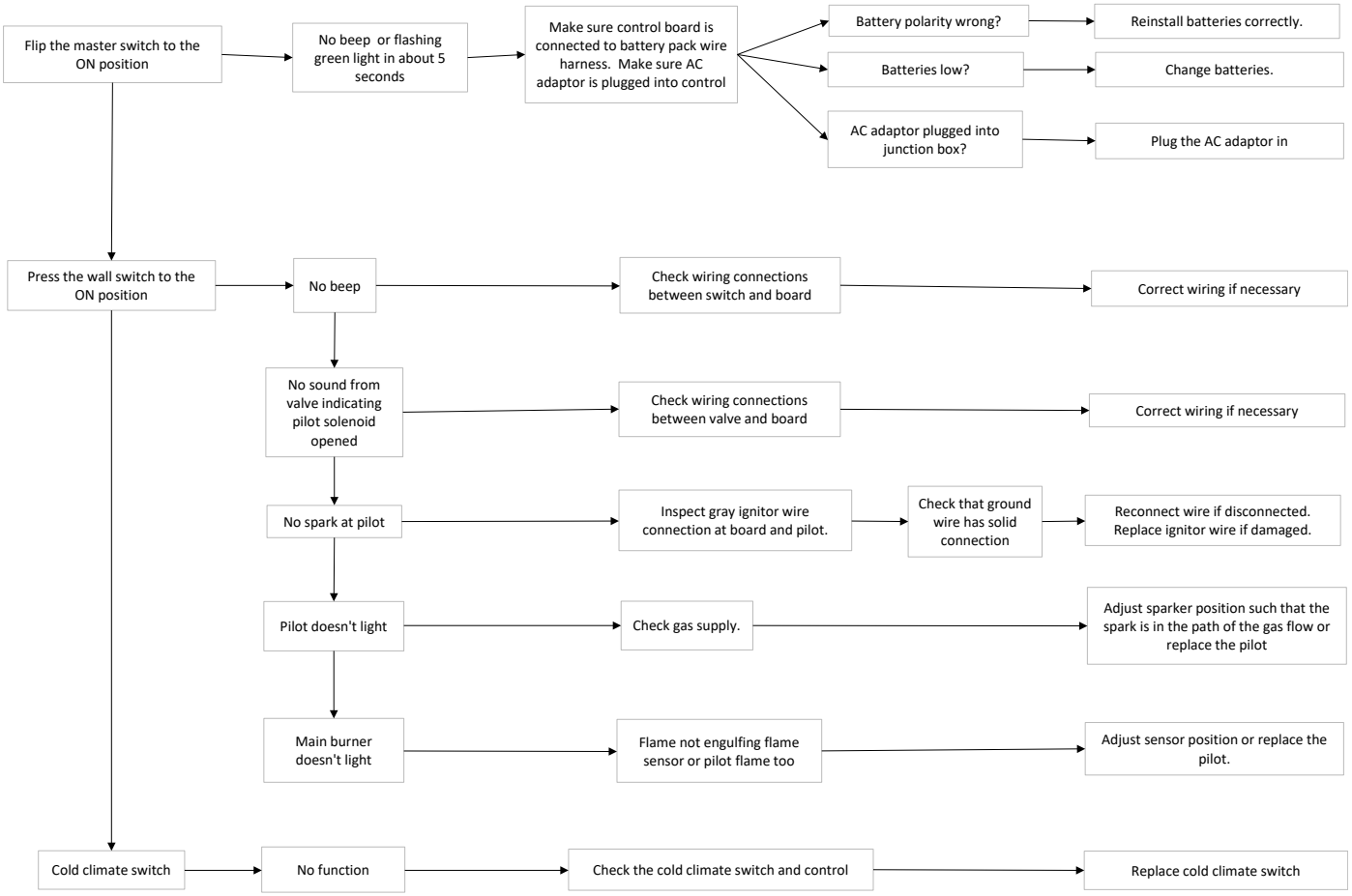
Flip the master switch to the ON position
No beep or flashing green light in about 5 seconds
Make sure control board is connected to battery pack wire harness. Make sure AC adaptor is plugged into control
Battery polarity wrong?
Reinstall batteries correctly.
Batteries low?
Change batteries.
AC adaptor plugged into junction box?
Plug the AC adaptor in
Press the wall switch to the ON position
No beep
Check wiring connections between switch and board
Correct wiring if necessary
No sound from valve indicating pilot solenoid opened
Check wiring connections between valve and board
Correct wiring if necessary
No spark at pilot
Inspect gray ignitor wire connection at board and pilot.
Check that ground wire has solid connection
Reconnect wire if disconnected. Replace ignitor wire if damaged.
Pilot doesn't light
Check gas supply.
Adjust sparker position such that the spark is in the path of the gas flow or replace the pilot
Main burner doesn't light
Flame not engulfing flame sensor or pilot flame too
Adjust sensor position or replace the pilot.
Cold climate switch
No function
Check the cold climate switch and control
Replace cold climate switch

VFC FIREBOX PARTS

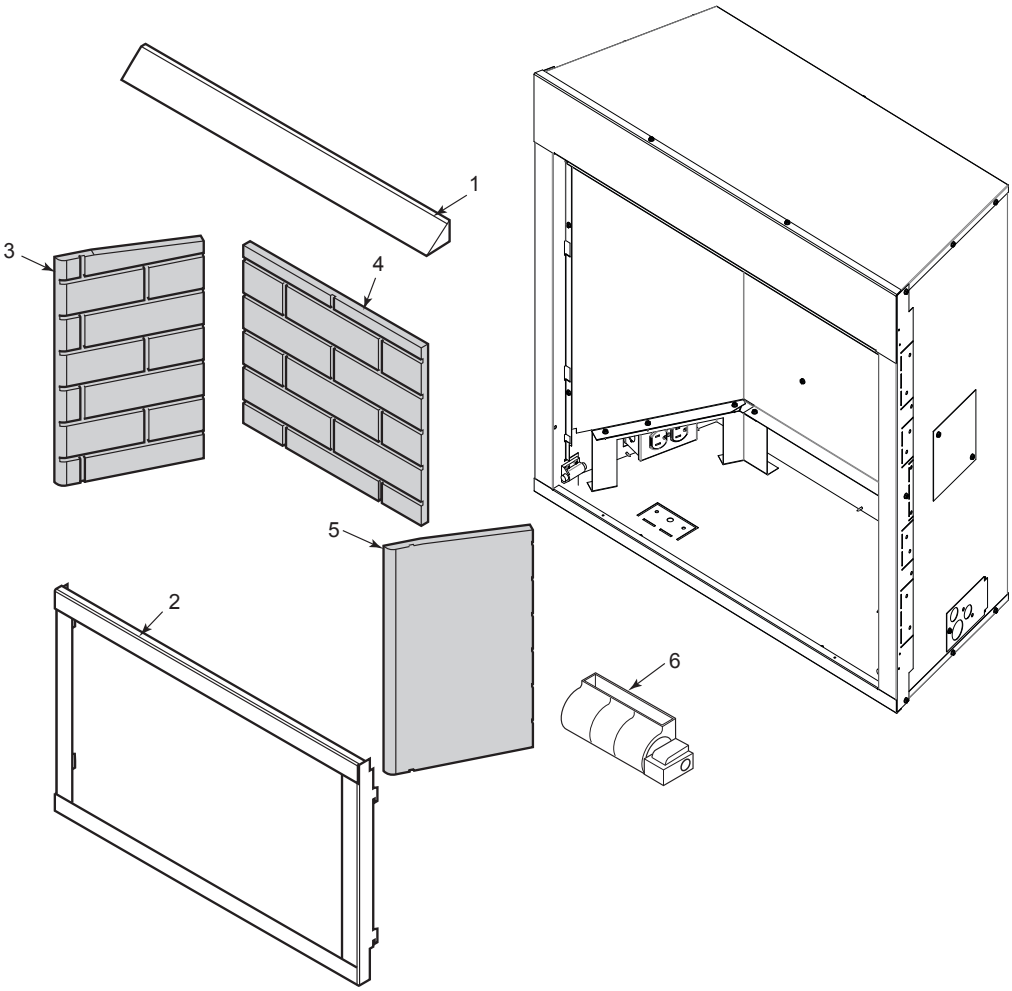

REF.	DESCRIPTION	QTY	VFC24		VFC32	
1.	CANOPY	1	20308038K		20307978K	
2.	SCREEN ASSEMBLY	1	20308061K		20307979K	
3.	LEFT FIREBRICK (OPTIONAL)	1	20308191K (CINNAMON)	20307935K (COLONIAL RED)	20307926K (CINNAMON)	20307929K (COLONIAL RED)
4.	CENTER FIREBRICK (OPTIONAL)	1	20308190K (CINNAMON)	20307934K (COLONIAL RED)	20307925K (CINNAMON)	20307928K (COLONIAL RED)
5.	RIGHT FIREBRICK (OPTIONAL)	1	20308192K (CINNAMON)	20307936K (COLONIAL RED)	20307927K (CINNAMON)	20307930K (COLONIAL RED)
6.	BLOWER (OPTIONAL)	1	BLOT24T		BLOT	
N/A	LEFT PORCELAIN PANEL (OPTIONAL)	1	20307939K		20307814K	
N/A	CENTER PORCELAIN PANEL (OPTIONAL)	1	20307937K		20307812K	
N/A	RIGHT PORCELAIN PANEL (OPTIONAL)	1	20307938K		20307813K	
N/A	LEFT BLACK MAGIC GLASS PANEL (OPTIONAL)	1	20307944K		20307941K	
KN/A	CENTER BLACK MAGIC GLASS PANEL (OPTIONAL)	1	20307943K		2030794K	
N/A	RIGHT BLACK MAGIC GLASS PANEL (OPTIONAL)	1	20307945K		20307942K	

WARNING: Failure to position the parts in accordance with these diagrams or failure to use only parts specifically approved with this appliance may result in property damage or personal injury.

VFC24 MILLIVOLT BURNER PARTS

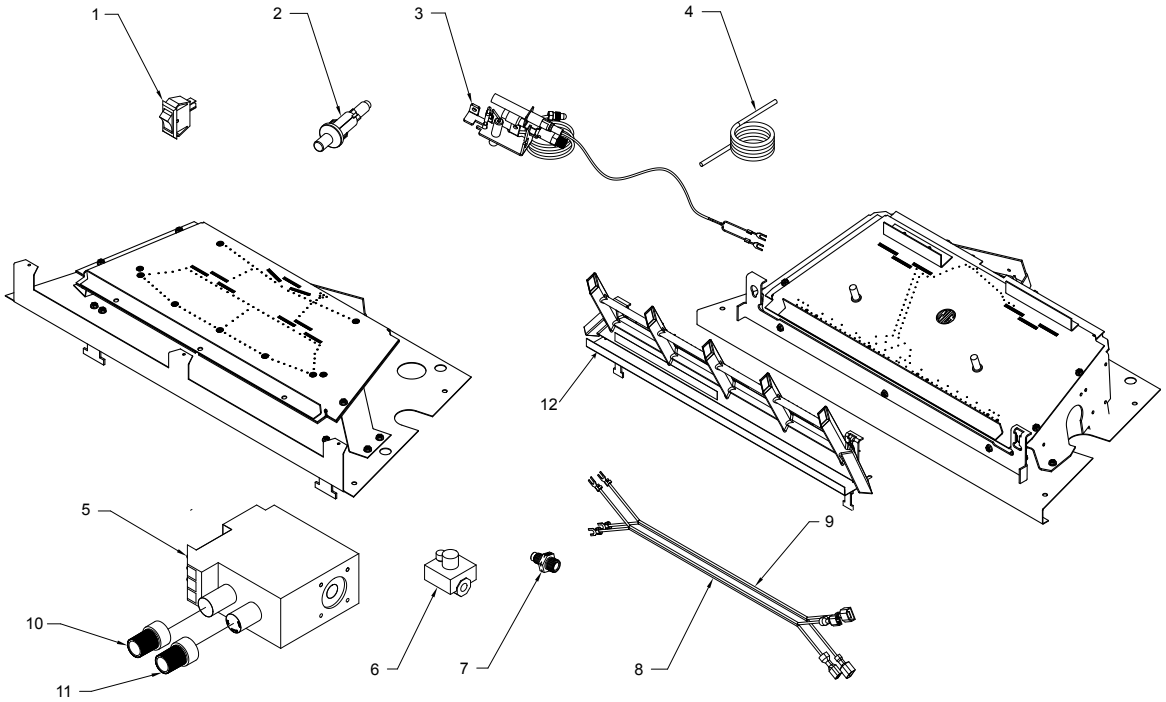

REF	DESCRIPTION	QTY	VFC24CNV	VFC24CPV	VFC24LNV	VFC24LPV
1	On/Off Switch	1	32D0232	32D0232	32D0232	32D0232
2	Piezo Ignitor	1	14D0503	14D0503	14D0503	14D0503
3	ODS Pilot Assembly	1	14D0473	14D0477	14D0473	14D0477
4	Piezo Wire	1	00K0632	00K0632	00K0632	00K0632
5	Control Valve	1	14D0467	14D0468	14D0467	14D0468
6	Pilot Regulator	1	14D0469	N/A	14D0469	N/A
7	Burner Injector	1	20H3155	33D4046	20H3155	33D4046
8	Female Valve/Switch Wire	1	44D0500	44D0500	44D0500	44D0500
9	Male Valve/Switch Wire	1	44D0501	44D0501	44D0501	44D0501
10	Knob Extender 1.5" Hi/Low	1	37D0011	37D0011	37D0011	37D0011
11	Knob Extender 1.5" On/Off	1	37D0010	37D0010	37D0010	37D0010
12	Front Grate Assembly	1	20304325	20304325	20304325	20304325
	3/16 Valve to Reg Tube	1	20308265K		20308265K	
	3/16 Valve to Pilot Tube	1		20308225K		
ACCESSORIES						
Flex Connector		FLEXCON18				
Wall Switch Kit		MVWS				
Hand Held Remote		RCB				
Hand Held Thermostat Remote		TSST				
Thermostat Sensor Kit		TS				
Rock Wool		81D2011 (TRADITIONAL ONLY)				

WARNING: Failure to position the parts in accordance with these diagrams or failure to use only parts specifically approved with this appliance may result in property damage or personal injury.

VFC24 IPI BURNER PARTS

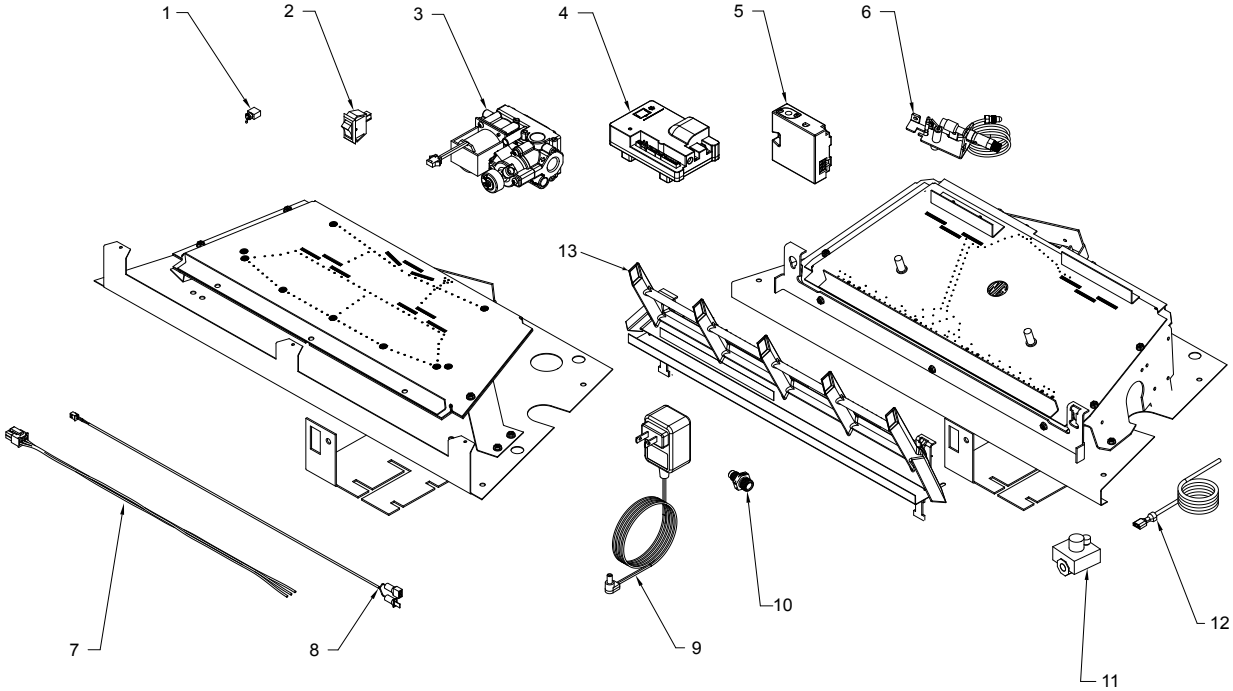

REF	DESCRIPTION	QTY	VFC24CNI	VFC24CPI	VFC24LNI	VFC24LPI
1	Cold Climate Switch	1	95E0111	95E0111	95E0111	95E0111
2	On/Off Switch	1	32D0232	32D0232	32D0232	32D0232
3	Gas Valve	1	20307838K	20307839K	20307838K	20307839K
4	Control Box	1	95E0100	95E0100	95E0100	95E0100
5	ODS Module	1	20303179	20303179	20303179	20303179
6	ODS Pilot Assembly	1	26D2529	14D0476	26D2529	14D0476
7	ODS Module Wire	1	20301890	20301890	20301890	20301890
8	Control to ODS Module Wire	1	SRV4604-304	SRV4604-304	SRV4604-304	SRV4604-304
9	A/C Adapter	1	95E0105	95E0105	95E0105	95E0105
10	Burner Injector	1	20H3155	33D4046	20H3155	33D4046
11	Pilot Regulator	1	14D0469	N/A	14D0469	N/A
12	Piezo Wire	1	20303256K	20303256K	20303256K	20303256K
13	Front Grate Assembly	1	20304325	20304325	20304325	20304325
14	3/16 Valve to Pilot Tube (not shown)	1		20308254K		20308254K
15	Wire On/Off to Control Board (not shown)	1	SRV95E0106	SRV95E0106	SRV95E0106	SRV95E0106

ACCESSORIES	
Wall Switch Kit	MVWS
Hand Held Remote	RCB
Hand Held Thermostat Remote	TSST
Thermostat Sensor Kit	TS
Rock Wool	81D2011 (TRADITIONAL ONLY)

WARNING: Failure to position the parts in accordance with these diagrams or failure to use only parts specifically approved with this appliance may result in property damage or personal injury.

VFC32 MILLIVOLT BURNER PARTS

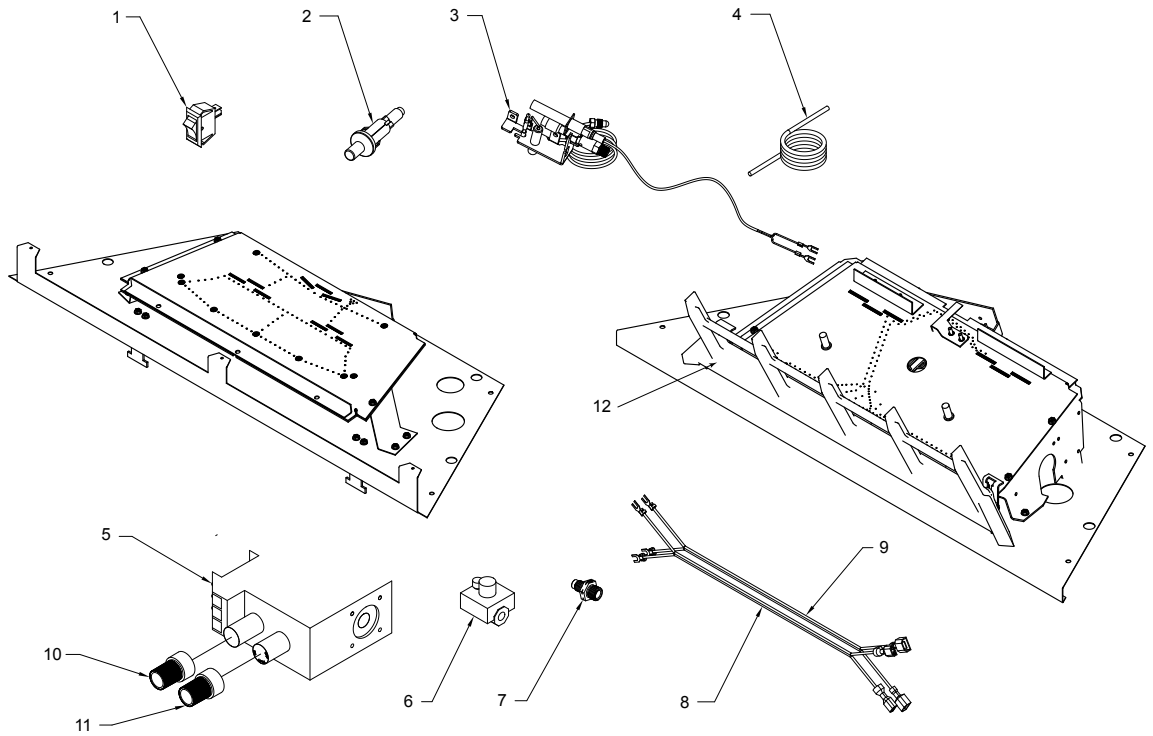

REF	DESCRIPTION	QTY	VFC32CNV	VFC32CPV	VFC32LNV	VFC32LPV
1	On/Off Switch	1	32D0232	32D0232	32D0232	32D0232
2	Piezo Ignitor	1	14D0503	14D0503	14D0503	14D0503
3	ODS Pilot Assembly	1	14D0473	14D0477	14D0473	14D0477
4	Piezo Wire	1	00K0632	00K0632	00K0632	00K0632
5	Control Valve	1	14D0467	14D0468	14D0467	14D0468
6	Pilot Regulator	1	14D0469	N/A	14D0469	N/A
7	Burner Injector	1	33D5040	58D0052	33D5040	58D0052
8	Female Valve/Switch Wire	1	44D0500	44D0500	44D0500	44D0500
9	Male Valve/Switch Wire	1	44D0501	44D0501	44D0501	44D0501
10	Knob Extender 1.5" Hi/Low	1	37D0011	37D0011	37D0011	37D0011
11	Knob Extender 1.5" On/Off	1	37D0010	37D0010	37D0010	37D0010
12	Front Grate Assembly	1	20304325	20304325	20304325	20304325
	3/16 Valve to Reg Tube	1	20308265K		20308025K	

ACCESSORIES	
Flex Connector	FLEXCON18
Wall Switch Kit	MVWS
Hand Held Remote	RCB
Hand Held Thermostat Remote	TSST
Thermostat Sensor Kit	TS
Rock Wool	81D2011 (TRADITIONAL ONLY)

WARNING: Failure to position the parts in accordance with these diagrams or failure to use only parts specifically approved with this appliance may result in property damage or personal injury.

VFC32 IPI BURNER PARTS

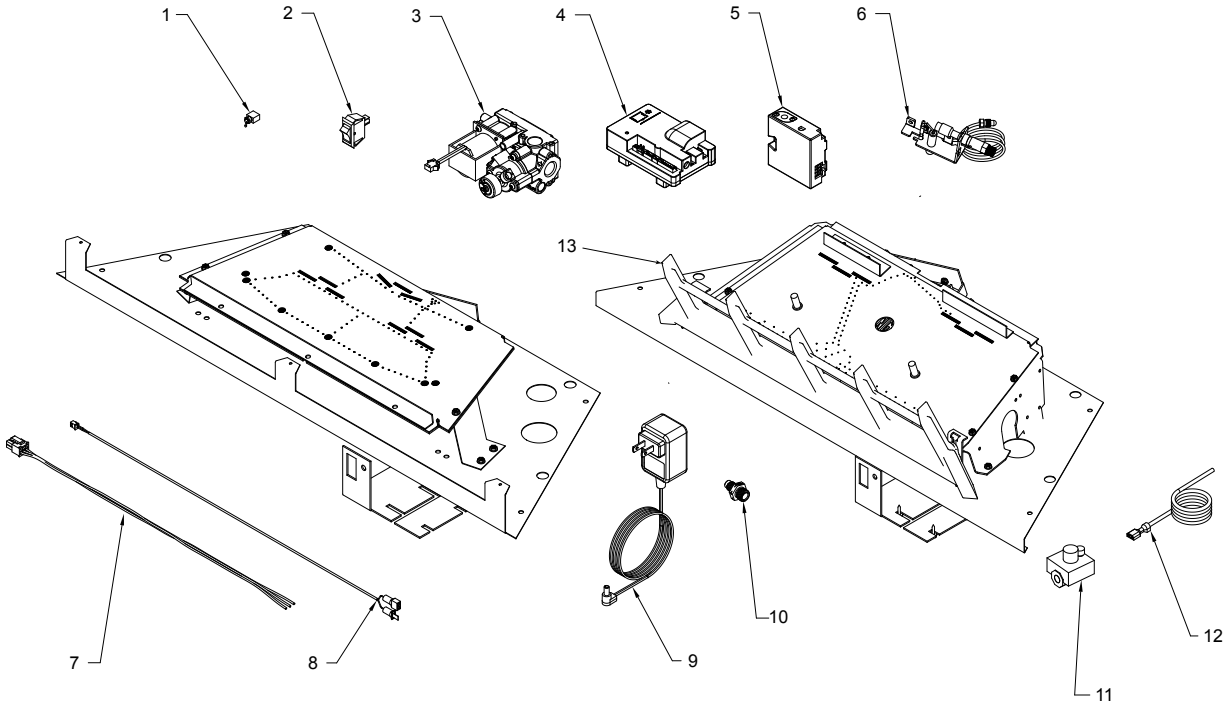

REF	DESCRIPTION	QTY	VFC32CNI	VFC32CPI	VFC32LNI	VFC32LPI
1	Cold Climate Switch	1	95E0111	95E0111	95E0111	95E0111
2	On/Off Switch	1	32D0232	32D0232	32D0232	32D0232
3	Gas Valve	1	20307838K	20307839K	20307838K	20307839K
4	Control Box	1	95E0100	95E0100	95E0100	95E0100
5	ODS Module	1	20303179	20303179	20303179	20303179
6	ODS Pilot Assembly	1	26D2529	14D0476	26D2529	14D0476
7	ODS Module Wire	1	20301890	20301890	20301890	20301890
8	Control to ODS Module Wire	1	SRV4604-304	SRV4604-304	SRV4604-304	SRV4604-304
9	A/C Adapter	1	95E0105	95E0105	95E0105	95E0105
10	Burner Injector	1	33D5040	58D0052	33D5040	58D0052
11	Pilot Regulator	1	14D0469	N/A	14D0469	N/A
12	Piezo Wire	1	20303256K	20303256K	20303256K	20303256K
13	Front Grate Assembly	1	20304325	20304325	20304325	20304325
14	3/16 Valve to Pilot Tube (not shown)	1		20308254K		20308254K
15	Wire On/Off to Control Board (not shown)	1	SRV95E0106	SRV95E0106	SRV95E0106	SRV95E0106
ACCESSORIES						
Wall Switch Kit		MVWS				
Hand Held Remote		RCB				
Hand Held Thermostat Remote		TSST				
Thermostat Sensor Kit		TS				
Rock Wool		81D2011 (TRADITIONAL ONLY)				

WARNING: Failure to position the parts in accordance with these diagrams or failure to use only parts specifically approved with this appliance may result in property damage or personal injury.

REPLACEMENT LOGS

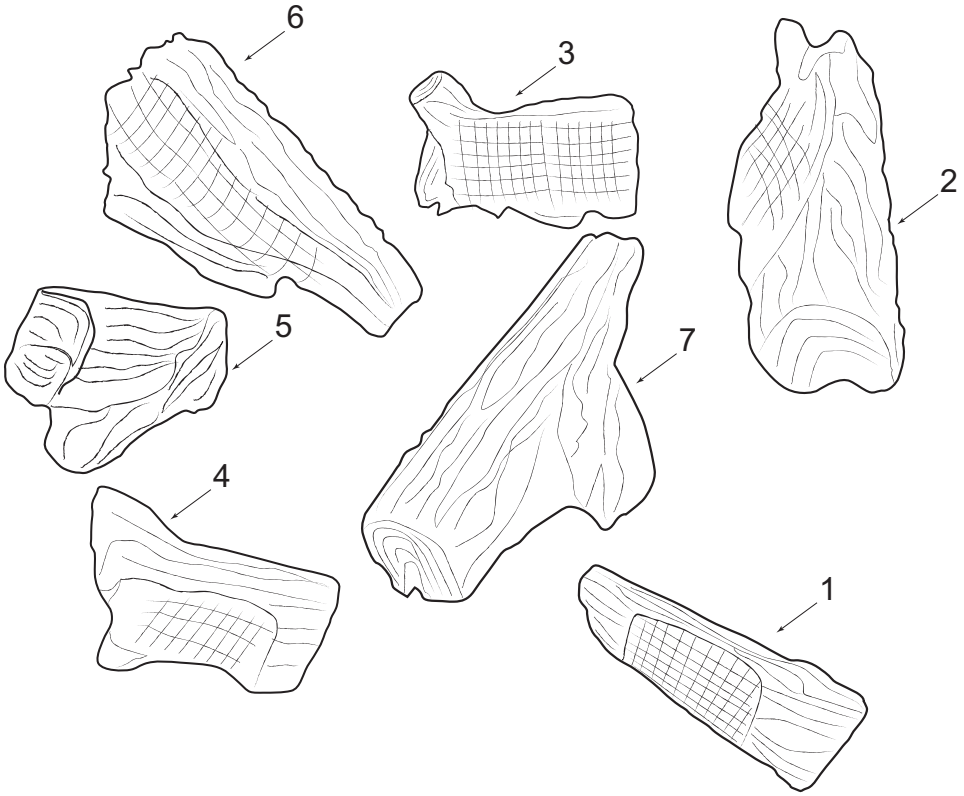

REF	QUANTITY	VFC24 AND VFC32 REPLACEMENT PART NO.
LOG # 1	1	20308256K
LOG # 2	1	20308257K
LOG # 3	1	20308258K
LOG # 4	1	20308259K
LOG # 5	1	20308260K
LOG # 6	1	20308261K
LOG # 7	1	20308262K

WARNING: Failure to position the parts in accordance with these diagrams or failure to use only parts specifically approved with this appliance may result in property damage or personal injury.

Hearth & Home Technologies LLC

LIMITED WARRANTY

Hearth & Home Technologies LLC ("HHT") extends the following warranty for HHT gas, wood, pellet and electric hearth appliances (each a "Product" and collectively, the "Product(s)") and certain component parts set forth in the table below ("Component Part(s)") that are purchased from a HHT authorized dealer or distributor.

WARRANTY COVERAGE:

HHT warrants that the Products and their Component Parts will be free from defects in materials and workmanship for the applicable period of Warranty coverage set forth in the table below ("Warranty Period"). If a Product or Component Parts are found to be defective in materials or workmanship during the applicable Warranty Period, HHT will, at our discretion, repair the applicable Component Part(s), replace the applicable Component Part(s), or refund the purchase price of the applicable Product(s). The maximum amount recoverable under this Warranty is limited to the purchase price of the Product. This Warranty is transferable from the original purchaser to subsequent owners, but the Warranty Period will not be extended in duration or expanded in coverage for any such transfer. This Warranty is subject to conditions, exclusions, and limitations as described below.

WARRANTY PERIOD:

Warranty coverage begins at the date of installation. In the case of new home constructions, Warranty coverage begins six months after invoice of the final sale of the Product(s) by an independent, authorized HHT dealer or distributor. However, the Warranty coverage shall commence no later than 24 months following the date of Product shipment from HHT, regardless of the installation or purchase date.

Warranty Period		HHT Manufactured Appliances and Venting				
Component Parts	Labor	Gas	Pellet	Wood	Electric	Component Parts Covered by this Warranty
1 Year		X	X	X		All parts including handles, external enameled components and other material except as covered by Warranty Conditions, Warranty Exclusions, and Warranty Limitations listed
2 Years					X	All parts except as covered by Warranty Conditions, Warranty Exclusions, and Warranty Limitations listed
			X	X		Glass, Electrical components limited to heating element/igniters, Top feed auger assembly, Blowers, Junction Box, Remotes/Wall switches, linear actuator, power cord, vacuum switch, snap disc, wire harnesses and thermocouple
		X				Electrical components limited to modules, remotes/wall switches, valves, pilots, blowers, junction boxes, wire harnesses, transformers and lights (excluding light bulbs)
		X		X		Cement Refractory Panels, Glass Liner Panels
3 years			X			Firepots, burnpots, Harman mechanical feeders
5 years		X		X		Catalysts, Vented and Vent Free burners and logs
10 years	1 year	X				Burners, logs and metal/fiber refractory components of HHT manufactured fireplaces or stoves, venting due to poor workmanship
10 years	3 years		X	X		Castings, Medallions & Baffles, FlexBurn® System (engine, inner cover, access cover and fireback), Firebox and heat exchanger, HHT Chimney & Terminations, Manifolds
20 years	3 years	X				Firebox and heat exchanger
All purchased replacement parts and optional accessories						
1 Year	None	X	X	X	X	All purchased replacement parts and optional accessories

4021-645N 12/23

Page 1 of 2

WARRANTY CONDITIONS:

- Because HHT cannot control the quality of any Products sold by unauthorized sellers, this Warranty only covers Products that are purchased through an HHT authorized dealer or distributor unless otherwise prohibited by law; a list of HHT authorized dealers is available on the HHT branded websites.
- This Warranty is only valid while the applicable Product remains at the site of original installation.
- This Warranty is only valid in the country in which the HHT authorized dealer or distributor that sold the applicable Product is authorized to sell applicable Product.
- Contact your installing distributor or dealer for Warranty service. If the installing dealer or distributor is unable to provide necessary parts, contact the nearest HHT authorized dealer or supplier. Additional service fees may apply if you are seeking Warranty service from a dealer other than the dealer from whom you originally purchased the applicable Product.
- No HHT consumer should bear cost of warranty service or costs incurred while servicing warranty claims (i.e., travel, gas, or mileage) when the service is performed within the terms of this Warranty. Check with your dealer or distributor in advance for any costs to you when arranging a warranty call. Travel and shipping charges for parts are not covered by this Warranty.

WARRANTY EXCLUSIONS:

This Warranty does not cover the following:

- Changes in surface finishes as a result of normal use. As a heating appliance, some changes in color of interior and exterior surface finishes may occur. This is not a flaw and is not covered under the Warranty.
- Damage to printed, plated, or enameled surfaces caused by fingerprints, accidents, misuse, scratches, melted items or other external sources and residues left on the plated surfaces from the use of abrasive cleaners or polishes.
- Repair or replacement of parts that are subject to normal wear and tear during the Warranty Period are not covered. These parts include: paint, wood and pellet gaskets, firebricks, wood grates, flame guides, batteries and the discoloration of glass.
- Minor expansion, contraction, or movement of certain parts causing noise. These conditions are normal and complaints related to this noise are not covered by this Warranty.
- Damages resulting from: (1) failure to install, operate, or maintain the applicable Product in accordance with the installation instructions, operating instructions, and listing agent identification label furnished with the applicable Product; (2) failure to install the applicable Product in accordance with local building codes; (3) shipping or improper handling; (4) improper operation, abuse, misuse, continued operation with damaged, corroded or failed components, accident, or improperly/incorrectly performed repairs; (5) environmental conditions, inadequate ventilation, negative pressure, or drafting caused by tightly sealed constructions, insufficient make-up air supply, or handling devices such as exhaust fans or forced air furnaces or other such causes; (6) use of fuels other than those specified in the operation instructions; (7) installation or use of components not supplied with the applicable Product or any other components not expressly authorized and approved by HHT; (8) modification of the appliance not expressly authorized and approved by HHT in writing; and/or (9) interruptions or fluctuations of electrical power supply to the applicable Product.
- Non-HHT venting components, hearth connections or other accessories used in conjunction with the applicable Product.
- Any part of a pre-existing fireplace system in which an insert or a decorative gas applicable Product is installed.
- HHT's obligation under this Warranty does not extend to the Product's capability to heat the desired space. Information is provided to assist the consumer and the dealer in selecting the proper Product for the application. Consideration must be given to the Product location and configuration, environmental conditions, insulation and air tightness of the structure.

This warranty is void if:

- The applicable Product has been over-fired, operated in atmospheres contaminated by chlorine, fluorine, or other damaging chemicals. Over-firing can be identified by, but not limited to, warped plates or tubes, deformation/warping of interior cast iron structure or components, rust colored cast iron, bubbling, cracking and discoloration of steel or enamel finishes.
- The applicable Product is subjected to prolonged periods of dampness or condensation.
- There is any damage to the applicable Product due to water or weather damage which is the result of, but not limited to, improper chimney or venting installation.

LIMITATIONS OF REMEDIES AND LIABILITY:

- **EXCEPT TO THE EXTENT PROVIDED BY LAW, HHT MAKES NO EXPRESS WARRANTIES OTHER THAN THE WARRANTY SPECIFIED HEREIN. The owner's exclusive remedy and HHT's sole obligation under this Warranty or in contract, tort or otherwise, shall be limited to, at HHT's sole option, replacement of the Component Part(s), repair of the Component Part(s), or refund of the original purchase price of the applicable Product(s). In no event will HHT be liable for any incidental or consequential damages caused by defects in the applicable Product. Some States do not allow the exclusion or limitation of incidental or consequential damages, so the above limitation or exclusion may not apply to you. This Warranty gives you specific legal rights and you may also have other rights which vary from State to State. THE DURATION OF ANY IMPLIED WARRANTY IS LIMITED TO DURATION OF THE EXPRESSED WARRANTY SPECIFIED ABOVE FOR THE APPLICABLE PRODUCT. Some States do not allow limitations on how long an implied warranty lasts, so the above limitation may not apply to you.**

MONESSEN

LOVE AT FIRST LIGHT

Monessen, a brand of Hearth & Home Technologies
7571 215th Street West, Lakeville, MN 50044
www.monessenhearth.com